CITY OF SARATOGA
PUBLIC WORKS DEPARTMENT

PROJECT PLANS FOR CONSTRUCTION OF
ACCESSIBLE INTERSECTION UPGRADES
PHASE 1
IN SANTA CLARA COUNTY
IN THE CITY OF SARATOGA, CALIFORNIA

TO BE SUPPLEMENTED BY STATE OF CALIFORNIA DEPARTMENT OF TRANSPORTATION STANDARD PLANS DATED MAY 2006

INDEX OF PLANS

SHEET No.	SHEET DESCRIPTION
1	TITLE AND LOCATION MAP
2 – 7	LAYOUT
8 – 13	DRAINAGE PLAN
14 – 19	ELECTRICAL PLAN

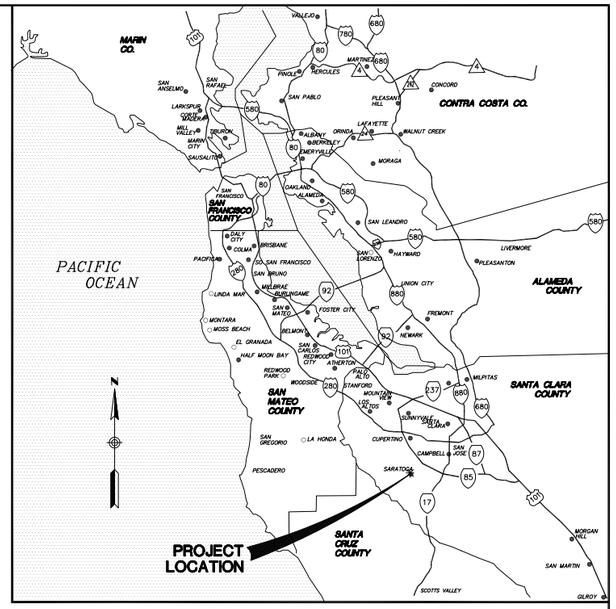

LOCATION MAP

INTERSECTION LIST

1. LOCATION 1: SARATOGA SUNNYVALE ROAD – REID LANE
2. LOCATION 2: SARATOGA SUNNYVALE ROAD – HERRIMAN AVENUE
3. LOCATION 3: SARATOGA SUNNYVALE ROAD – BLAUER DRIVE
4. LOCATION 4: SARATOGA SUNNYVALE ROAD – PIERCE ROAD
5. LOCATION 5: SARATOGA SUNNYVALE ROAD – COX AVENUE
6. LOCATION 6: SARATOGA SUNNYVALE ROAD – SEAGULL WAY

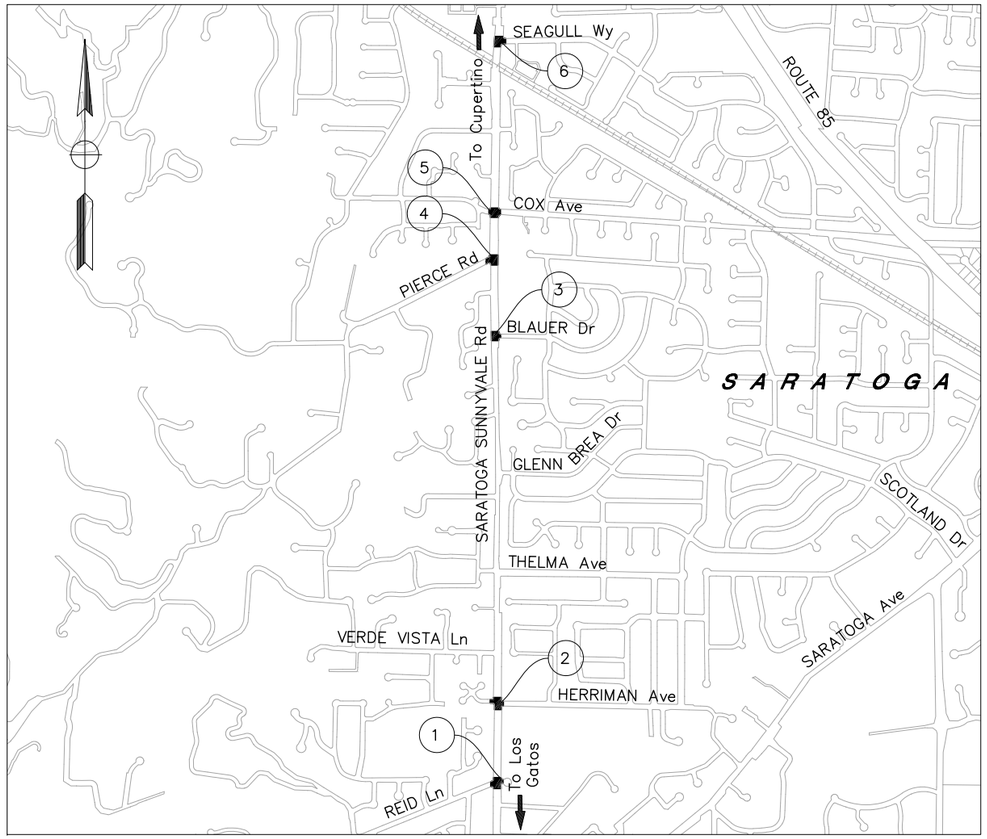

SITE MAP

APPROVED AS TO FEATURES AFFECTING CITY OF SARATOGA FACILITIES — DATE

PREPARED UNDER THE SUPERVISION OF:

JIMMY W. SIMS — 04/08/10 DATE
REGISTERED CIVIL ENGINEER

REGISTERED PROFESSIONAL ENGINEER JIMMY W SIMS No. 35458 Exp. 09/30/11 CIVIL STATE OF CALIFORNIA

THE CONTRACTOR SHALL POSSESS THE CLASS (OR CLASSES) OF LICENSE AS SPECIFIED IN THE "NOTICE TO BIDDERS."

MARK THOMAS & COMPANY, INC.
Providing Engineering, Surveying, and Planning Services
1960 Zanker Road
San Jose, CA 95112
(408) 453-5373

DESIGNED BY :	P. TRINH
CHECKED BY :	M. FISHER
DATE :	03/31/10
SCALE :	NO SCALE
MTCo JOB No. :	SJ-09129

No.	DESCRIPTION	DATE	BY

REVISIONS

City of Saratoga
Public Works Department
13777 FRUITVALE AVENUE SARATOGA, CA 95070
(408) 868-1200 FAX (408) 868-1281

REGISTERED CIVIL ENGINEER — 04/08/10 DATE

ACCESSIBILITY UPGRADE - PHASE 1

TITLE AND LOCATION MAP

SHEET 1 OF 19 SHEETS

T-1

W:\Saratoga – SJ-09129-Citywide Accessible Signal Upg\CADD\PS&E\SJ-09129-T1.dwg 4/8/2010 2:42 PM

GENERAL NOTES:

1. ALL CURB RAMPS SHALL CONFORM TO THE ACCESSIBILITY REQUIREMENTS OF THE AMERICANS WITH DISABILITY ACT AND CALIFORNIA TITLE 24.
2. SEE CALTRANS Std PLANS RSP A88A AND A88B FOR ADDITIONAL CURB RAMP NOTES, DETAILS, AND ANY DIMENSIONS NOW SHOWN ON THESE PROJECT PLANS.
3. LOCATIONS OF EXISTING FACILITIES ARE APPROXIMATE. VERIFY LOCATION OF EXISTING FACILITIES PRIOR TO WORK.
4. SAWCUT ALL PAVEMENT CONFORMS.

ABBREVIATIONS:

ADA	AMERICANS WITH DISABILITIES ACT
BOW	BACK OF WALK
CR	CURB RAMP
GB	GRADE BREAK
Rem	REMOVE

LEGEND:

- HOT MIX ASPHALT CONCRETE
- PORTLAND CEMENT CONCRETE
- SYMBOL DENOTES RAMP LAYOUT CONTROL. VARIES FOR EACH RAMP
- DIRECTION OF FLOW. SLOPE SHALL BE 0.3% Min WHERE POSSIBLE. SLOPE SHALL BE CONTINUOUS WITHOUT GRADE BREAKS

PROJECT NOTES (ALL LAYOUT SHEETS):

1. ℄ OF RAMP AT FLOW LINE TO BE PLACED AT OFFSET SHOWN.
2. CONTRACTOR RESPONSIBLE FOR MARKING EXISTING ℄ OF RAMP PRIOR TO RAMP REMOVAL FOR GUIDANCE ON NEW RAMP PLACEMENT.
3. MATCH EXISTING SLOPE AND CONFORM. MAINTAIN EXISTING DRAINAGE PATTERN AS SHOWN.
4. CONFORM PAVING. 12" FULL DEPTH TYPE A HMAC. Min AC REMOVAL SHALL BE 12" WIDTH (Typ).
5. STRUCTURAL SECTION: 4" TYPE A HMAC, 6" CLASS 2 AB
6. STRUCTURAL SECTION: 4" PCC, 3" CLASS 2 AB

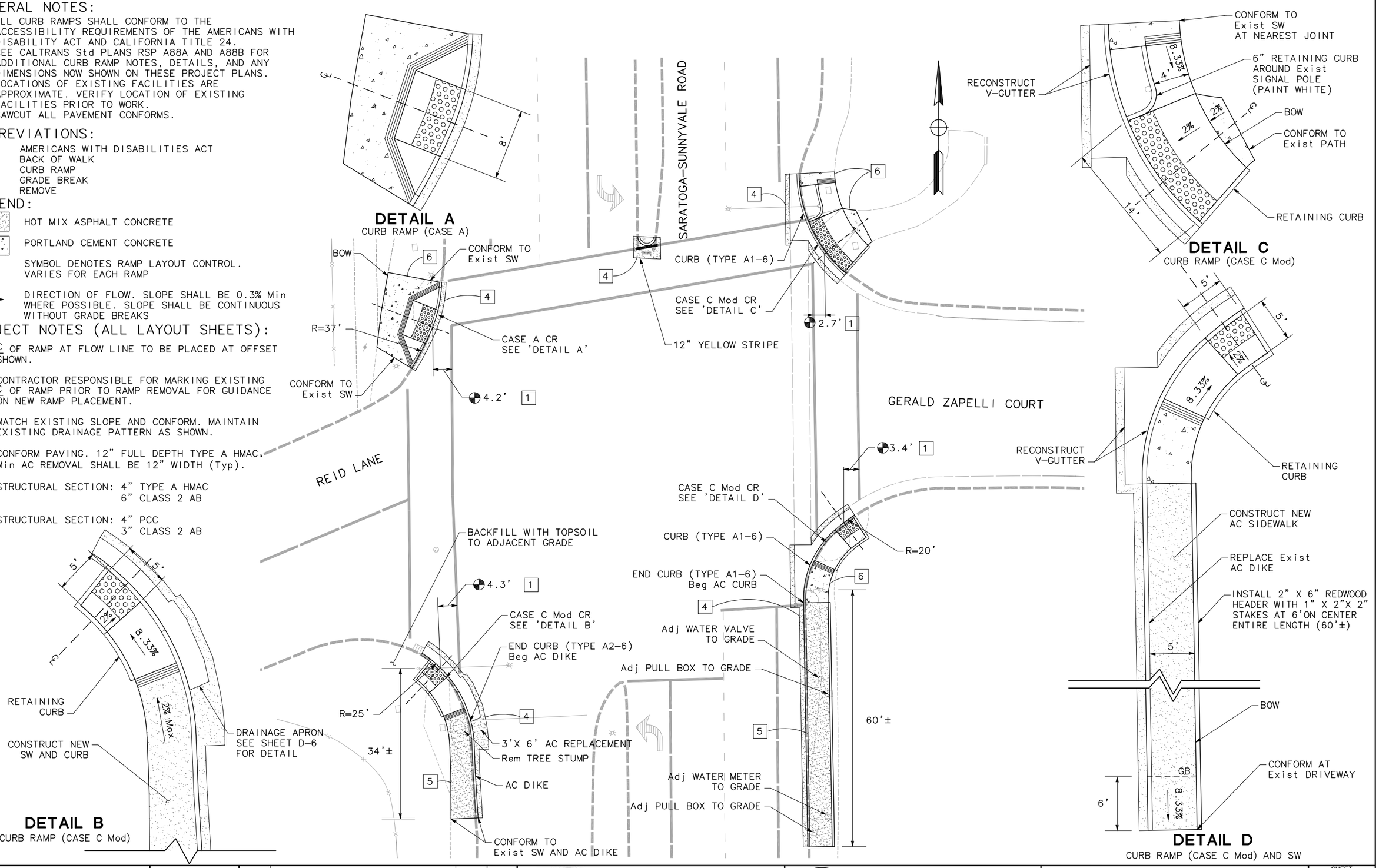

MARK THOMAS & COMPANY, INC. Providing Engineering, Surveying, and Planning Services, 1960 Zanker Road, San Jose, CA 95112, (408) 453-5373	DESIGNED BY: P. TRINH				
	CHECKED BY: M. FISHER				
	DATE: 03/31/10				
	SCALE: 1" = 10'	No.	DESCRIPTION	DATE	BY
	MTCo JOB No.: SJ-09129		REVISIONS		

City of Saratoga
Public Works Department
13777 FRUITVALE AVENUE SARATOGA, CA 95070
(408) 868-1200 FAX (408) 868-1281

REGISTERED CIVIL ENGINEER — 04/08/10 DATE

ACCESSIBILITY UPGRADE - PHASE 1
LOCATION 1:
SARATOGA SUNNYVALE RD - REID LN
LAYOUT

SHEET 2 OF 19 SHEETS
L-1

W:\Saratoga - SJ-09129-Citywide Accessible Signal Upg\CADD\PS&E\SJ-09129-L1-L6.dwg 4/8/2010 2:28 PM

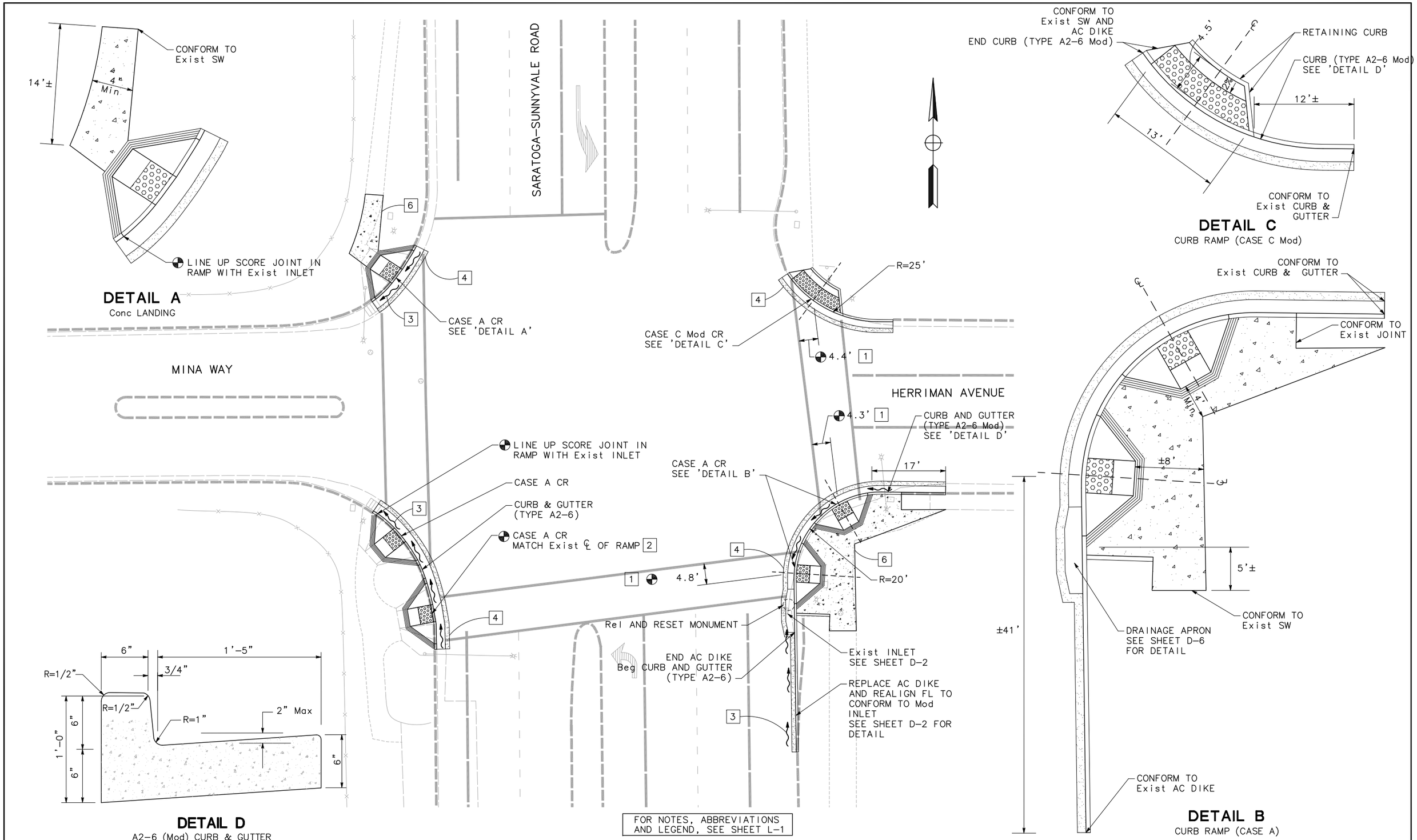

MARK THOMAS & COMPANY, INC.
Providing Engineering, Surveying, and Planning Services
1960 Zanker Road
San Jose, CA 95112
(408) 453-5373

DESIGNED BY :	P. TRINH
CHECKED BY :	M. FISHER
DATE :	03/31/10
SCALE :	1" = 10'
MTCo JOB No. :	SJ-09129

No.	DESCRIPTION	DATE	BY

REVISIONS

City of Saratoga
Public Works Department
13777 FRUITVALE AVENUE SARATOGA, CA 95070
(408) 868-1200 FAX (408) 868-1281

REGISTERED PROFESSIONAL ENGINEER JIMMY W STAGG No. 35458 Exp. 09/30/11 CIVIL STATE OF CALIFORNIA

REGISTERED CIVIL ENGINEER 04/08/10 DATE

ACCESSIBILITY UPGRADE - PHASE 1

LOCATION 2:
SARATOGA SUNNYVALE RD - HERRIMAN AVE

LAYOUT

SHEET 3 OF 19 SHEETS

L-2

W:\Saratoga - SJ-09129-Citywide Accessible Signal Upg\CADD\PS&E\SJ-09129-L1-L6.dwg 4/8/2010 2:29 PM

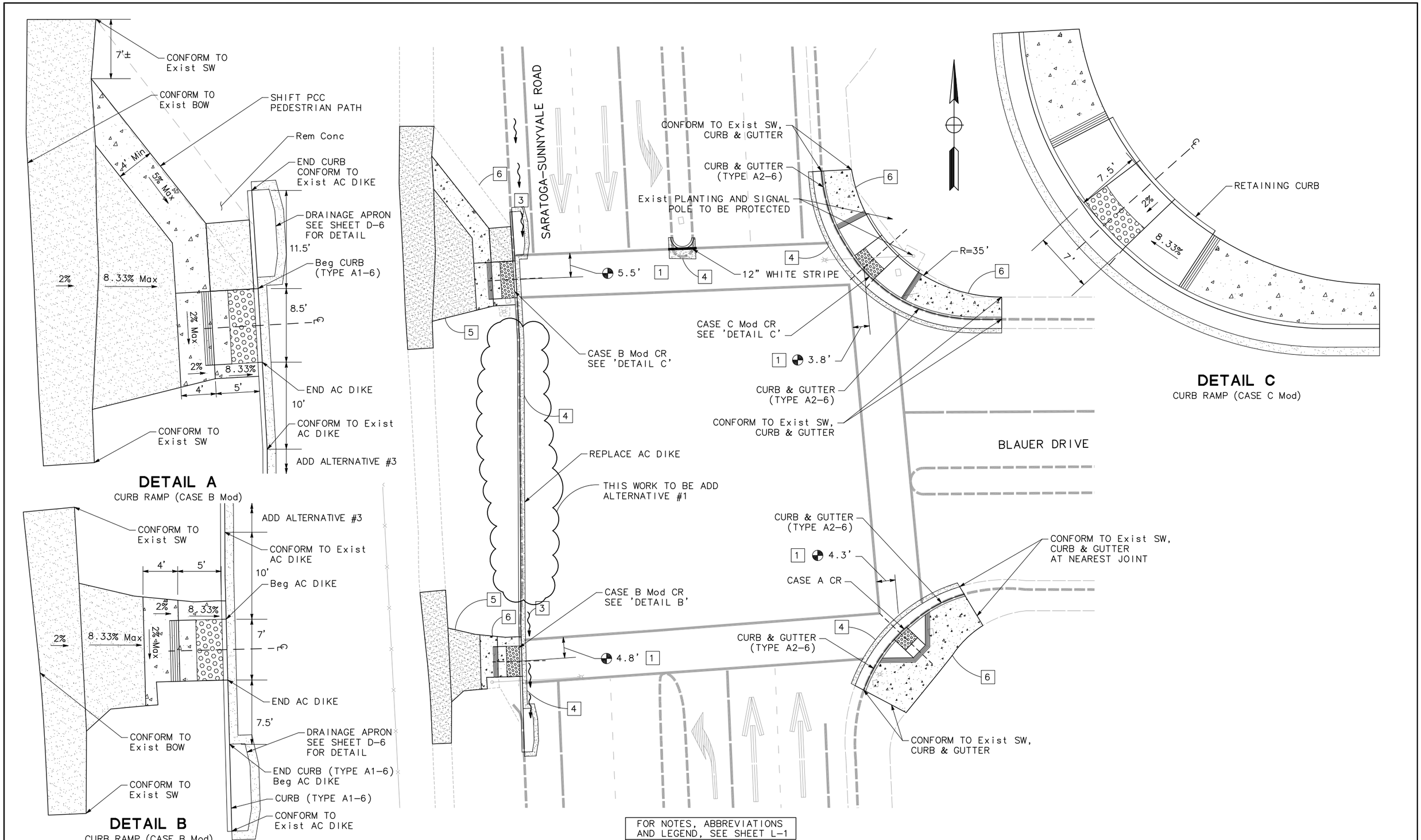

FOR NOTES, ABBREVIATIONS AND LEGEND, SEE SHEET L-1

MARK THOMAS & COMPANY, INC.
Providing Engineering, Surveying, and Planning Services
1960 Zanker Road
San Jose, CA 95112
(408) 453-5373

DESIGNED BY :	P. TRINH
CHECKED BY :	M. FISHER
DATE :	03/31/10
SCALE :	1" = 10'
MTCo JOB No. :	SJ-09129

No.	DESCRIPTION	DATE	BY
	REVISIONS		

City of Saratoga
Public Works Department
13777 FRUITVALE AVENUE SARATOGA, CA 95070
(408) 868-1200 FAX (408) 868-1281

REGISTERED CIVIL ENGINEER 04/08/10 DATE

ACCESSIBILITY UPGRADE - PHASE 1

LOCATION 3:
SARATOGA SUNNYVALE RD - BLAUER DR

LAYOUT

SHEET 4 OF 19 SHEETS

L-3

W:\Saratoga - SJ-09129-Citywide Accessible Signal Upg\CADD\PS&E\SJ-09129-L1-L6.dwg 4/8/2010 2:29 PM

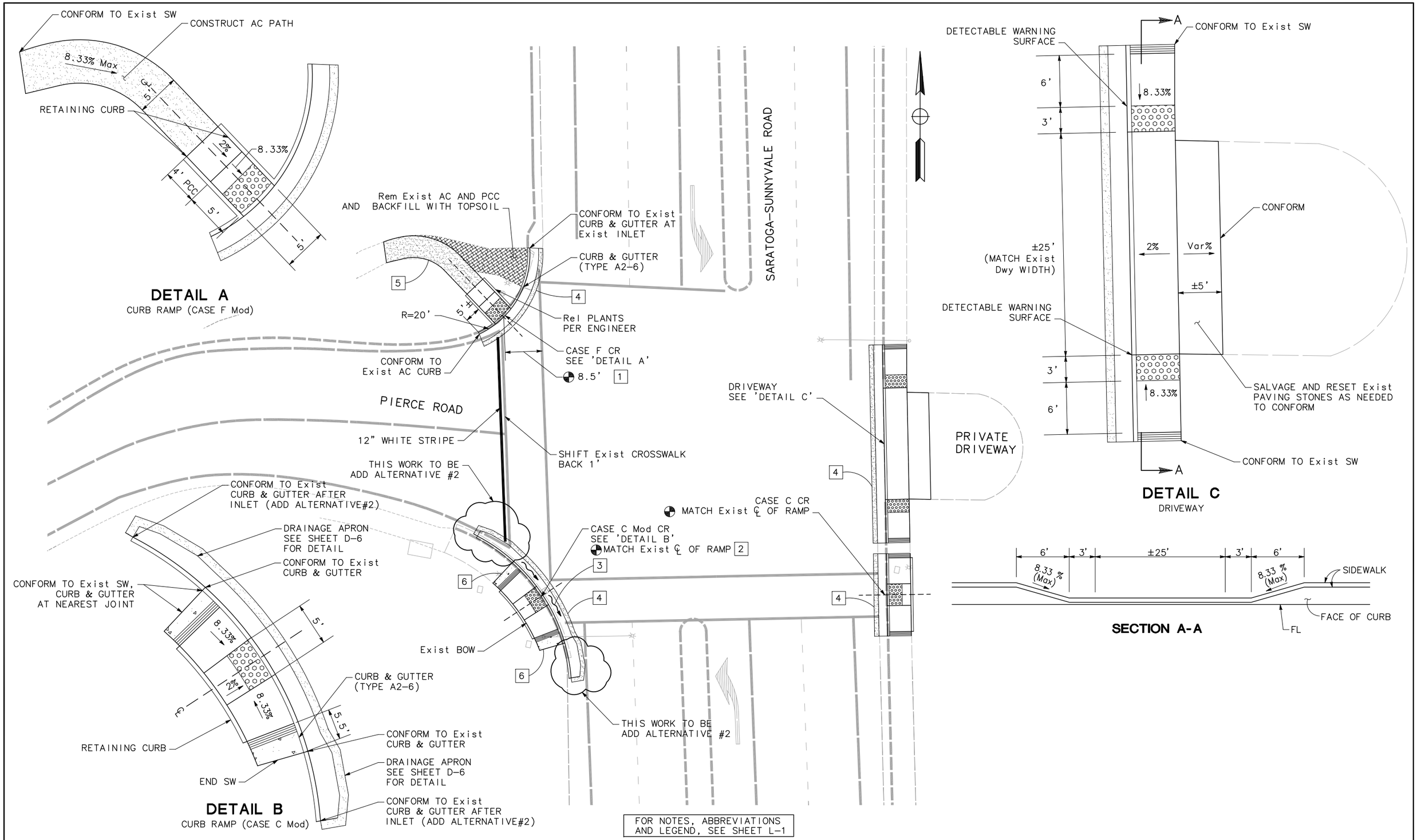

MARK THOMAS & COMPANY, INC.
Providing Engineering, Surveying, and Planning Services
1960 Zanker Road
San Jose, CA 95112
(408) 453-5373

DESIGNED BY :	P. TRINH
CHECKED BY :	M. FISHER
DATE :	03/31/10
SCALE :	1" = 10'
MTCo JOB No. :	SJ-09129

No.	DESCRIPTION	DATE	BY

REVISIONS

City of Saratoga
Public Works Department
13777 FRUITVALE AVENUE SARATOGA, CA 95070
(408) 868-1200 FAX (408) 868-1281

REGISTERED CIVIL ENGINEER 04/08/10 DATE

ACCESSIBILITY UPGRADE - PHASE 1

LOCATION 4:
SARATOGA SUNNYVALE RD - PIERCE RD

LAYOUT

SHEET 5 OF 19 SHEETS

L-4

W:\Saratoga - SJ-09129-Citywide Accessible Signal Upg\CADD\PS&E\SJ-09129-L1-L6.dwg 4/8/2010 2:30 PM

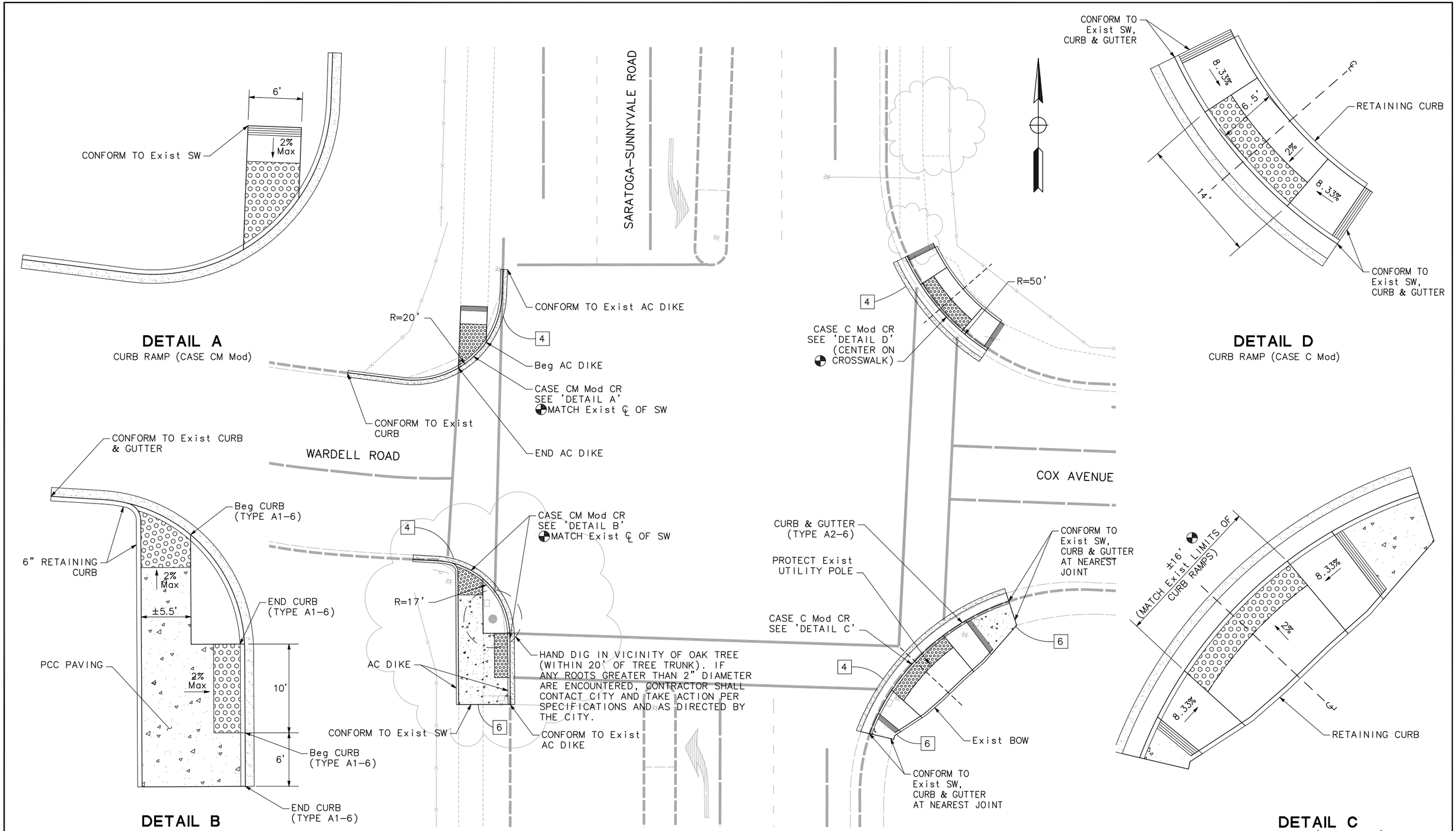

FOR NOTES, ABBREVIATIONS AND LEGEND, SEE SHEET L-1

MARK THOMAS & COMPANY, INC.
Providing Engineering, Surveying, and Planning Services
1960 Zanker Road
San Jose, CA 95112
(408) 453-5373

DESIGNED BY :	P. TRINH
CHECKED BY :	M. FISHER
DATE :	03/31/10
SCALE :	1" = 10'
MTCo JOB No. :	SJ-09129

No.	DESCRIPTION	DATE	BY
	REVISIONS		

City of Saratoga
Public Works Department
13777 FRUITVALE AVENUE SARATOGA, CA 95070
(408) 868-1200 FAX (408) 868-1281

REGISTERED PROFESSIONAL ENGINEER JIMMY W SIMS No. 35458 Exp. 09/30/11 CIVIL STATE OF CALIFORNIA

REGISTERED CIVIL ENGINEER

04/08/10
DATE

ACCESSIBILITY UPGRADE - PHASE 1

LOCATION 5:
SARATOGA SUNNYVALE RD - COX AVE

LAYOUT

SHEET 6 OF 19 SHEETS

L-5

W:\Saratoga - SJ-09129-Citywide Accessible Signal Upg\CADD\PS&E\SJ-09129-L1-L6.dwg 4/8/2010 2:30 PM

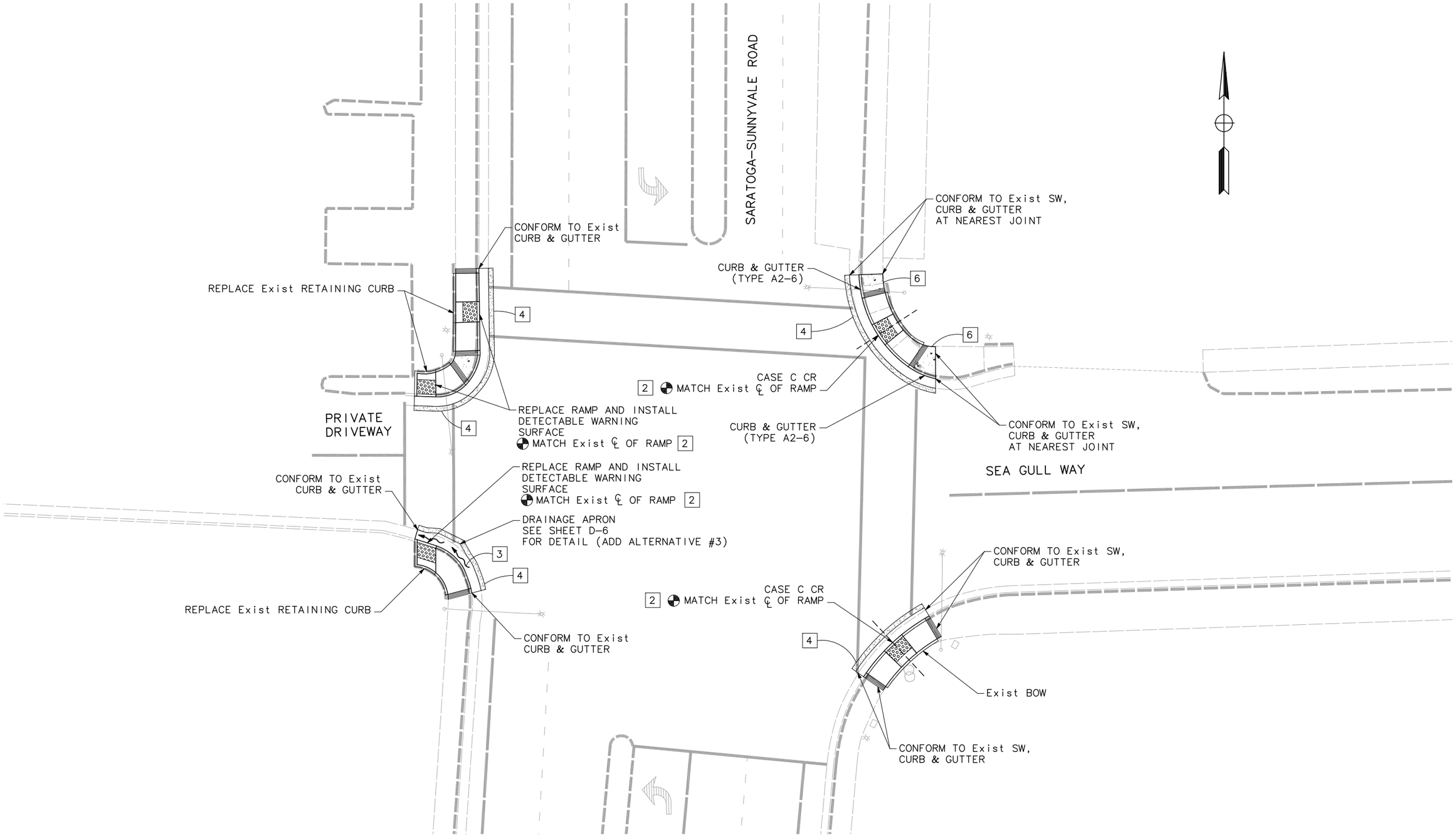

FOR NOTES, ABBREVIATIONS AND LEGEND, SEE SHEET L-1

MARK THOMAS & COMPANY, INC.
Providing Engineering, Surveying, and Planning Services
1960 Zanker Road
San Jose, CA 95112
(408) 453-5373

DESIGNED BY :	P. TRINH
CHECKED BY :	M. FISHER
DATE :	03/31/10
SCALE :	1" = 10'
MTCo JOB No. :	SJ-09129

No.	DESCRIPTION	DATE	BY

REVISIONS

City of Saratoga
Public Works Department
13777 FRUITVALE AVENUE SARATOGA, CA 95070
(408) 868-1200 FAX (408) 868-1281

REGISTERED PROFESSIONAL ENGINEER JIMMY W STARR No. 35458 Exp. 09/30/11 CIVIL STATE OF CALIFORNIA

REGISTERED CIVIL ENGINEER 04/08/10 DATE

ACCESSIBILITY UPGRADE - PHASE 1

LOCATION 6:
SARATOGA SUNNYVALE RD - SEAGULL WY

LAYOUT

SHEET 7 OF 19 SHEETS

L-6

W:\Saratoga — SJ-09129-Citywide Accessible Signal Upg\CADD\PS&E\SJ-09129-L1-L6.dwg 4/8/2010 2:30 PM

GENERAL NOTES:

1. LOCATIONS OF EXISTING DRAINAGE FACILITIES ARE APPROXIMATE. VERIFY LOCATION AND ELEVATION OF EXISTING DRAINAGE FACILITIES PRIOR TO WORK.
2. ALL PROPOSED INLETS SHALL INCLUDE DRAINAGE APRONS PER DETAIL ON SHEET D-6.
3. EXISTING INLETS: TG = ACTUAL ELEVATION AT INLET
   NEW INLETS: TG = FL EXTENSION PER DETAIL ON SHEET D-6 (DOES NOT INCLUDE 1" DEPRESSION).
4. EXISTING INLETS NOT CALLED OUT TO BE REMOVED OR ABANDONED SHALL BE CLEARED OF ALL DEBRIS PRIOR TO CONSTRUCTION.
5. ℄ OF RAMP AT FLOW LINE TO BE PLACED AT OFFSET SHOWN.

LEGEND:

- Exist DRAINAGE INLET
- DRAINAGE INLET
- Exist STORM DRAIN MANHOLE
- STORM DRAIN MANHOLE
- REMOVE PIPE

ABBREVIATIONS:

DA	DRAINAGE APRON
w/	WITH

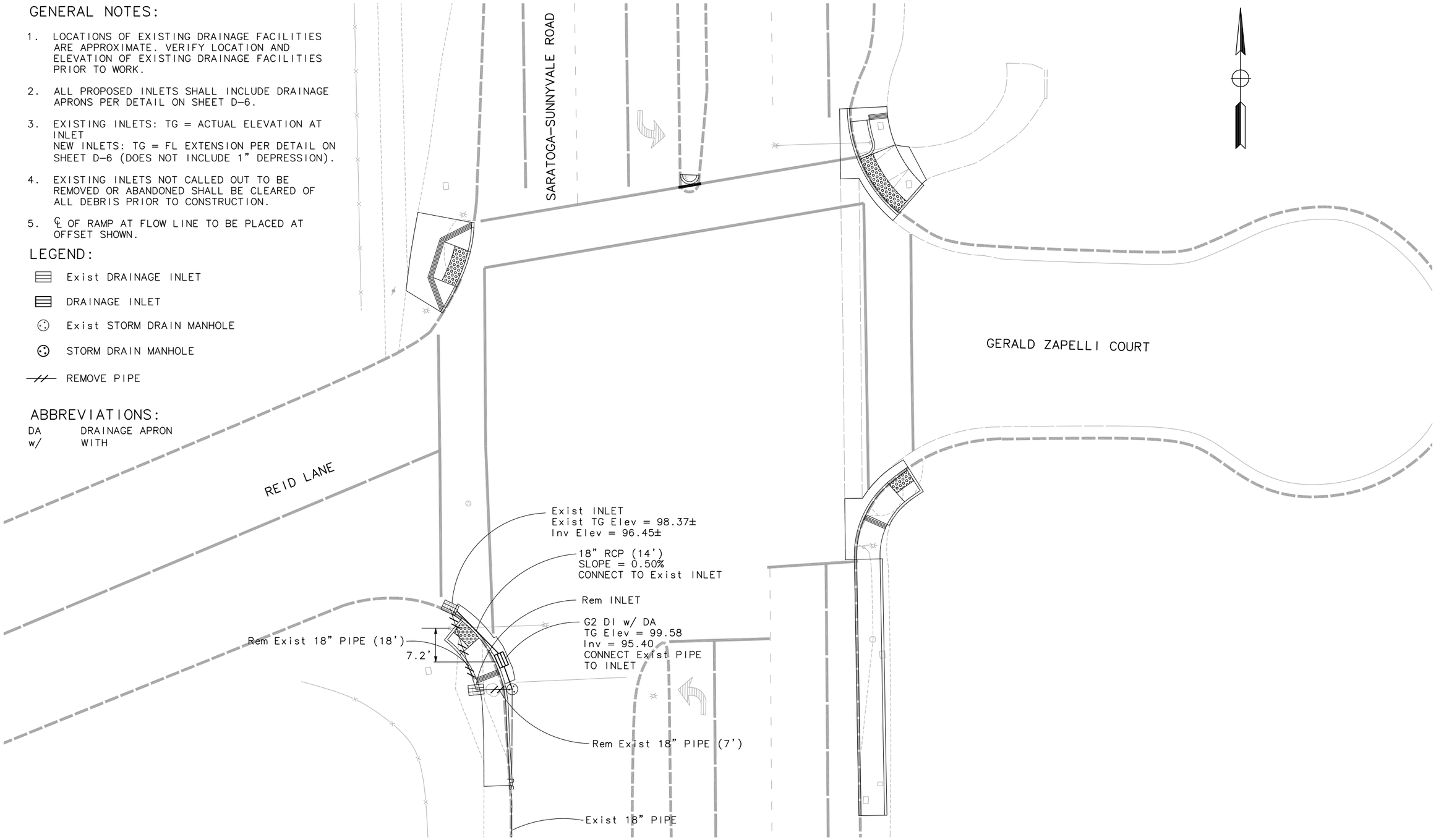

MARK THOMAS & COMPANY, INC.
Providing Engineering, Surveying, and Planning Services
1960 Zanker Road
San Jose, CA 95112
(408) 453-5373

DESIGNED BY :	P. TRINH
CHECKED BY :	M. FISHER
DATE :	03/31/10
SCALE :	1" = 10'
MTCo JOB No. :	SJ-09129

No.	DESCRIPTION	DATE	BY

REVISIONS

City of Saratoga
Public Works Department
13777 FRUITVALE AVENUE SARATOGA, CA 95070
(408) 868-1200 FAX (408) 868-1281

REGISTERED PROFESSIONAL ENGINEER JIMMY W. STAGG No. 35458 Exp. 09/30/11 CIVIL STATE OF CALIFORNIA

REGISTERED CIVIL ENGINEER 04/08/10 DATE

ACCESSIBILITY UPGRADE - PHASE 1

LOCATION 1:
SARATOGA SUNNYVALE RD - REID LN

DRAINAGE PLAN

SHEET 8 OF 19 SHEETS

D-1

W:\Saratoga - SJ-09129-Citywide Accessible Signal Upg\CADD\PS&E\SJ-09129-D1-D6.dwg 4/8/2010 2:39 PM

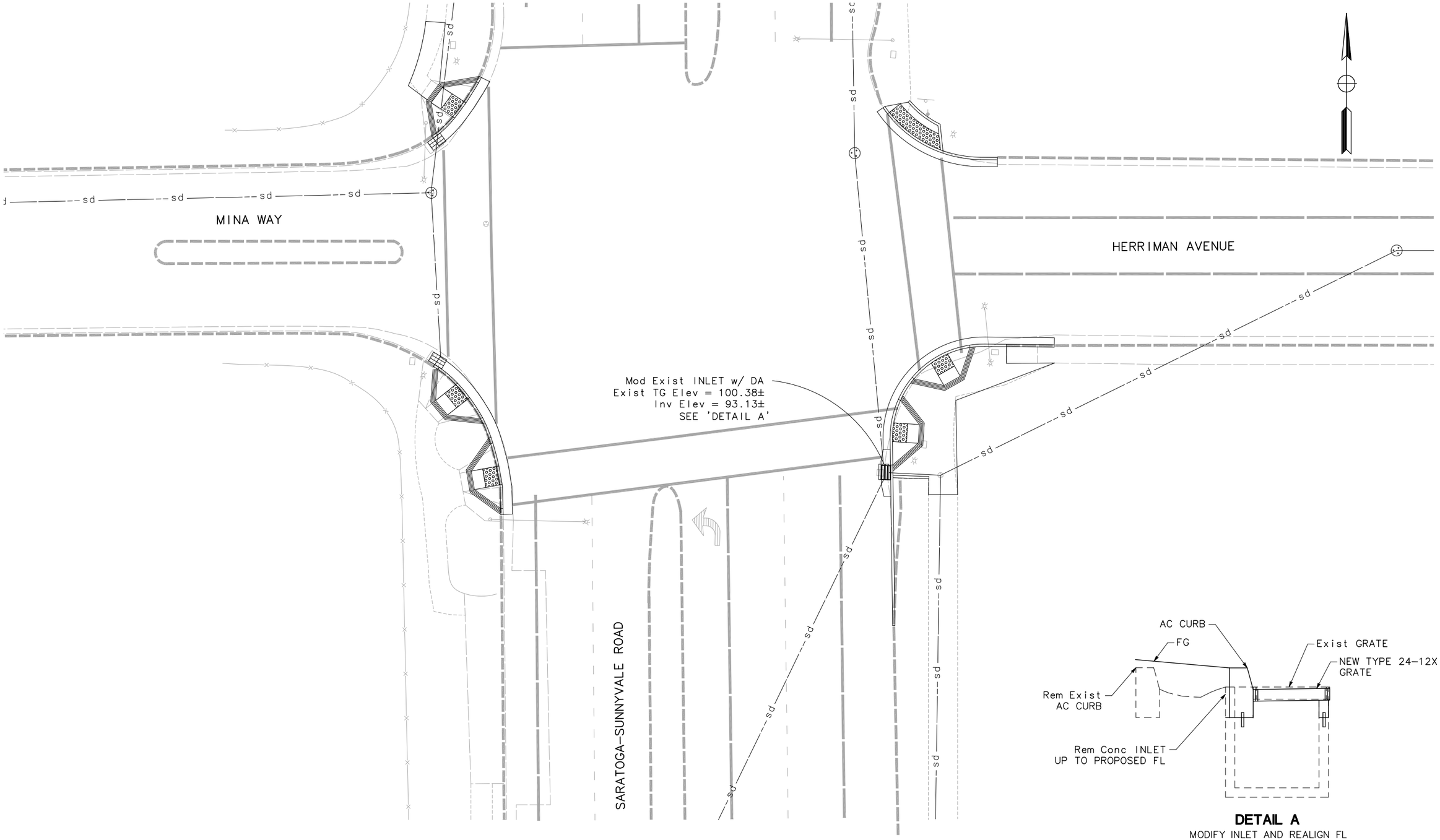

DETAIL A
MODIFY INLET AND REALIGN FL

FOR NOTES, ABBREVIATIONS AND LEGEND, SEE SHEET D-1

MARK THOMAS & COMPANY, INC.
Providing Engineering, Surveying, and Planning Services
1960 Zanker Road
San Jose, CA 95112
(408) 453-5373

DESIGNED BY :	P. TRINH
CHECKED BY :	M. FISHER
DATE :	03/31/10
SCALE :	1" = 10'
MTCo JOB No. :	SJ-09129

No.	DESCRIPTION	DATE	BY

REVISIONS

City of Saratoga
Public Works Department
13777 FRUITVALE AVENUE SARATOGA, CA 95070
(408) 868-1200 FAX (408) 868-1281

REGISTERED PROFESSIONAL ENGINEER JIMMY W STAGG No. 35458 Exp. 09/30/11 CIVIL STATE OF CALIFORNIA

REGISTERED CIVIL ENGINEER 04/08/10 DATE

ACCESSIBILITY UPGRADE - PHASE 1

LOCATION 2:
SARATOGA SUNNYVALE RD - HERRIMAN AVE

DRAINAGE PLAN

SHEET 9 OF 19 SHEETS

D-2

W:\Saratoga - SJ-09129-Citywide Accessible Signal Upg\CADD\PS&E\SJ-09129-D1-D6.dwg 4/8/2010 2:39 PM

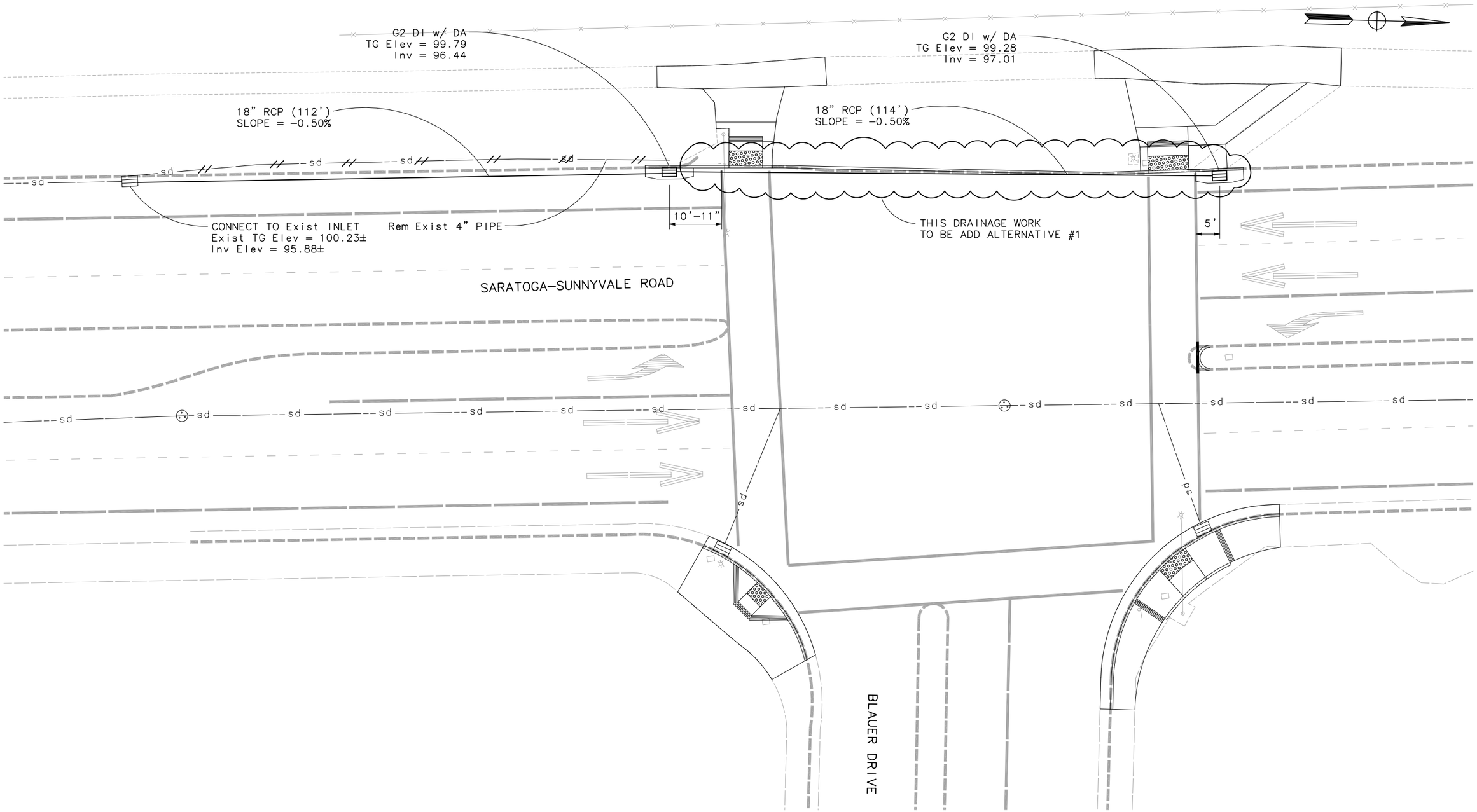

FOR NOTES, ABBREVIATIONS AND LEGEND, SEE SHEET D-1

MARK THOMAS & COMPANY, INC.
Providing Engineering, Surveying, and Planning Services
1960 Zanker Road
San Jose, CA 95112
(408) 453-5373

DESIGNED BY :	P. TRINH
CHECKED BY :	M. FISHER
DATE :	03/31/10
SCALE :	1" = 10'
MTCo JOB No. :	SJ-09129

No.	DESCRIPTION	DATE	BY

REVISIONS

City of Saratoga
Public Works Department
13777 FRUITVALE AVENUE SARATOGA, CA 95070
(408) 868-1200 FAX (408) 868-1281

REGISTERED PROFESSIONAL ENGINEER JIMMY W. STARKS No. 35458 Exp. 09/30/11 CIVIL STATE OF CALIFORNIA

REGISTERED CIVIL ENGINEER 04/08/10 DATE

ACCESSIBILITY UPGRADE - PHASE 1

LOCATION 3:
SARATOGA SUNNYVALE RD - BLAUER DR

DRAINAGE PLAN

SHEET 10 OF 19 SHEETS

D-3

W:\Saratoga - SJ-09129-Citywide Accessible Signal Upg\CADD\PS&E\SJ-09129-D1-D6.dwg 4/8/2010 2:39 PM

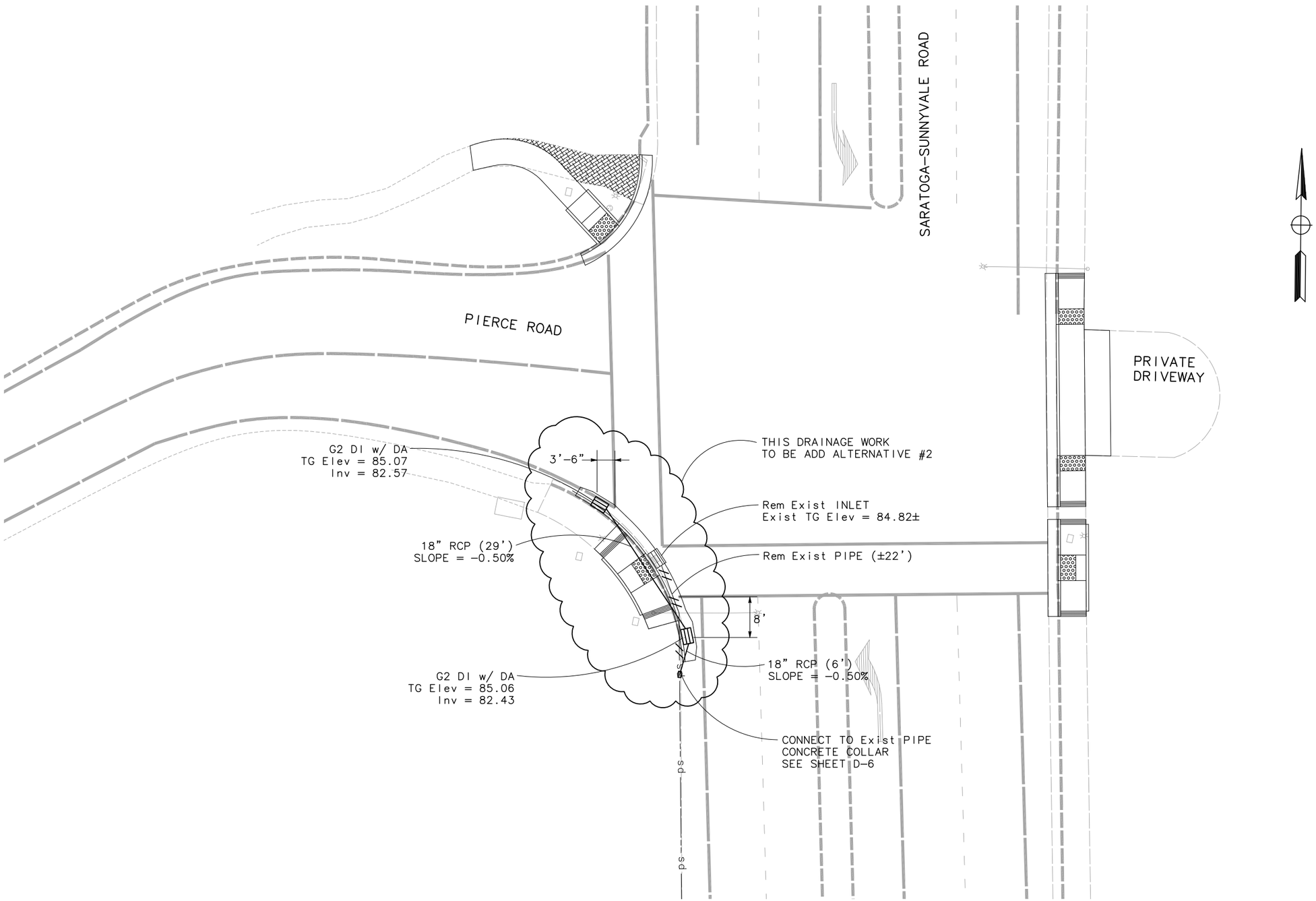

FOR NOTES, ABBREVIATIONS AND LEGEND, SEE SHEET D-1

MARK THOMAS & COMPANY, INC.
Providing Engineering, Surveying, and Planning Services
1960 Zanker Road
San Jose, CA 95112
(408) 453-5373

DESIGNED BY :	P. TRINH
CHECKED BY :	M. FISHER
DATE :	03/31/10
SCALE :	1" = 10'
MTCo JOB No. :	SJ-09129

No.	DESCRIPTION	DATE	BY

REVISIONS

City of Saratoga
Public Works Department
13777 FRUITVALE AVENUE SARATOGA, CA 95070
(408) 868-1200 FAX (408) 868-1281

REGISTERED PROFESSIONAL ENGINEER JIMMY W STARR No. 35458 Exp. 09/30/11 CIVIL STATE OF CALIFORNIA

REGISTERED CIVIL ENGINEER 04/08/10 DATE

ACCESSIBILITY UPGRADE - PHASE 1

LOCATION 4:
SARATOGA SUNNYVALE RD - PIERCE RD

DRAINAGE PLAN

SHEET 11 OF 19 SHEETS

D-4

W:\Saratoga — SJ-09129-Citywide Accessible Signal Upg\CADD\PS&E\SJ-09129-D1-D6.dwg 4/8/2010 2:40 PM

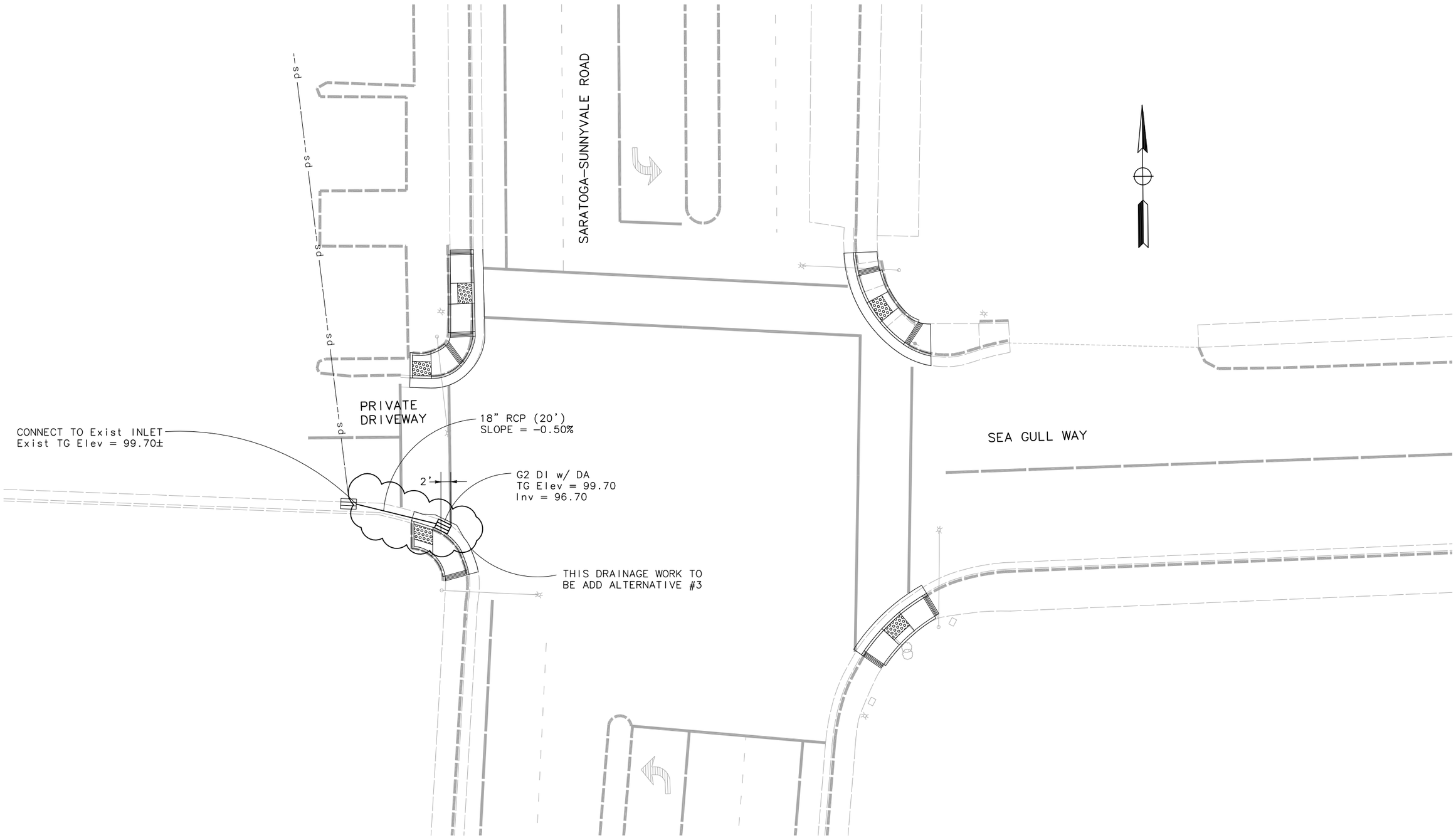

FOR NOTES, ABBREVIATIONS AND LEGEND, SEE SHEET D-1

MARK THOMAS & COMPANY, INC.
Providing Engineering, Surveying, and Planning Services
1960 Zanker Road
San Jose, CA 95112
(408) 453-5373

DESIGNED BY :	P. TRINH
CHECKED BY :	M. FISHER
DATE :	03/31/10
SCALE :	1" = 10'
MTCo JOB No. :	SJ-09129

No.	DESCRIPTION	DATE	BY
	REVISIONS		

City of Saratoga
Public Works Department
13777 FRUITVALE AVENUE SARATOGA, CA 95070
(408) 868-1200 FAX (408) 868-1281

REGISTERED PROFESSIONAL ENGINEER JIMMY W SIMS No. 35458 Exp. 09/30/11 CIVIL STATE OF CALIFORNIA

REGISTERED CIVIL ENGINEER

04/08/10
DATE

ACCESSIBILITY UPGRADE - PHASE 1

LOCATION 6:
SARATOGA SUNNYVALE RD - SEA GULL WAY

DRAINAGE PLAN

SHEET 12 OF 19 SHEETS

D-5

W:\Saratoga - SJ-09129-Citywide Accessible Signal Upg\CADD\PS&E\SJ-09129-D1-D6.dwg 4/8/2010 2:40 PM

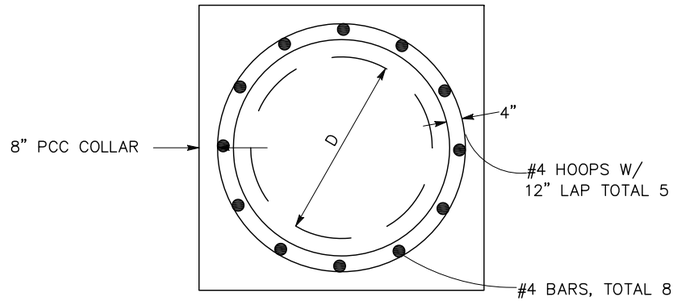

SECTION A-A

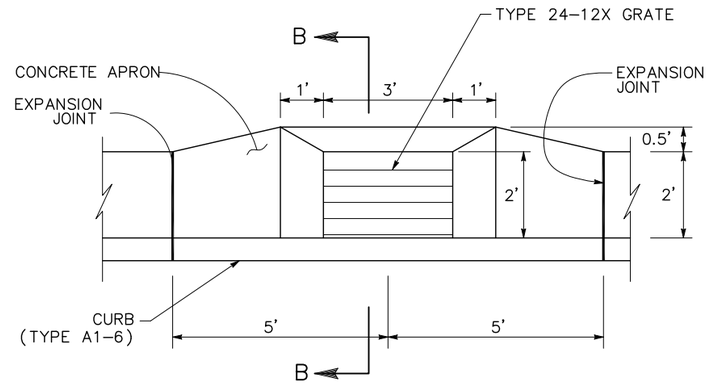

DRAINAGE APRON

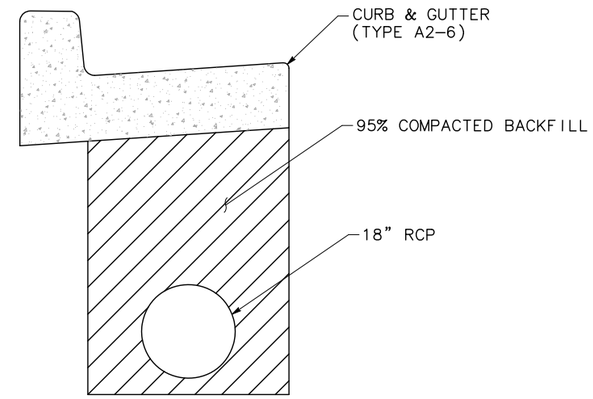

PIPE UNDER GUTTER

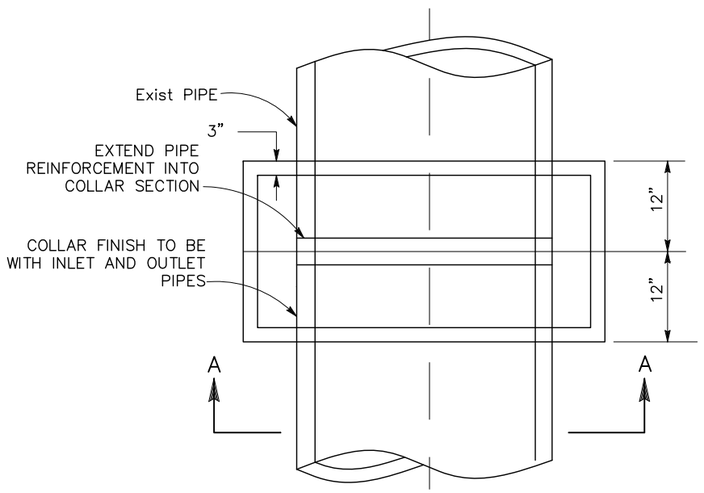

CONCRETE COLLAR

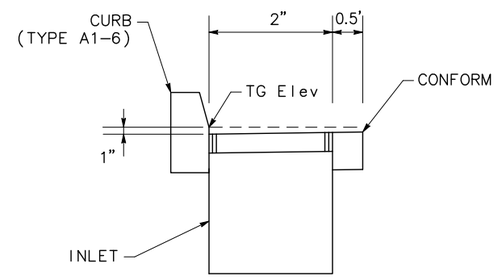

SECTION B-B
1" DEPRESSION

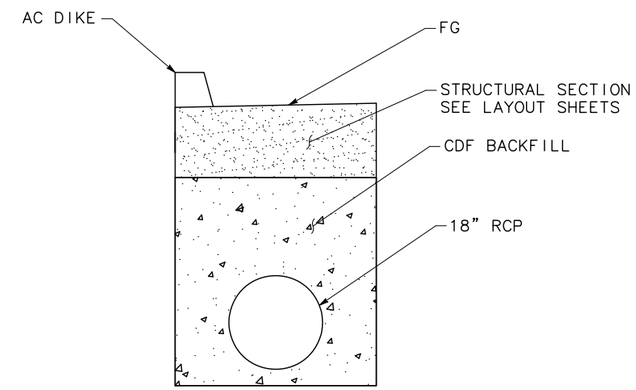

PIPE UNDER ASPHALT
(LESS THAN 2' OF PIPE COVER)

TRENCH DETAIL

FOR NOTES, ABBREVIATIONS
AND LEGEND, SEE SHEET D-1

MARK THOMAS & COMPANY, INC.
Providing Engineering, Surveying, and Planning Services
1960 Zanker Road
San Jose, CA 95112
(408) 453-5373

DESIGNED BY :	P. TRINH
CHECKED BY :	M. FISHER
DATE :	03/31/10
SCALE :	1" = 10'
MTCo JOB No. :	SJ-09129

No.	DESCRIPTION	DATE	BY

REVISIONS

City of Saratoga
Public Works Department
13777 FRUITVALE AVENUE SARATOGA, CA 95070
(408) 868-1200 FAX (408) 868-1281

REGISTERED PROFESSIONAL ENGINEER JIMMY W STAGG No. 35458 Exp 09/30/11 CIVIL STATE OF CALIFORNIA

REGISTERED CIVIL ENGINEER 04/08/10 DATE

ACCESSIBILITY UPGRADE - PHASE 1

DRAINAGE DETAILS

SHEET 13 OF 19 SHEETS

D-6

W:\Saratoga - SJ-09129-Citywide Accessible Signal Upg\CADD\PS&E\SJ-09129-D1-D6.dwg 4/8/2010 2:40 PM

PROJECT NOTES (ALL SHEETS):

1. REMOVE EXISTING PEDESTRIAN PUSH BUTTON POLE.
2. REMOVE EXISTING PEDESTRIAN PUSH BUTTON.
3. RELOCATE EXISTING PEDESTRIAN PUSH BUTTON POLE.
4. REPLACE EXISTING PEDESTRIAN PUSH BUTTION(S) WITH 'POLARA NAVIGATOR 2' VIBROTACTILE PEDESTRIAN PUSH BUTTON(S).
5. INSTALL NEW PEDESTRIAN PUSH BUTTON POLE WITH 'POLARA NAVIGATOR 2' VIBROTACTILE PEDESTRIAN PUSH BUTTON(S)
6. REPLACE EXISTING PEDESTRIAN SIGNAL FACE WITH COUNTDOWN PEDESTRIAN SIGNAL FACE.
7. ADJUST PULL BOX TO FINISHED GRADE.

GENERAL NOTES:

1. EXISTING EQUIPMENT SHALL REMAIN IN PLACE UNLESS OTHERWISE NOTED.
2. EQUIPMENT SHOWN ON THE PLANS ARE APPROXIMATE AND MAY BE CHANGED TO SUIT FIELD CONDITIONS OR AS DIRECTED BY THE ENGINEER.
3. CONTRACTOR SHALL CALL 1-800-642-2444, UNDERGROUND SERVICE ALERT (U.S.A.), AT LEAST 48 HOURS PRIOR TO EXCAVATION.
4. TRAFFIC SIGNALS SHALL CONFORM TO THE STATE OF CALIFORNIA STANDARD SPECIFICATIONS (2006), AND THE STATE OF CALIFORNIA STANDARD PLANS (2006).
5. PEDESTRIAN PUSH BUTTONS SHALL MEET ADA REQUIREMENTS.
6. ALL EQUIPMENT REMOVED SHALL BECOME PROPERTY OF THE CONTRACTOR.
7. FOR ELECTRICAL SYMBOLS AND ABBREVIATIONS, SEE CALTRANS STANDARD PLANS RSP ES-1A AND RSP ES-1B.
8. All PUSH BUTTONS SHALL BE BETWEEN 42" MINIMUM AND 48" MAXIMUM ABOVE FINISHED GRADE.
9. CONTRACTOR IS RESPONSIBLE FOR ALL WORK ASSOCIATED WITH THE SIGNAL MODIFICATIONS SHOWN ON THE PLANS INCLUDING PROVIDING MATERIALS AND LABOR FOR INSTALLING CONDUITS, CONDUCTORS, WIRING, SPLICING, POLE FOUNDATIONS COMPLETE IN PLACE INCLUDING ANY ADJUSTMENTS OR MODIFICATIONS REQUIRED BY THE CITY AND ANY WARRANTY REPLACEMENTS.

ABBREVIATIONS:

ADA AMERICANS WITH DISABILITIES ACT
CR CURB RAMP

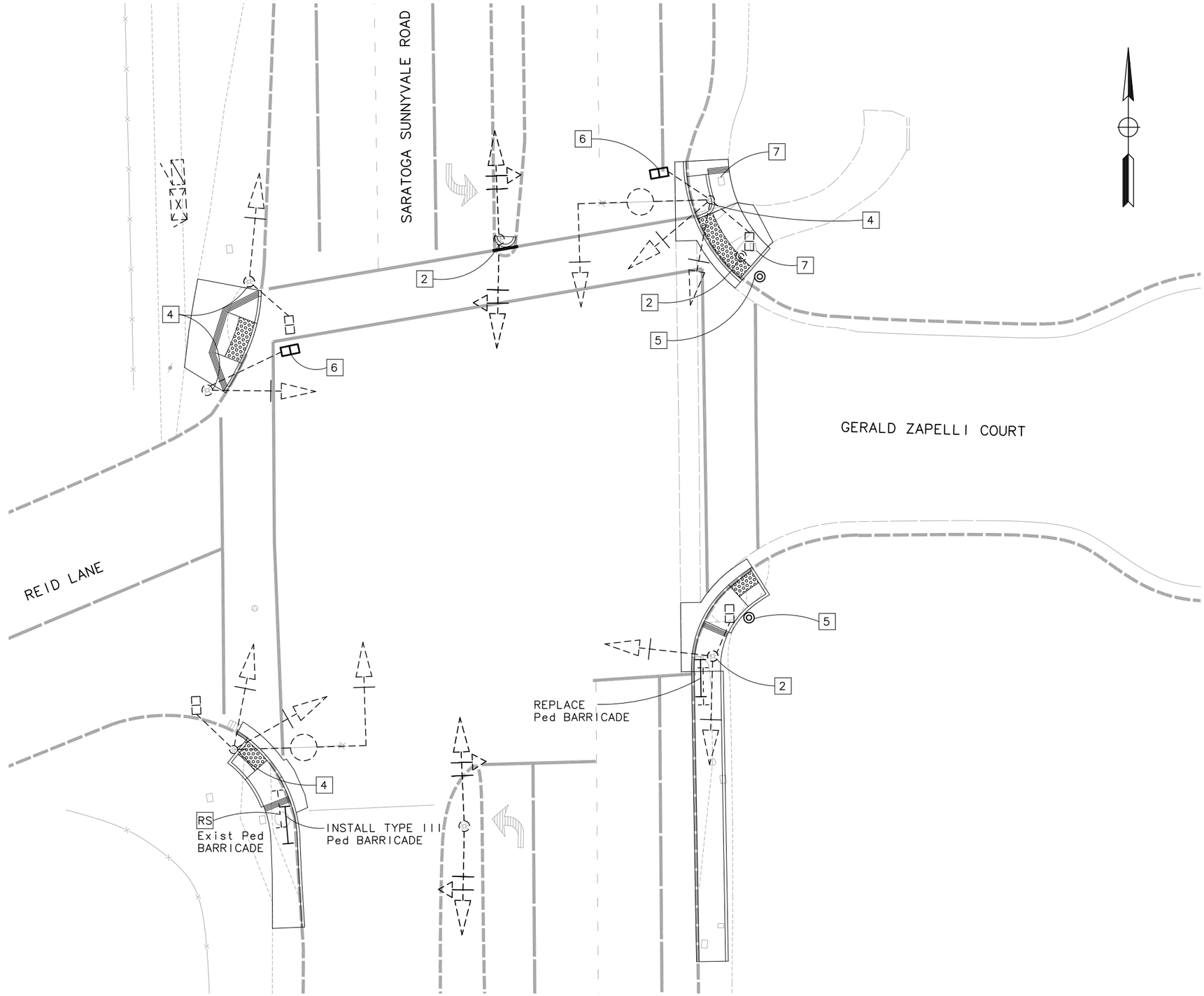

MARK THOMAS & COMPANY, INC. Providing Engineering, Surveying, and Planning Services 1960 Zanker Road San Jose, CA 95112 (408) 453-5373	DESIGNED BY : P. TRINH				
	CHECKED BY : M. FISHER				
	DATE : 03/31/10				
	SCALE : 1" = 10'	No.	DESCRIPTION	DATE	BY
	MTCo JOB No. : SJ-09129	REVISIONS			

City of Saratoga
Public Works Department
13777 FRUITVALE AVENUE SARATOGA, CA 95070
(408) 868-1200 FAX (408) 868-1281

REGISTERED PROFESSIONAL ENGINEER JIMMY W. STAKS No. 35458 Exp. 09/30/11 CIVIL STATE OF CALIFORNIA
REGISTERED CIVIL ENGINEER 04/08/10 DATE

ACCESSIBILITY UPGRADE - PHASE 1
LOCATION 1:
SARATOGA SUNNYVALE RD - REID LN
SIGNAL

SHEET 14 OF 19 SHEETS
E-1

W:\Saratoga - SJ-09129-Citywide Accessible Signal Upg\CADD\PS&E\SJ-09129-E1-E6.dwg 4/8/2010 2:35 PM

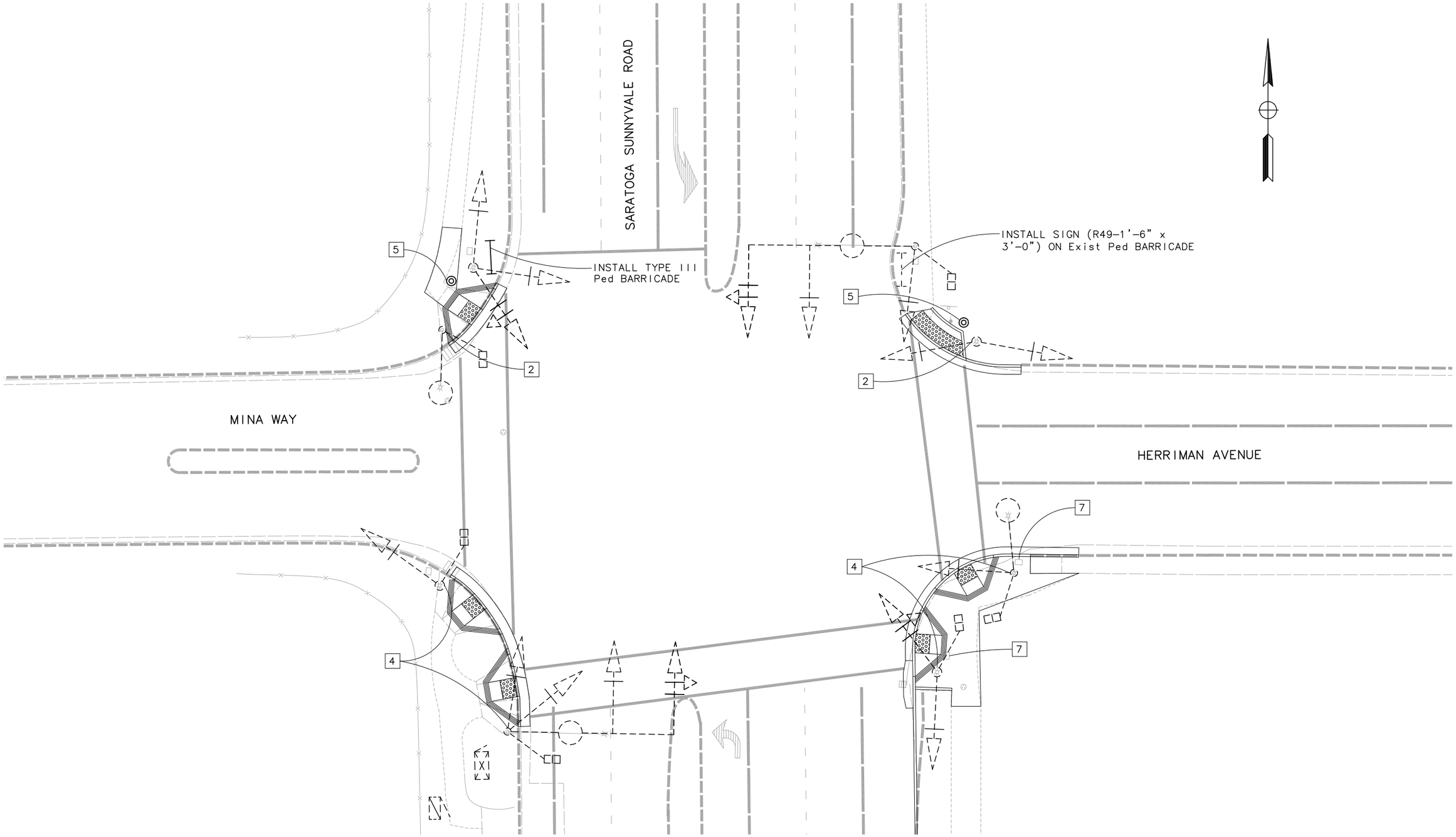

FOR NOTES, ABBREVIATIONS
AND LEGEND, SEE SHEET E-1

MARK THOMAS & COMPANY, INC.
Providing Engineering, Surveying, and Planning Services
1960 Zanker Road
San Jose, CA 95112
(408) 453-5373

DESIGNED BY :	P. TRINH
CHECKED BY :	M. FISHER
DATE :	03/31/10
SCALE :	1" = 10'
MTCo JOB No. :	SJ-09129

No.	DESCRIPTION	DATE	BY
	REVISIONS		

City of Saratoga
Public Works Department
13777 FRUITVALE AVENUE SARATOGA, CA 95070
(408) 868-1200 FAX (408) 868-1281

REGISTERED PROFESSIONAL ENGINEER
JIMMY W SIMS
No. 35458
Exp. 09/30/11
CIVIL
STATE OF CALIFORNIA

REGISTERED CIVIL ENGINEER

04/08/10
DATE

ACCESSIBILITY UPGRADE - PHASE 1

LOCATION 2:
SARATOGA SUNNYVALE RD - HERRIMAN AVE

SIGNAL

SHEET 15 OF 19 SHEETS

E-2

W:\Saratoga - SJ-09129-Citywide Accessible Signal Upg\CADD\PS&E\SJ-09129-E1-E6.dwg 4/8/2010 2:35 PM

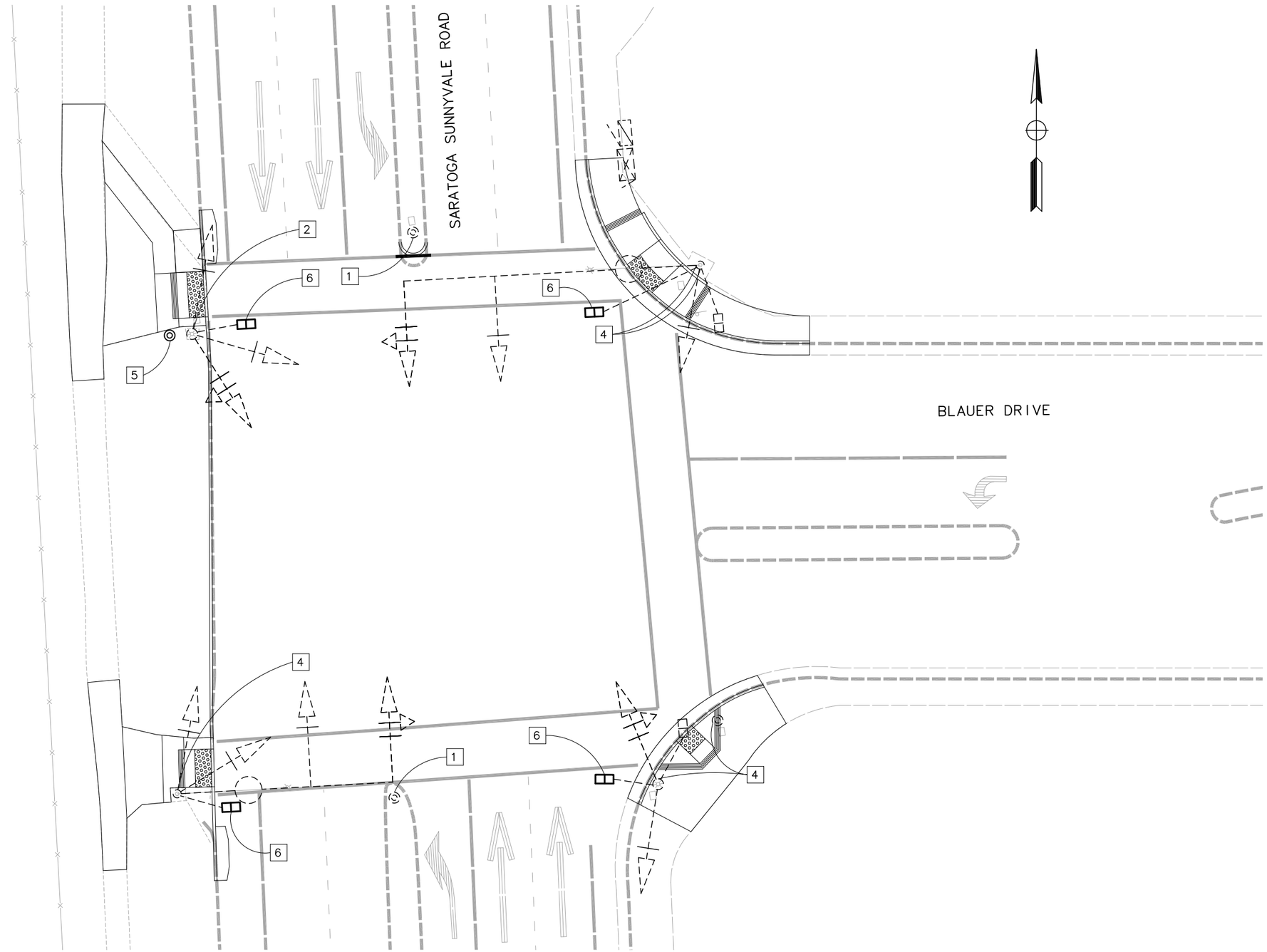

FOR NOTES, ABBREVIATIONS AND LEGEND, SEE SHEET E-1

MARK THOMAS & COMPANY, INC.
Providing Engineering, Surveying, and Planning Services
1960 Zanker Road
San Jose, CA 95112
(408) 453-5373

DESIGNED BY :	P. TRINH
CHECKED BY :	M. FISHER
DATE :	03/31/10
SCALE :	1" = 10'
MTCo JOB No. :	SJ-09129

No.	DESCRIPTION	DATE	BY

REVISIONS

City of Saratoga
Public Works Department
13777 FRUITVALE AVENUE SARATOGA, CA 95070
(408) 868-1200 FAX (408) 868-1281

REGISTERED PROFESSIONAL ENGINEER JIMMY W STAGG No. 35458 Exp. 09/30/11 CIVIL STATE OF CALIFORNIA

REGISTERED CIVIL ENGINEER 04/08/10 DATE

ACCESSIBILITY UPGRADE - PHASE 1

LOCATION 3:
SARATOGA SUNNYVALE RD - BLAUER DR

SIGNAL

SHEET 16 OF 19 SHEETS

E-3

W:\Saratoga — SJ-09129-Citywide Accessible Signal Upg\CADD\PS&E\SJ-09129-E1-E6.dwg 4/8/2010 2:36 PM

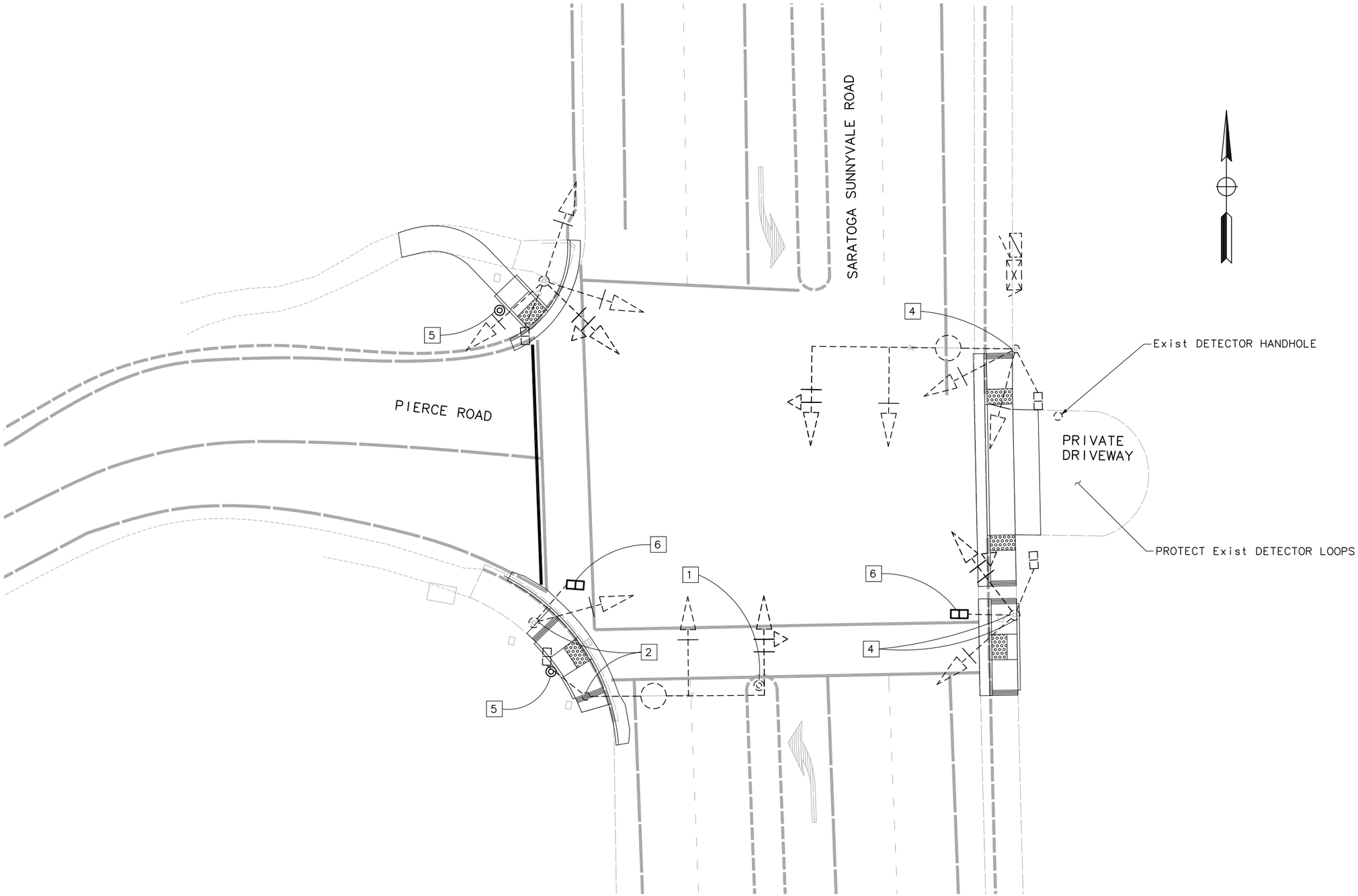

FOR NOTES, ABBREVIATIONS AND LEGEND, SEE SHEET E-1

MARK THOMAS & COMPANY, INC.
Providing Engineering, Surveying, and Planning Services
1960 Zanker Road
San Jose, CA 95112
(408) 453-5373

DESIGNED BY :	P. TRINH
CHECKED BY :	M. FISHER
DATE :	03/31/10
SCALE :	1" = 10'
MTCo JOB No. :	SJ-09129

No.	DESCRIPTION	DATE	BY

REVISIONS

City of Saratoga
Public Works Department
13777 FRUITVALE AVENUE SARATOGA, CA 95070
(408) 868-1200 FAX (408) 868-1281

REGISTERED PROFESSIONAL ENGINEER JIMMY W SIMS No. 35458 Exp. 09/30/11 CIVIL STATE OF CALIFORNIA

REGISTERED CIVIL ENGINEER 04/08/10 DATE

ACCESSIBILITY UPGRADE - PHASE 1

LOCATION 4:
SARATOGA SUNNYVALE RD - PIERCE RD

SIGNAL

SHEET 17 OF 19 SHEETS

E-4

W:\Saratoga - SJ-09129-Citywide Accessible Signal Upg\CADD\PS&E\SJ-09129-E1-E6.dwg 4/8/2010 2:36 PM

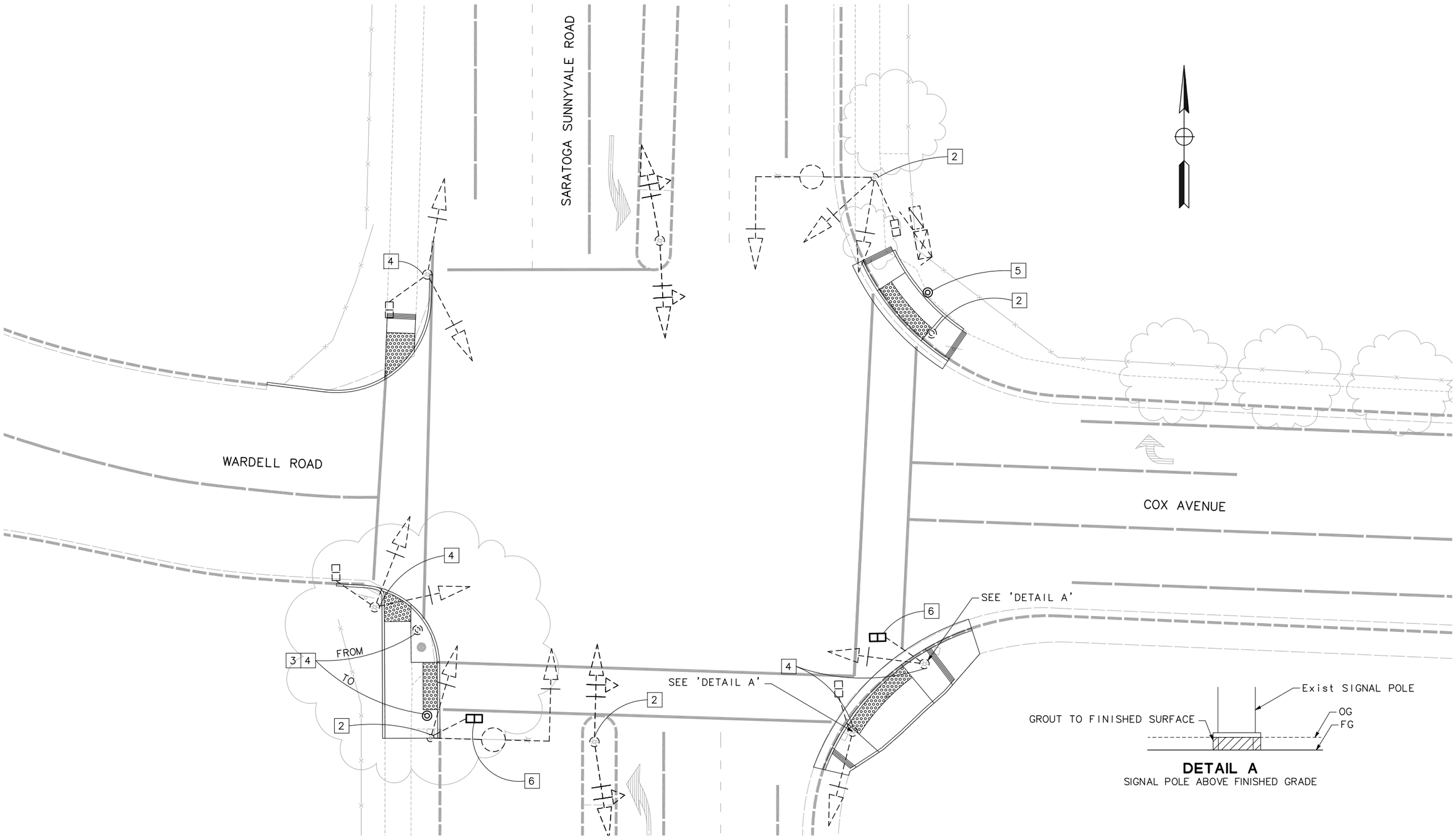

FOR NOTES, ABBREVIATIONS AND LEGEND, SEE SHEET E-1

MARK THOMAS & COMPANY, INC.
Providing Engineering, Surveying, and Planning Services
1960 Zanker Road
San Jose, CA 95112
(408) 453-5373

DESIGNED BY :	P. TRINH
CHECKED BY :	M. FISHER
DATE :	03/31/10
SCALE :	1" = 10'
MTCo JOB No. :	SJ-09129

No.	DESCRIPTION	DATE	BY

REVISIONS

City of Saratoga
Public Works Department
13777 FRUITVALE AVENUE SARATOGA, CA 95070
(408) 868-1200 FAX (408) 868-1281

REGISTERED PROFESSIONAL ENGINEER JIMMY W STAG No. 35458 Exp. 09/30/11 CIVIL STATE OF CALIFORNIA

REGISTERED CIVIL ENGINEER 04/08/10 DATE

ACCESSIBILITY UPGRADE - PHASE 1

LOCATION 5:
SARATOGA SUNNYVALE RD - COX AVE

SIGNAL

SHEET 18 OF 19 SHEETS

E-5

W:\Saratoga — SJ-09129-Citywide Accessible Signal Upg\CADD\PS&E\SJ-09129-E1-E6.dwg 4/8/2010 2:36 PM

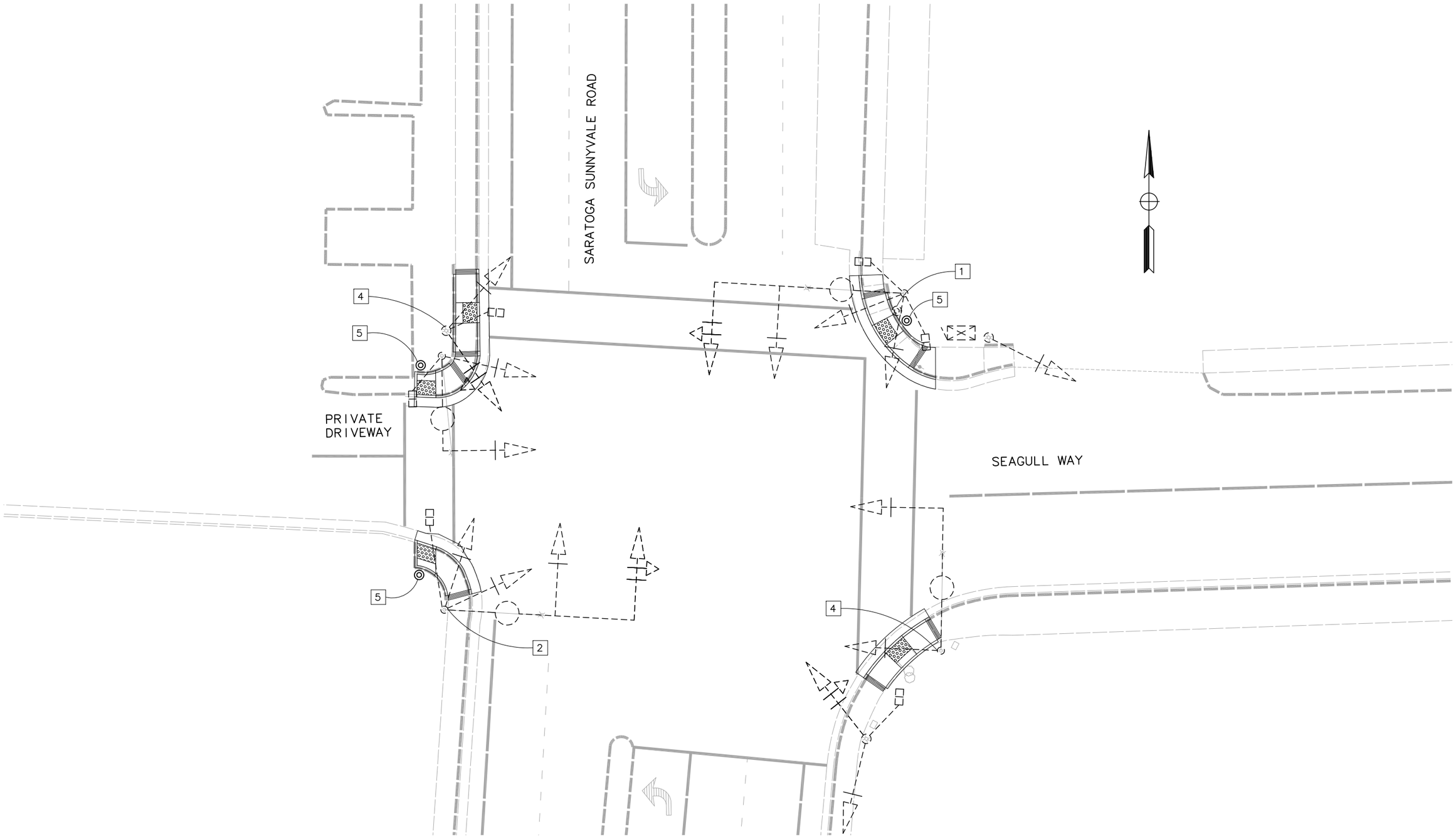

FOR NOTES, ABBREVIATIONS AND LEGEND, SEE SHEET E-1

MARK THOMAS & COMPANY, INC.
Providing Engineering, Surveying, and Planning Services
1960 Zanker Road
San Jose, CA 95112
(408) 453-5373

DESIGNED BY :	P. TRINH
CHECKED BY :	M. FISHER
DATE :	03/31/10
SCALE :	1" = 10'
MTCo JOB No. :	SJ-09129

No.	DESCRIPTION	DATE	BY

REVISIONS

City of Saratoga
Public Works Department
13777 FRUITVALE AVENUE SARATOGA, CA 95070
(408) 868-1200 FAX (408) 868-1281

REGISTERED PROFESSIONAL ENGINEER JIMMY W. STAGS No. 35458 Exp. 09/30/11 CIVIL STATE OF CALIFORNIA

REGISTERED CIVIL ENGINEER 04/08/10 DATE

ACCESSIBILITY UPGRADE - PHASE 1

LOCATION 6:
SARATOGA SUNNYVALE RD - SEAGULL WY

SIGNAL

SHEET 19 OF 19 SHEETS

E-6

W:\Saratoga - SJ-09129-Citywide Accessible Signal Upg\CADD\PS&E\SJ-09129-E1-E6.dwg 4/8/2010 2:36 PM