ABBREVIATIONS

&	AND	L	ANGLE
@	AT	L.	LENGTH
℄	CENTERLINE	LAT.	LATERAL
ø	DIAMETER OR ROUND	LB.	POUND
#	POUND	LF	LINEAR FEET
(E)	EXISTING	LLH	LONG LEG HORIZONTAL
ℙ	PLATE	LLV	LONG LEG VERTICAL
A.B.	ANCHOR BOLT	MAX.	MAXIMUM
ABV	ABOVE	M.B.	MACHINE BOLT
APPROX.	APPROXIMATE	MECH.	MECHANICAL
ARCH.	ARCHITECTURAL	MFR.	MANUFACTURER
ASTM	AMERICAN SOCIETY OF TESTING MATERIALS	MIN.	MINIMUM
		MISC.	MISCELLANEOUS
AVG.	AVERAGE	MLB	MICRO LAM BEAM (TRUSS JOIST)
BLW	BELOW	NO.	NUMBER
BLKG.	BLOCKING	N.S.	NEAR SIDE
BM.	BEAM	O/	OVER
BOT.	BOTTOM	O.C.	ON CENTER
C.I.P.	CAST IN PLACE	PL.	PLATE
CL	CENTER LINE	P.S.F.	POUNDS PER SQUARE FOOT
CLR.	CLEAR	P.S.I.	POUND PER SQUARE INCH
COL.	COLUMN	PT.	POINT
CONC.	CONCRETE	REF.	REFERENCE
CONN.	CONNECTION	REINF.	REINFORCEMENT
CONT.	CONTINUOUS	REQ'D.	REQUIRED
C.P.	COMPLETE PENETRATION	RF	ROOF
CTR.	CENTER	S.A.D.	SEE ARCHITECTURAL DETAILS
DET.	DETAIL	SECT.	SECTION
D.F.	DOUGLAS FIR	SIM.	SIMILAR
DIA.	DIAMETER	SPEC.	SPECIFICATION
DIM.	DIMENSION	SQ.	SQUARE
DWG.	DRAWING	STAG.	STAGGERED
EA.	EACH	STD.	STANDARD
EL.	ELEVATION	STIFF.	STIFFENER
EMBED.	EMBEDMENT	STL.	STEEL
E.N.	EDGE NAIL	STRL.	STRUCTURAL
E.O.	EDGE OF	SYM.	SYMMETRICAL
E.S.	EACH SIDE	T&B	TOP AND BOTTOM
EQ.	EQUAL	T&G	TONGUE AND GROOVE
ETC.	ET CETERA	THK.	THICK
EXT.	EXTERIOR	T.O.	TOP OF
E.W.	EACH WAY	T.O.C.	TOP OF CONCRETE
F.F.	FINISHED FLOOR	T.O.S.	TOP OF STEEL
F.O.	FACE OF	TS	TUBE STEEL
F.O.C.	FACE OF CONCRETE	TYP.	TYPICAL
F.S.	FAR SIDE	U.O.N.	UNLESS OTHERWISE NOTED
FT.	FOOT, FEET	VERT.	VERTICAL
GA.	GAGE	W/	WITH
GALV.	GALVANIZED	WF	WIDE FLANGE BEAM
>	GREATER THAN	W/O	WITHOUT
≥	GREATER THAN OR EQUAL TO	W.P.	WORK POINT
<	LESS THAN	W.P.J.	WEAKENED PLANE JOINT
≤	LESS THAN OR EQUAL TO	WT	WIDE FLANGE TEE
H.D.	HOLD DOWN	WT.	WEIGHT
HORIZ.	HORIZONTAL	W.W.F.	WELDED WIRE FABRIC
H.S.B.	HIGH STRENGTH BOLT		
HSS	HOLLOW STRUCTURAL STEEL		
HT.	HEIGHT		
JST.	JOIST		
JT.	JOINT		

GENERAL NOTES

GENERAL

1.1 CONSIDER GENERAL NOTES AS APPLYING TO ALL DRAWINGS.

1.2 DO ALL WORK IN ACCORDANCE WITH ALL STATE AND LOCAL BUILDING CODES IN EFFECT AT THE PLACE OF THE BUILDING. DESIGN WAS PERFORMED IN ACCORDANCE WITH THE 2010 CALIFORNIA BUILDING CODE.

1.3 THE ENGINEER SHALL HAVE NO CONTROL OR CHARGE OF, NOR BE RESPONSIBLE FOR THE CONSTRUCTION MEANS, METHODS, TECHNIQUES, SEQUENCES, OR PROCEDURES, SAFETY PRECAUTIONS, AND PROGRAMS IN CONNECTION WITH THE WORK, THE ACTS OR OMISSIONS OF THE CONTRACTOR, SUBCONTRACTOR, OR ANY PERSONS PERFORMING ANY OF THE WORK OR FOR THE FAILURE OF ANY OF THEM TO CARRY OUT THE WORK IN CONFORMANCE WITH THE CONTRACT DOCUMENTS.

1.4 USE THE FOLLOWING DESIGN LOADS/PARAMETERS:

LIVE LOAD	BUILDING PARAMETERS					SITE PARAMETERS			SEISMIC COEFFICIENTS					WIND PARAMETERS	
ROOF (PSF)	OCC.	I	R	Ω_0	C_d	SITE CLASS	S_S	S_1	SDC	S_{DS}	S_{D1}	C_S		MPH	EXP
20	II	1.00	1.25	1.25	1.25	D	1.50	0.535	D	1.00	0.54	0.8		85	C

1.5 CONSTRUCT THOSE FEATURES OF THE PROJECT, WHICH MAY NOT BE FULLY SHOWN, IN A MANNER SIMILAR TO THAT USED FOR SIMILAR FEATURES.

1.6 CONTRACTOR IS TO VERIFY ALL DIMENSIONS PRIOR TO BEGINNING OF CONSTRUCTION. ANY DISCREPANCIES MUST BE REPORTED TO THE ENGINEER BEFORE PROCEEDING WITH WORK. COORDINATE STRUCTURAL DIMENSIONS WITH ARCHITECTURAL AND ALL OTHER DRAWINGS AND SPECIFICATIONS.

1.7 PROVIDE SPECIAL INSPECTION AS REQUIRED BY SECTION 1704 OF THE 2010 CALIFORNIA BUILDING CODE FOR THE FOLLOWING ITEMS:

1.7.1 PLACEMENT OF REINFORCING STEEL.
1.7.2 TAKING OF TEST SPECIMENS AND PLACING OF ALL CONCRETE.
1.7.3 BOLTS IN CONCRETE.
1.7.4 STRUCTURAL WELDING.

1.8 ALL WORK SHALL BE DONE SO AS TO MINIMIZE DAMAGE TO EXISTING ASPHALT PAVING.

1.9 (E) DENOTES EXISTING CONSTRUCTION.

1.10 THE STRUCTURAL SYSTEMS HAVE BEEN DESIGNED TO CARRY THE SUPERIMPOSED LIVE LOADS AS PRESCRIBED BY THE BUILDING CODE AND IN ACCORDANCE WITH STANDARD ENGINEERING PRACTICES, WITH NO SPECIAL PROVISIONS FOR CARRYING CONCENTRATED LOADS FROM STORAGE AND HANDLING OF CONSTRUCTION MATERIALS OR FROM OPERATION OF CONSTRUCTION EQUIPMENT. THE CONTRACTOR SHALL PROVIDE ALL SCAFFOLDING, BRACING, AND SHORING SYSTEMS AS REQUIRED FOR INSTALLATION, STABILITY, AND SAFETY OF NEW WORK AND PROVIDE PROTECTION AS REQUIRED FOR THE SAFETY OF PEDESTRIANS AND JOBSITE PERSONNEL. AT ALL TIMES, THE CONTRACTOR SHALL BE SOLELY AND COMPLETELY RESPONSIBLE FOR THE CONDITIONS OF THE JOBSITE INCLUDING SAFETY OF PERSONS AND PROPERTY. THE CONTRACTOR SHALL PROTECT NEW AND EXISTING CONSTRUCTION AND MATERIALS FROM ADVERSE CONDITIONS AND DAMAGE.

1.11 SHOULD ANY CONDITION ARISE WHERE THE INTENT OF THE DRAWINGS IS IN DOUBT OR WHERE THERE APPEARS TO BE AN ERROR ON THE DRAWINGS OR DISCREPANCY BETWEEN THE DRAWINGS AND FIELD CONDITION, THE ENGINEER SHALL BE NOTIFIED AS SOON AS POSSIBLE FOR A PROCEDURE TO BE FOLLOWED. IF THE CONTRACTOR PROCEEDS WITH THE WORK AFFECTED WITHOUT INSTRUCTIONS FROM THE ENGINEER, THE CONTRACTOR SHALL MAKE GOOD ANY RESULTING DAMAGE OR DEFECTS. THIS INCLUDES TYPOGRAPHICAL ERRORS IN THE SPECIFICATIONS AND ERRORS ON THE DRAWINGS.

1.12 THE ENGINEER HAS NOT BEEN RETAINED FOR SUPERVISION OR INSPECTIONS, BUT WILL RESOLVE IN WRITING ITEMS BROUGHT TO HIS ATTENTION. THE ENGINEER SHALL NOT BE RESPONSIBLE FOR VERBAL INSTRUCTIONS.

1.13 SHOP DRAWING SUBMITTALS SHALL BE STAMPED BY THE PROJECT ENGINEER OF RECORD AS HAVING BEEN REVIEWED/APPROVED PRIOR TO SUBMITTAL TO THE CITY AND DISTRIBUTION TO THE JOB SITE. SUBMITTAL SHALL INCLUDE 3 SETS OF PRINTS. SUBMIT SHOP DRAWINGS FOR EACH OF THE FOLLOWING:

1.13.1 CONCRETE MIX DESIGN.
1.13.2 CONCRETE REINFORCING.
1.13.3 STRUCTURAL STEEL AND MISCELLANEOUS IRON.

FOUNDATIONS

2.1 DO EXCAVATIONS AS NEARLY AS POSSIBLE TO NEAT LINES REQUIRED BY SIZE AND SHAPE OF FOOTINGS WHICH ARE CAST IN EARTH TRENCHES WITHOUT FORMING, UNLESS OTHERWISE SHOWN. BACKFILL OVER EXCAVATIONS WITH CONCRETE OR REPORT TO THE SOILS ENGINEER AND BACKFILL AS HE DIRECTS (ALSO SEE SOILS REPORT).

2.2 FOUNDATION DESIGN PARAMETERS:

2.2.1 450 LBS/CU. FT. LATERAL PASSIVE RESISTANCE
2.2.2 500 LBS/SQ. FT. FOR ALLOWABLE ADHESION

2.3 A SOILS REPORT FOR THIS PROJECT HAS BEEN PREPARED BY COTTON, SHIRES ASSOCIATES, INC. 330 VILLAGE LANE, LOS GATOS, CA. (408) 354-5542 SEE SOILS REPORT NO. E0328 & E0328A DATED 12/19/08 & 05/19/11 FOR SPECIFIC DESIGN CRITERIA.

2.4 SEE SOILS ENGINEER'S REPORT PRIOR TO ANY SITE WORK, GRADING, SHORING, COMPACTION, LIME TREATMENT, OR EXCAVATION OF FOUNDATIONS. FOLLOW SOILS REPORT RECOMMENDATIONS AND PROCEDURES.

2.5 THE SOILS ENGINEER SHALL SUBMIT A LETTER TO THE BUILDING OFFICIAL CONFIRMING THAT THE FOUNDATION PLAN, GRADING PLAN, AND SPECIFICATIONS HAVE BEEN REVIEWED AND THAT IT HAS BEEN DETERMINED THAT THE RECOMMENDATIONS IN THE SOILS REPORT ARE PROPERLY INCORPORATED INTO THE PLANS.

2.6 THE SOILS ENGINEER SHALL BE RETAINED TO PROVIDE OBSERVATION AND TESTING SERVICES DURING THE GRADING, PAVING, AND FOUNDATION PHASE OF CONSTRUCTION PER THE SOILS REPORT RECOMMENDATIONS. SUBMIT INSPECTION AND TESTING REPORTS TO THE BUILDING DEPARTMENT.

2.7 FOUNDATIONS AND GRADE BEAMS SHALL BE POURED DIRECTLY AGAINST UNDISTURBED SOIL OR THE VOIDS CREATED FROM FORMING SHALL BE BACKFILLED WITH MATERIAL COMPACTED TO AT LEAST 90 PERCENT RELATIVE COMPACTION.

CONCRETE

3.1 CEMENT: ASTM C150 TYPE II. CEMENT SHALL BE OF SAME BRAND, TYPE AND SOURCE THROUGHOUT PROJECT. WHERE AGGREGATES ARE POTENTIALLY REACTIVE, USE LOW ALKALI CEMENT.

3.2 AGGREGATES SHALL CONFORM TO ASTM C33.

3.3 CONCRETE MIXES SHALL BE DESIGNED BY A TESTING LABORATORY APPROVED BY THE ENGINEER. MIXES SHALL CONFORM TO APPLICABLE BUILDING CODE REQUIREMENTS, REGARDLESS OF OTHER MINIMUM REQUIREMENTS SPECIFIED HEREIN OR ON THE DRAWINGS. MIX DESIGNS SHALL BE SUBMITTED TO THE ENGINEER FOR APPROVAL BEFORE USE. DESIGNS SHALL SHOW PROPORTIONS OF CEMENT, FINE AND COARSE AGGREGATES AND WATER, AND GRADATION OF COMBINED AGGREGATES.

3.4 PROVIDE MIX DESIGNS THAT WILL MEET THE MINIMUM REQUIREMENTS LISTED BELOW. INCREASE CEMENT CONTENT OVER THAT SHOWN, IF REQUIRED TO OBTAIN THE COMPRESSIVE STRENGTH:

CONCRETE MIX DESIGN SCHEDULE				
LOCATION	28-DAY COMPRESSIVE STRENGTH (PSI)	MIN. CEMENT CONTENT (SACKS)	RANGE SLUMP (IN.)	MAX. AGGREGATE SIZE (IN.)
COLUMN PIER	3000	5 1/4	3"-4"	1"

3.5 MAKE LAPS CONTACT SPLICES, DEVELOPMENT LENGTHS, HOOK EMBEDMENTS PER ACI 318-05, UNLESS OTHERWISE NOTED. STAGGER LAP SPLICES WHERE POSSIBLE.

STRUCTURAL STEEL

4.1 STRUCTURAL STEEL AND MISCELLANEOUS IRON SHALL CONFORM TO AISC SPECIFICATIONS AND CODE OF STANDARD PRACTICES. USE AWS SPECIFICATIONS FOR WELDING.

4.2 STRUCTURAL STEEL SHALL BE AS FOLLOWS:

STEEL MATERIAL SCHEDULE:	
ITEM	SPECIFICATION
ANGLES	ASTM A36
HSS TUBE STEEL	ASTM A500 GRADE B
MISCELLANEOUS PLATES	ASTM A36
MACHINE BOLTS (M.B.)	ASTM A307
NUTS	ASTM A563
ANCHOR BOLTS TYP. (U.O.N)	ASTM A354 BD
WELDING ELECTRODES	E70XX

4.3 E70-T4 OR NS-3M ELECTRODES SHALL NOT BE USED.

4.4 STEEL MEMBERS EXPOSED TO WEATHER SHALL BE PAINTED.

METAL STUDS AND JOISTS

5.1 LIGHT GAGE METAL FRAMING NOT SPECIFICALLY SHOWN ON THE DRAWINGS SHALL BE DESIGN-BUILD BY THE LIGHT GAGE METAL CONTRACTOR. THE STUD TYPE, CONNECTION AND GAGE SHALL BE DETERMINED BY THE CONTRACTOR. CONTRACTOR SHALL SUBMIT STRUCTURAL CALCULATIONS BY A PROFESSIONAL OR STRUCTURAL ENGINEER LICENSED IN THE STATE OF CALIFORNIA FOR APPROVAL BY THE PROJECT ENGINEER. CALCULATIONS SHALL INCLUDE, BUT ARE NOT LIMITED TO:

5.1.1 DESCRIPTION OF DESIGN CRITERIA.
5.1.2 ENGINEERING ANALYSIS DEPICTING STRESS AND DEFLECTION (STIFFNESS) REQUIREMENTS FOR EACH FRAMING APPLICATION.
5.1.3 SELECTION OF FRAMING COMPONENTS AND ACCESSORIES.
5.1.4 VERIFICATION OF ATTACHMENTS TO STRUCTURE AND/OR ADJACENT FRAMING COMPONENTS.

5.2 FRAMING AND CONNECTIONS SPECIFICALLY CALLED OUT ON THESE DRAWINGS SHALL BE CONSTRUCTED IN ACCORDANCE WITH THESE DRAWINGS. FRAMING IS CALLED OUT IN ACCORDANCE WITH THE STRUCTURAL SHEET METAL ASSOCIATION PRODUCT TECHNICAL INFORMATION.

5.3 STUD IDENTIFICATION SHALL BE AS SHOWN:

600 S 162 – 54 (50 KSI)

- MEMBER DEPTH: (EXAMPLE: 6"=600x1/100 INCHES) ALL MEMBER DEPTHS ARE TAKEN IN 1/100 INCHES FOR ALL "T" SECTIONS MEMBER DEPTH IS THE INSIDE TO INSIDE DIMENSION.
- FLANGE WIDTH: (EXAMPLE: 1 5/8"=1.625"=162x1/100 INCHES) ALL FLANGE WIDTHS ARE TAKEN IN 1/100 INCHES.
- STEEL YIELD STRENGTH: (EXAMPLE: 50 ksi) STEEL YIELD STRENGTH REQUIRED IF OTHER THAN 33 KSI
- MATERIAL THICKNESS: (EXAMPLE: 0.054 IN.=54 MILS; 1 MIL.=1/100 IN.) MATERIAL THICKNESS IS THE MINIMUM BASE METAL THICKNESS IN MILS. MIN. BASE METAL THICKNESS REPRESENTS 95% OF THE DESIGN THICKNESS.
- STYLE: (EXAMPLE: STUD OR JOIST SECTION=S) THE FOUR ALPHA CHARACTERS UTILIZED BY THE DESIGNATOR SYSTEM ARE:

S=STUD OR JOIST SECTIONS U=CHANNEL SECTIONS
T=TRACK SECTIONS F=FURRING CHANNEL SECTIONS

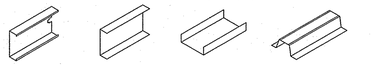

C-STUD/JOIST S-SECTIONS | TRACK T-SECTIONS | CHANNEL U-SECTIONS | FURRING CHANNEL F-SECTIONS

THICKNESS-STEEL COMPONENTS			
MINIMUM THICKNESS* (MILS)	DESIGN THICKNESS (IN)	INSIDE CORNER RADII (IN)	REF. ONLY GA. NO.
18	0.0188	0.0843	25
27	0.0283	0.0796	22
30	0.0312	0.0781	20-DRYWALL
33	0.0346	0.0764	20-STRUCTURAL
43	0.0451	0.0712	18
54	0.0566	0.0849	16
68	0.0713	0.1069	14
97	0.1017	0.1525	12

* MINIMUM THICKNESS REPRESENTS 95% OF THE DESIGN THICKNESS AND IS THE MINIMUM ACCEPTABLE THICKNESS DELIVERED TO THE JOB SITE BASED ON SECTION A2.4 OF THE 2001 AISI SPECIFICATION.

DESIGN STIFFENING LIP LENGTH		
SECTION	FLANGE WIDTH	DESIGN STIFFENING LIP LENGTH (IN)
S125	1 1/4"	0.188
S137	1 3/8"	0.375
S162	1 5/8"	0.500
S200	2"	0.625
S250	2 1/2"	0.625

5.4 STEEL MEMBERS SHALL HAVE A MINIMUM YIELD STRENGTH OF 33 KSI UNLESS OTHERWISE NOTED. HIGHER STRENGTH STEEL SHALL BE INDICATED THUS: 362S137-54(50 KSI)

5.5 ALL FRAMING MEMBERS TO BE IN ACCORDANCE WITH ICC EVALUATION REPORT NUMBER ER-4943P.

5.6 ALL FRAMING COMPONENTS SHALL BE CUT SQUARE FOR ATTACHMENT TO PERPENDICULAR MEMBERS, OR AS REQUIRED FOR AN ANGULAR FIT AGAINST ABUTTING MEMBERS. MEMBERS SHALL BE HELD POSITIVELY IN PLACE UNTIL PROPERLY FASTENED.

5.7 ALL PRODUCTS TO BE MANUFACTURED BY THE CURRENT MEMBERS OF THE STEEL STUD MANUFACTURERS ASSOCIATION.

5.8 ALL GALVANIZED JOISTS SHALL BE FORMED FROM STEEL THAT CORRESPONDS TO THE MINIMUM REQUIREMENTS OF 2007 A.I.S.I. STANDARDS.

5.9 ALL STRUCTURAL MEMBERS SHALL BE DESIGNED IN ACCORDANCE WITH THE AMERICAN IRON AND STEEL INSTITUTE (AISI) "SPECIFICATION FOR THE DESIGN OF COLD-FORMED STEEL STRUCTURAL MEMBERS" 2007 EDITION.

5.10 PROVIDE ALL ACCESSORIES INCLUDING, BUT NOT LIMITED TO TRACKS, CLIPS, WEB STIFFENERS, ANCHORS, FASTENING DEVICES, RESILIENT CLIPS, AND OTHER ACCESSORIES REQUIRED FOR A COMPLETE AND PROPER INSTALLATION, AND AS RECOMMENDED BY THE MANUFACTURER FOR THE STEEL MEMBERS USED.

5.11 FASTENING COMPONENTS SHALL BE WITH SELF-DRILLING SCREWS OR WELDING. SCREWS OR WELDS SHALL BE OF SUFFICIENT SIZE TO INSURE THE STRENGTH OF THE CONNECTION. ALL WELDS OF GALVANIZED STEEL SHALL BE TOUCHED UP WITH A ZINC RICH PAINT. WIRE TYING OF COMPONENTS SHALL NOT BE PERMITTED.

5.12 TEMPORARY BRACING WHERE REQUIRED, SHALL BE PROVIDED UNTIL ERECTION IS COMPLETE.

5.13 PROVISIONS FOR STRUCTURAL VERTICAL MOVEMENT SHALL BE PROVIDED WHERE INDICATED ON THE DRAWINGS.

METAL DECKING

6.1 MATERIALS AND WORKMANSHIP SHALL CONFORM TO THE MANUFACTURER'S RECOMMENDATIONS AND ICC APPROVALS.

6.2 DECK MANUFACTURERS OTHER THAN AS SPECIFIED ARE ACCEPTABLE SUBJECT TO THE ENGINEER'S APPROVAL. THE GENERAL DECK CONFIGURATION, DEPTH, AND PROPERTIES SHALL BE COMPARABLE TO THAT AS SPECIFIED.

6.3 ALL DECKING SHALL BE PHOSPHATIZED PAINTED.

SHEET INDEX

S1.0 GENERAL NOTES AND CARPORT PLANS
S2.0 STRUCTURAL DETAILS

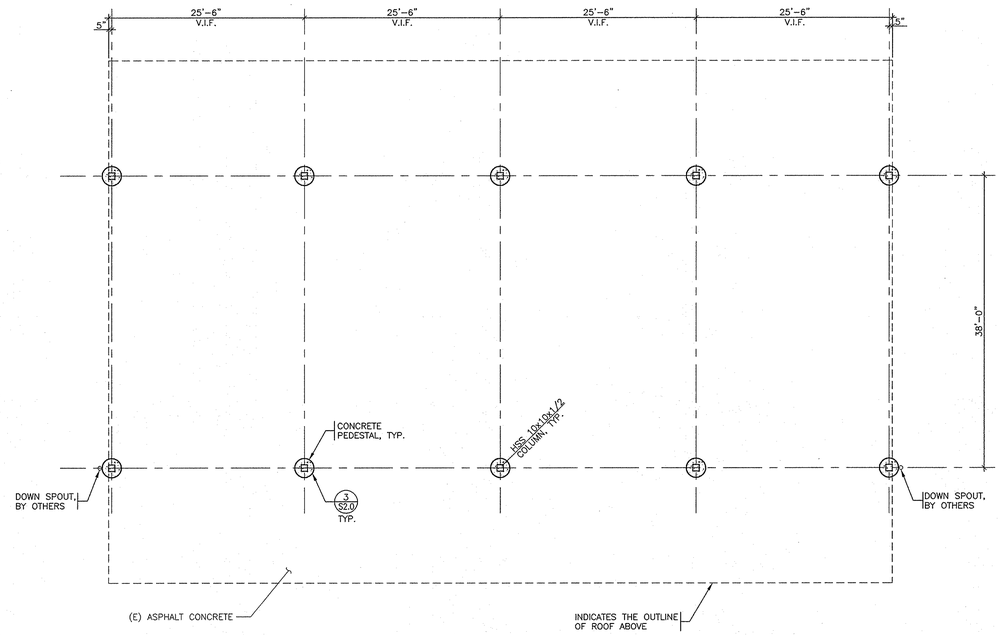

CARPORT FOUNDATION PLAN

SCALE: 1/8"=1'-0"

NOTES:
1. SEE GENERAL NOTES ON THIS SHEET

REFERENCE NORTH

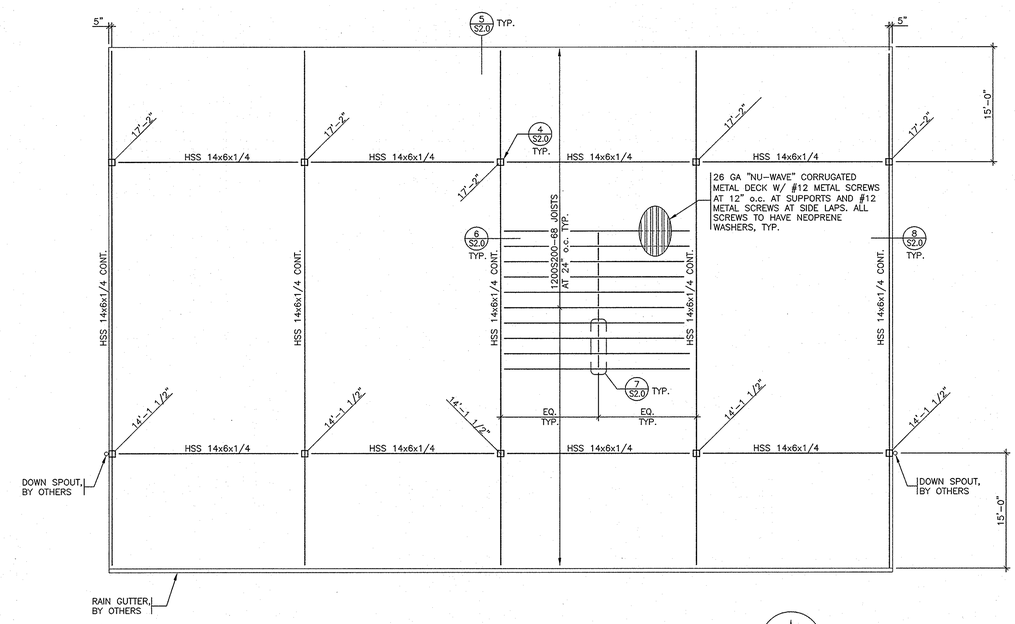

CARPORT FRAMING PLAN

SCALE: 1/8"=1'-0"

NOTES:
1. SEE GENERAL NOTES ON THIS SHEET

REFERENCE NORTH

REVISIONS

STRUCTURAL ENGINEERS INCORPORATED
4970 El Camino Real, Suite 100
Los Altos, CA 94022
(650) 938-2200 FAX (650) 938-5538

REGISTERED PROFESSIONAL ENGINEER PAUL E. SLATTERY No. S 4348 Exp. 06/30/12 STRUCTURAL STATE OF CALIFORNIA

CITY OF SARATOGA CARPORT

19700 ALLENDALE AVE.
SARATOGA, CA

This drawing is an instrument of service only and is, and shall remain the exclusive property of Structural Engineers Inc. No reproduction or other use shall be made by any person or firm without the express written permission of Structural Engineers Inc. Unauthorized use shall void the Engineer's seal and signature hereon and no professional responsibility will remain.

JOB NO:	3635.00
DRAWN BY:	KH
CHECK BY:	CK
SCALE:	AS SHOWN
DATE:	05.31.11

GENERAL NOTES AND CARPORT PLANS

SHEET

S1.0

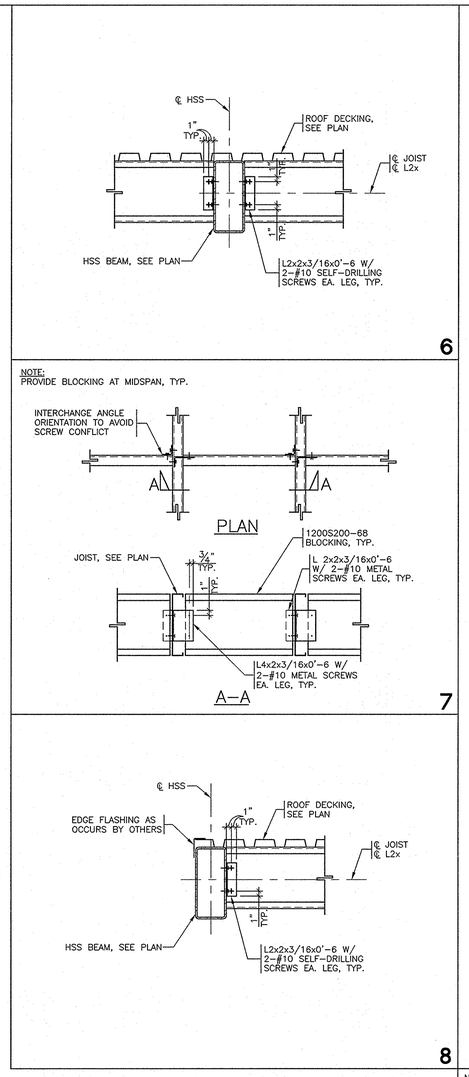

REVISIONS

STRUCTURAL ENGINEERS INCORPORATED
4970 El Camino Real, Suite 100
Los Altos, CA 94022
(650) 938-2200 FAX (650) 938-5538

REGISTERED PROFESSIONAL ENGINEER PAUL E. SLATTERY No. S 4348 Exp. 03/31/12 STRUCTURAL STATE OF CALIFORNIA

CITY OF SARATOGA CARPORT

19700 ALLENDALE AVE.
SARATOGA, CA

This drawing is an instrument of service only and is and shall remain the exclusive property of Structural Engineers Inc. No reproduction or other use shall be made by any person or firm without the express written permission of Structural Engineers Inc. Unauthorized use shall void the Engineer's seal and signature hereon and no professional responsibility will remain.

JOB NO:	3635.00
DRAWN BY:	KH
CHECK BY:	CK
SCALE:	AS SHOWN
DATE:	05.31.11

STRUCTURAL DETAILS

SHEET

S2.0