CITY OF SARATOGA, CALIFORNIA

ADDENDUM NO. 2

FOR

CORPORATION YARD BUILDING SOLAR PROJECT

Attached is Addendum No. 2 which consists of:

- This cover sheet.
- Addendum No. 2.

Each bidder must acknowledge receipt of this Addendum by checking the appropriate space and signing the Bid Proposal (page 15 of the Construction Agreement).

October 20, 2011

ADDENDUM No. 2

CITY OF SARATOGA

CORPORATION YARD BUILDING SOLAR PROJECT

Clarifications and additional information:

1. Modules shall be placed parallel to roof edges, not facing true south.

2. Existing 1 ½" conduit from the existing outside panel to parking lot could be intercepted and used for feeding electrical power from the new inverters to the outside panel. Exact location of the conduit shall be

3. Structural Calculations prepared by TKJ Structural Engineering dated September 19, 2011 are attached.

4. Power usage for the Corporation Yard building (various months) is attached

All the documents including this addendum are available for downloading from the City of Saratoga web site at http://www.saratoga.ca.us/services/bidrequest.asp?bidID=79 ("What's New" – "Bids and RFPs")

Questions may be directed to Iveta Harvancik at (408)-868-1274 (fax and phone) or at iharvancik@saratoga.ca.us.

Attachments: Power usage for Corporation Yard Building (3 pages)

Structural Calculations (24 pages)

Pacific Gas and Electric Company
CMT Reports/Account Services

Sales and Charges #3 - System Level
Energy Report
[By Service Agreement, Date]

City of Saratoga (SJO / 8008598)

SA Id:4178866220 **Open: Y** Bus Act Desc: CORP YARD Svc Descriptor: CORP YARD BLDG **From Oct 1, 2010 to Sep 30, 2011**

Per Name: CITY OF SARATOGA Meter #: 8G9210 Billing Addr: 13777 FRUITVALE AVE, SARATOGA, CA 95070
Acct Id: 4178866749 Service Addr: 19700 ALLENDALE AVE, SARATOGA, CA 95070

Date	Days	Rate	Gas Charges (Dollars)	Therms	Electric Charges (Dollars)	On-Peak Usage (kwh)	Part-Peak Usage (kwh)	Off-Peak Usage (kwh)	Total Usage (kwh)	Hours	Billing Demand (kW)	Created Demand (kW)	On-Peak Demand (kW)	Part-Peak Demand (kW)	Off-Peak Demand (kW)	Taxes
08/23/2011	32	A1			451.80	659	554	1,031	2,244	0	0	0	0	0	0	0.65
07/22/2011	30	A1			411.98	645	482	918	2,045	0	0	0	0	0	0	0.59
06/22/2011	29	A1			364.97	463	432	913	1,808	0	0	0	0	0	0	0.52
05/24/2011	29	A1			337.43	330	483	931	1,744	0	0	0	0	0	0	0.51
04/25/2011	32	A1			285.82	0	794	1,080	1,874	0	0	0	0	0	0	0.54
03/24/2011	29	A1			264.81	0	758	983	1,741	0	0	0	0	0	0	0.51
02/23/2011	30	A1			278.05	0	812	1,035	1,847	0	0	0	0	0	0	0.54
01/24/2011	33	A1			273.43	0	724	1,092	1,816	0	0	0	0	0	0	0.49
Total for 2011:			0.00	0	2,668.29	2,097	5,039	7,983	15,119	0						4.35
12/22/2010	30	A1			265.14	0	771	1,012	1,783	0	0	0	0	0	0	0.39
11/22/2010	32	A1			299.16	111	646	1,041	1,798	0	0	0	0	0	0	0.39
10/21/2010	29	A1			392.57	517	464	945	1,926	0	0	0	0	0	0	0.42
Total for 2010:			0.00	0	956.87	628	1,881	2,998	5,507	0						1.20
Total for SA id: 4178866220:			0.00	0	3,625.16	2,725	6,920	10,981	20,626	0						5.55
Report Total:			0.00	0	3,625.16	2,725	6,920	10,981	20,626	0						5.55

[CONFIDENTIAL INFORMATION]

Pacific Gas and Electric Company

DATE: 05/04/2010

PG&E Bill Comparison Results

Customer Profile

Service ID:	4178866220	Name:	CITY OF SARATOGA	DA Code:	FULL SERVICE
Old Account:	XVJ3106361	Service Address:	19700 ALLENDALE AVE	City:	SARATOGA
Account:	4178866749	Supply:	CORP YARD	Voltage:	SECONDARY
NAICS:	811111	Meter Code:	TOU5-COMB ON/PT/OF/TOT-KWH	RTM:	N
Meter No:	8G9210	Rate Schedule:	A6	Split Bill:	0000000000000

Rates are effective **03/01/10** unless otherwise noted.

Estimated Costs for Bundled Rates

		Best				
FROM	TO	A1 Bills	A6 Bills	A10S Bills	E19SV Bills	A10SX Bills
12/21/09	01/21/10	$280.64	$280.22	$363.97	$354.10	$362.64
01/21/10	02/22/10	$303.83	$302.86	$384.81	$372.12	$383.32
02/22/10	03/24/10	$288.96	$291.58	$359.49	$345.90	$358.93
03/23/09	04/23/09	$297.44	$302.93	$369.46	$355.69	$369.55
04/23/09	05/21/09	$356.96	$400.82	$417.70	$427.14	$417.33
05/21/09	06/23/09	$440.56	$509.03	$488.13	$496.60	$487.94
06/23/09	07/23/09	$475.75	$594.06	$524.19	$560.24	$528.86
07/23/09	08/21/09	$500.26	$601.29	$537.59	$568.56	$540.03
08/21/09	09/22/09	$498.06	$592.98	$558.59	$600.02	$560.07
09/22/09	10/21/09	$457.63	$528.06	$507.76	$540.47	$507.54
10/21/09	11/19/09	$313.58	$327.64	$392.77	$401.58	$391.07
11/19/09	12/21/09	$315.57	$315.50	$414.20	$410.07	$412.94
Install/Process Charge						$2,687.58
12 Month Total		$4,529.24	$5,046.97	$5,318.66	$5,432.49	$8,007.80

change to A1 7/29/10

Usage and Demand Values

FROM	TO	kWh	On kWh	Part kWh	Off kWh	TOU kWh est?	Max Demand	Max dmd est?	On Demand	Part Demand	Off Demand	TOU dmd est?
12/21/09	01/21/10	1826	0	784	1042	N	6	Y	0	6	6	Y
01/21/10	02/22/10	1980	0	846	1134	N	6	Y	0	6	6	Y
02/22/10	03/24/10	1884	0	885	999	N	5	Y	0	5	5	Y
03/23/09	04/23/09	1939	0	972	967	N	5	Y	0	5	5	Y
04/23/09	05/21/09	1800	362	582	856	N	6	Y	5	6	6	Y
05/21/09	06/23/09	2102	568	519	1015	N	5	Y	5	5	5	Y
06/23/09	07/23/09	2278	744	581	953	N	7	Y	7	6	7	Y
07/23/09	08/21/09	2399	718	603	1078	N	7	Y	7	7	7	Y
08/21/09	09/22/09	2384	712	533	1139	N	8	Y	8	7	8	Y
09/22/09	10/21/09	2191	595	531	1065	N	7	Y	7	7	7	Y
10/21/09	11/19/09	1780	158	660	962	N	7	Y	7	7	7	Y
11/19/09	12/21/09	2059	0	906	1153	N	9	Y	0	9	9	Y
Total		24,622	3,857	8,402	12,363							

Pacific Gas and Electric Company

Fax

Attention:	**City of Saratoga**	**From:**	**PG&E Ag Service Center** ☐
			PG&E Business Customer Svc Ctr x
Customer:	**Shaaheen Sarwari**	**Acct #**	**4178866749-5**
Fax:	**408.868.1239**	**Date:**	**September 23, 2011**
Phone:	**408.868.1239**	**Pages**	**1 (Cover Only)**
Re:	**Usage/Billing 7/22 – 8/23**	**CC:**	

☐ **Urgent** x **For Review** ☐ **Please Comment** ☐ **Please Reply** ☐ **Please Recycle**

Elec Mtr #8G9210 Usage 7/22/11 - 8/23/11
$452.45 - 2,244 KwH

Elec Mtr #1009444354 Usage 7/22/11 - 8/23/11
$61.72 - 243 KwH

If you have any further questions, please contact us at:

Business Customer Service Center 1-800-468-4743 (4PGE)

Hours: Monday – Friday 7:00 AM – 7:30 PM & **Sat** 8:00 AM – 4:30 PM

Please also visit our website at *PGE.COM* for information on Rebates, Energy efficiency and other important information!

Pacific Gas and Electric Company

1330 Orange Ave., Suite 301
Coronado, CA 92118
p: 619.869.6234
f: 619.996.2026
e: tkj@tkjse.com

STRUCTURAL CALCULATIONS

AND DETAILS

For:

City of Saratoga
19700 Allendale Avenue
Saratoga, CA 95070

Date: September 19, 2011

TKJSE Job No: 11040.00

PROJECT DESCRIPTION:

Client: **City of Saratoga**

Property: **19700 Allendale Avenue**
Saratoga, CA 95070

DESCRIPTION OF WORK:

The project consists solely of designing and evaluating the support and anchorage of the solar panel assemblies shown.
The design or anchorage of all other components are the responsibility of others.

Project:	**Saratoga Corp. Bldg.**
Job No.:	**11040**
Date:	**9/19/11**

ROOFTOP SOLAR RACK ASSEMBLY DESIGN: LOADING

PANEL ASSEMBLY DEAD LOAD TAKE-OFF:

Alum. Strut Frame =	**1.0 psf**
Panels, collectors =	**2.0 psf**
Misc. =	**1.0 psf**
Total =	4.0 psf

WIND LOADING: ASCE 7-05, SEC. 6.5.15, 6.5.8, TABLE 6-2, TABLE 6-4 & FIG. 6-21

CALCULATIONS:			SOURCES/MESSAGES:
Exposure:	**B**		
h_r (ft) =	**9.00 ft**		[Ht. to roof]
L (ft) =	**3.33 ft**		
θ° =	**10**	degrees	
z_g (ft) =	1200.0 ft		[Table 6-2]
α =	7.0		
z (centroid of panel) =	9.3 ft		z < 15'

$$q_z = 0.00256 k_z k_{zt} k_d V^2 I$$

			[Sec. 6.5.10]
K_z =	0.575		[Table 6-3]
K_{zt} =	**1.0**		[Sec. 6.5.7.2]
K_d =	**0.85**		[Table 6-4]
V (mph) =	**85 mph**		[Fig. 6-1]
I =	**1.0**		[Table 6-1]
q_z (psf) =	9.04 psf		

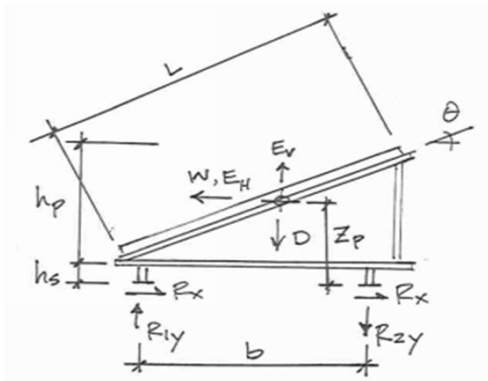

$$F = q_z G C_f A_f C$$

G =	**0.85**		[6.5.8.1]
h/D <	**1**		[Fig. 6-21] [h=h_p, D=B=width of panel array]
Cross Section =	**Square (wind normal to face)**		
C_f =	1.3		
B (ft) =	**110 ft**	1.9	[A_f < 0.1Bh] [Sec. 6.5.15.1]
A_f (ft^2) =	63.67 sf		
C (interpolate) =	1.90	1.0	[A_f > Bh]
F_w (A_f)=	19.0	A_f	[10 psf min.]

Project:	**Saratoga Corp. Bldg.**
Job No.:	**11040**
Date:	**9/19/11**

ROOFTOP SOLAR RACK ASSEMBLY DESIGN: ANCHORAGE

SUPPORT REACTIONS:

D + W

0.6D + W

SOURCES/MESSAGES:

ANCHORAGE CONNECTIONS:

CASE 1 - MAX UPLIFT: 0.6D + W

$\Sigma M_L = 0$:

s_a (ft) =	**8.0 ft**	o.c.	[Anchorage support spacing]
h_p (ft) =	0.60 ft		[Height of panel]
h_s (ft)	**0.5 ft**		
A_f (ft^2) = h_p*s_a =	4.80 sf		
F_W (#) =	91.1 #		
z_p (ft) = h_s + h_p/2 =	0.80 ft		
W_p (#) =	106.7 #		
b (ft) =	**3.0 ft**		

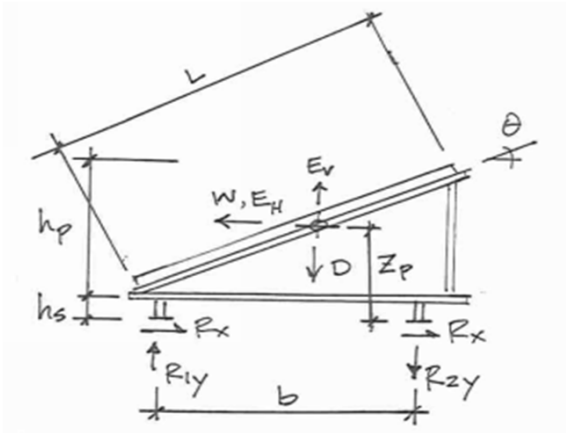

	D	W
R_{Ry} (#) =	53.3 #	-24.3 #
0.6D + W (#) =	-7.7 # uplift	

$\Sigma F_x = 0$:

R_x (#) = F_w/2 =	**45.5 # shear**

CASE 2a - MAX DOWNWARD: D + W

$\Sigma M_R = 0$:

	D	W
R_{Ly} (#) =	**53.3 #**	**24.3 #**
D + W (#) =	77.6 # down	

'Z' Channel Properties

A570 Gr50 cold form
S9 x 12 ga

Bentley Microsoft

Current Date: 9/18/2011 8:51 PM
Units system: English
File name: C:\Users\tjwei\Documents\TKJ Structural Engineering\Projects\11040 - City of Saratoga - Solar\Calcs\Ram Elements\S channel.etz\
Load condition: DL=Dead Load

Dead Load

Loads

- Global distributed - Members
- Local distributed - Members
- Concentrated - Members

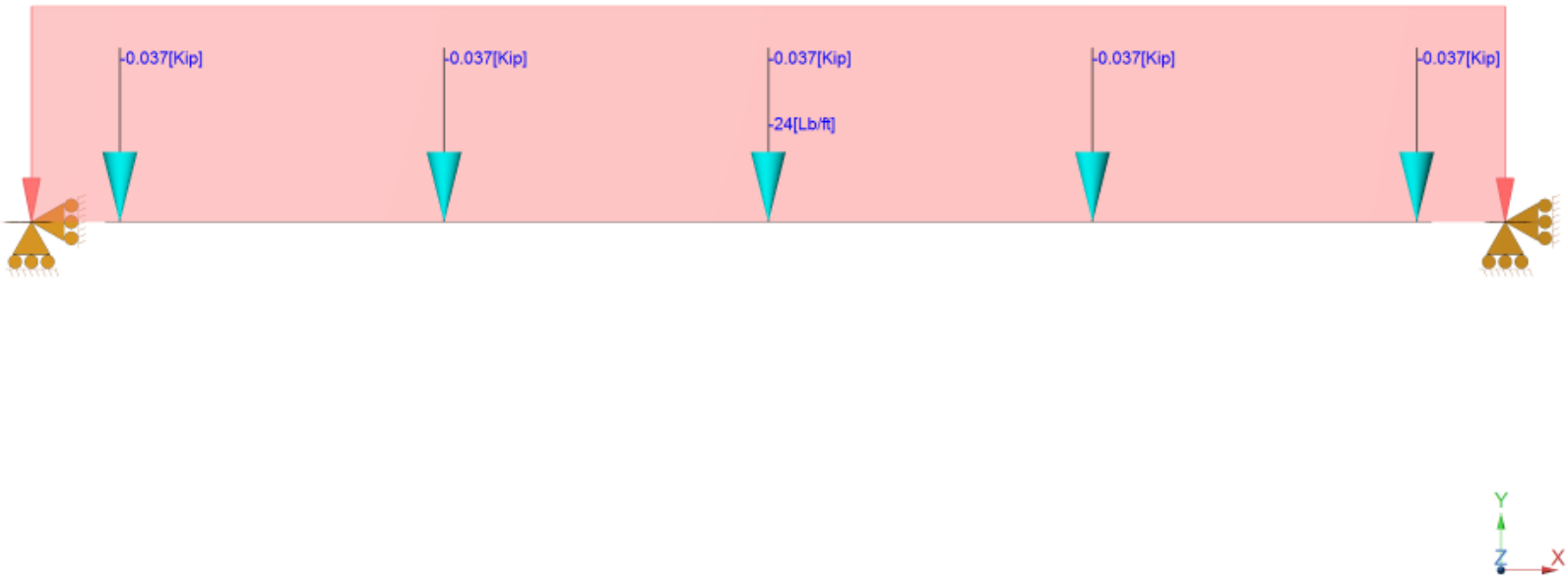

Bentley Microsoft

Current Date: 9/18/2011 8:51 PM
Units system: English
File name: C:\Users\tjwei\Documents\TKJ Structural Engineering\Projects\11040 - City of Saratoga - Solar\Calcs\Ram Elements\S channel.etz\
Load condition: LL=Live Load

Live Load

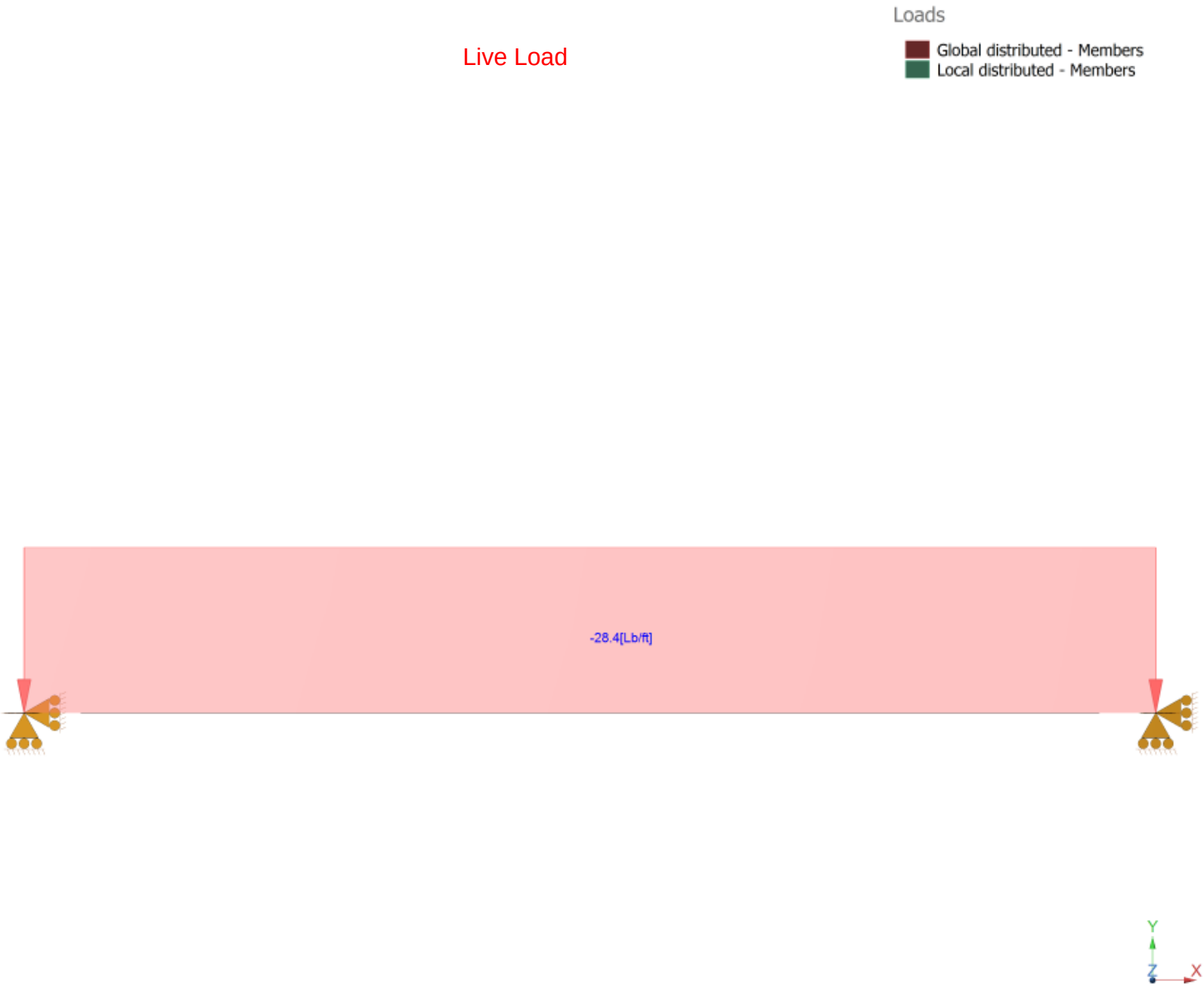

Bentley Microsoft

Current Date: 9/18/2011 8:52 PM
Units system: English
File name: C:\Users\tjwei\Documents\TKJ Structural Engineering\Projects\11040 - City of Saratoga - Solar\Calcs\Ram Elements\S channel.etz\
Load condition: WL=Wind Load

Wind Load

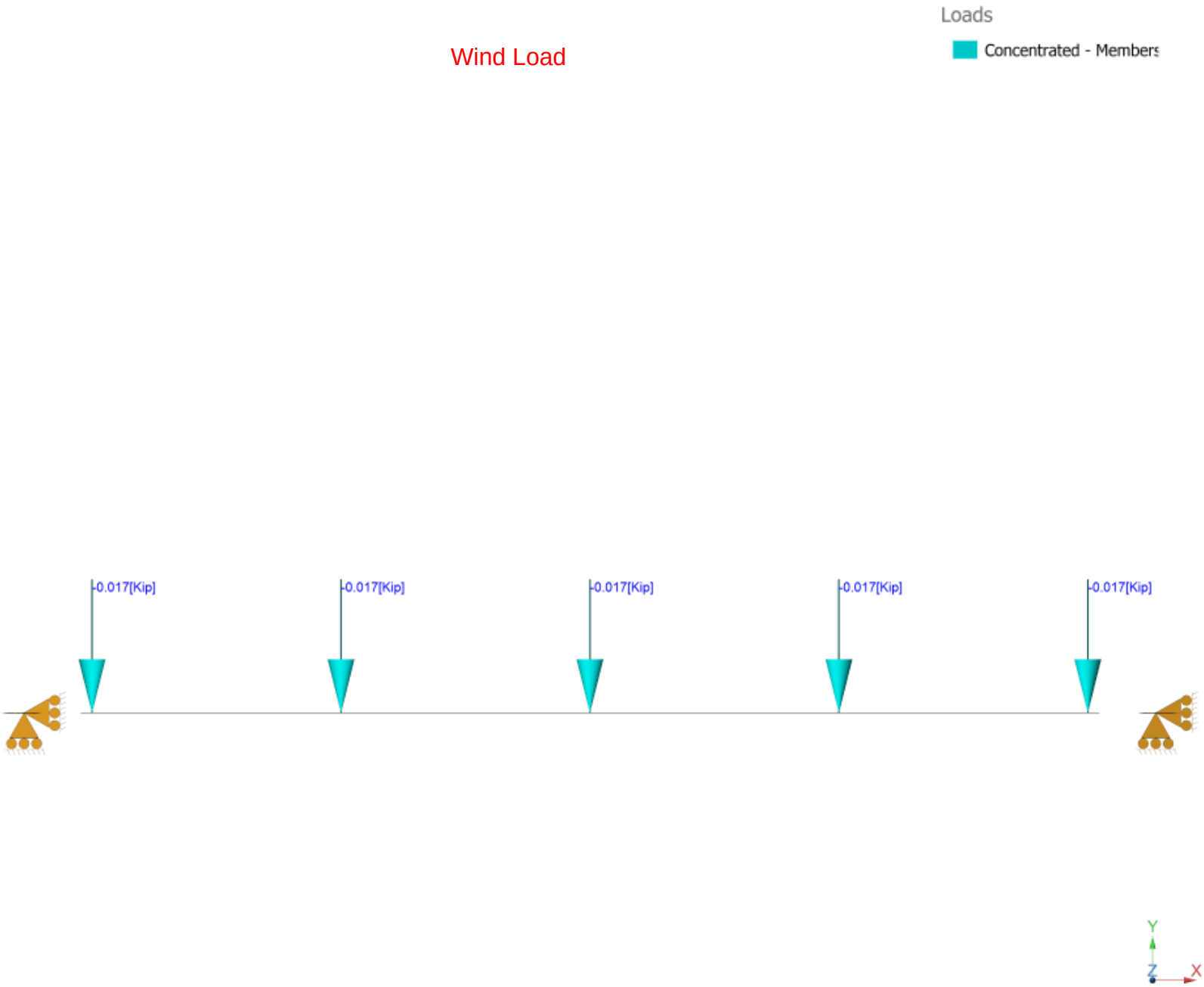

Bentley Microsoft

Current Date: 9/18/2011 8:53 PM
Units system: English
File name: C:\Users\tjwei\Documents\TKJ Structural Engineering\Projects\11040 - City of Saratoga - Solar\Calcs\Ram Elements\S channel.etz\

Steel Code Check

Report: Concise

Members: Cold-formed
Design code: AISI 2001 & Sup. 2004 ASD

Member	:	**1**
Design status	:	**OK**

PROPERTIES

Section information

Section name: S9 x 12 ga **(US)**

Dimensions

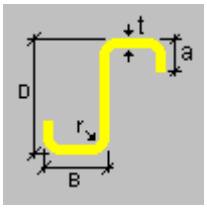

a	=	0.750	[in]	Flange
B	=	3.000	[in]	Flange width
D	=	9.000	[in]	Depth
r	=	0.188	[in]	Inside bend radius
t	=	0.100	[in]	Thickness

Properties

Section properties	**Unit**	**Major axis**	**Minor axis**
Gross area of the section. (Ag)	[in2]	1.565	
Moment of Inertia (principal axes) (I')	[in4]	18.814	2.610
Bending constant for moments (principal axis) (J')	[in]	0.000	0.000
Radius of gyration (principal axes) (r')	[in]	3.467	1.291
Saint-Venant torsion constant. (J)	[in4]	0.005	
Section warping constant. (Cw)	[in6]	39.255	
Distance from centroid to shear center (principal axis) (xo,yo)	[in]	0.000	0.000
Top elastic section modulus of the section (principal axis) (S'sup)	[in3]	4.181	0.885
Bottom elastic section modulus of the section (principal axis) (S'inf)	[in3]	4.181	0.885
Polar radius of gyration. (ro)	[in]	3.699	

Material : A570 Gr50 cold form

Description	Unit	Value
Yield stress (Fy):	[Kip/in2]	50.00
Tensile strength (Fu):	[Kip/in2]	65.30
Elasticity Modulus (E):	[Kip/in2]	29000.00
Shear modulus for steel (G):	[Kip/in2]	11507.94

DESIGN CRITERIA

Description	Unit	Major axis	Minor axis
Effective length factor (K)	--	1.00	1.00
Effective length factor for torsion	--	1.00	
Unbraced compression length (Lx, Ly)	[ft]	25.00	25.00
Length for torsion and lateral-torsional buckling	[ft]	25.00	
Lateral bracing	--	No	No
Additional hypotheses			
Bearing length	[in]	0.00	
Positive flange fastened		No	
Negative flange fastened		No	
Continuous lateral torsional restraint		No	

SERVICE CONDITIONS

Verification	Unit	Value	Ctrl EQ	Reference
Maximum geometric slenderness (L/r)	--	231.73		(Com. C4F)
Geometric slenderness (KL/r)	--	231.73		
- Slenderness greater than recommended (KL/r 200)				

DESIGN CHECKS

DESIGN FOR FLEXURE ✔

Bending about major axis, M33

Ratio	:	0.59			
Capacity	:	7.81 [Kip*ft]	Reference	:	(Sec. C3)
Demand	:	4.64 [Kip*ft]	Ctrl Eq.	:	D2 at 50.00%

Intermediate results	Unit	Value	Reference
Nominal flexural strength (Mnx)	[Kip*ft]	13.03	(Sec. C3)
Bending strength factor (ϕb)	--	1.67	(Sec. C3.1.1)

Bending about minor axis, M22

Ratio	:	0.00			
Capacity	:	1.94 [Kip*ft]	Reference	:	(Sec. C3)
Demand	:	0.00 [Kip*ft]	Ctrl Eq.	:	D1 at 0.00%

Intermediate results	Unit	Value	Reference
Nominal flexural strength (Mny)	[Kip*ft]	3.24	(Sec. C3)
Bending strength factor (ϕb)	--	1.67	(Sec. C3.1.1)

DESIGN FOR SHEAR ✔

Shear parallel to minor axis, V2

Ratio	:	0.07			
Capacity	:	10.13 [Kip]	Reference	:	(Sec. C3.2)
Demand	:	0.75 [Kip]	Ctrl Eq.	:	D2 at 0.00%

Intermediate results	Unit	Value	Reference
Nominal shear strength (Vn)	[Kip]	16.22	(Sec. C3.2)
Shear strength factor (ϕv)	--	1.60	(Sec. C3.2.1)

Shear parallel to major axis, V3

Ratio	:	0.00			
Capacity	:	9.09 [Kip]	Reference	:	(Sec. C3.2)
Demand	:	0.00 [Kip]	Ctrl Eq.	:	D1 at 0.00%

Intermediate results	Unit	Value	Reference
Nominal shear strength (Vn)	[Kip]	14.54	(Sec. C3.2)
Shear strength factor (ϕv)	--	1.60	(Sec. C3.2.1)

DESIGN FOR TENSION ✔

Tension

Ratio	:	0.00			
Capacity	:	47.01 [Kip]	Reference	:	(Eq. C2-1)
Demand	:	0.00 [Kip]	Ctrl Eq.	:	D1 at 0.00%

Intermediate results	Unit	Value	Reference
Nominal tension strength (Tn)	[Kip]	78.50	(Sec. C2)
Tension strength factor (ϕt)	--	1.67	(Sec. C2)

DESIGN FOR COMPRESSION ✔

Compression

Ratio	:	0.00			
Capacity	:	-4.08 [Kip]	Reference	:	(Sec. C4)
Demand	:	0.00 [Kip]	Ctrl Eq.	:	D1 at 0.00%

Intermediate results	Unit	Value	Reference
Nominal compression strength (Pn)	[Kip]	-7.34	(Eq. C4.1)
Compression strength factor (ϕc)	--	1.80	(Sec. C4-1)

DESIGN FOR TORSION ✔

Torsion

Ratio	:	0.00			
Capacity	:	0.08 [Kip*ft]	Reference	:	(AISC, Sec. H)
Demand	:	0.00 [Kip*ft]	Ctrl Eq.	:	D1 at 0.00%

Intermediate results	Unit	Value	Reference
Nominal torsion strength	[Kip*ft]	0.13	
Torsion strength factor (ϕ)	--	1.67	

DESIGN FOR CRIPPLING ✔

Web crippling strength

Ratio	:	0.22			
Capacity	:	3.39 [Kip]	Reference	:	(Sec. C3.4)
Demand	:	0.75 [Kip]	Ctrl Eq.	:	D2 at 0.00%

Intermediate results	Unit	Value	Reference
Nominal crippling strength (Pn)	[Kip]	5.59	(Eq. C3.4.1-1)
Crippling strength factor (ϕw)	--	1.65	(Tables C3.4.1)
Crippling strength factor (ϕw)	--	1.65	(Tables C3.4.1)

INTERACTION ✔

Combined bending and web crippling ratio

Ratio	:	0.32			
			Ctrl Eq.	:	D2 at 50.00%
			Reference	:	C3.5.1-1

***The equation has been modified for a maximum ratio equal to 1.0**

Combined bending and shear ratio (x-x)

Ratio	:	0.47			
			Ctrl Eq.	:	D2 at 50.00%
			Reference	:	C3.3.1-1

Combined bending and shear ratio (y-y)

Ratio	:	0.00			
			Ctrl Eq.	:	D1 at 0.00%
			Reference	:	C3.3.1-1

Combined flexure and tension ratio

Ratio : 0.59

Ctrl Eq. : D2 at 50.00%
Reference : C5.1.1-2

Combined flexure and compression ratio

Ratio : 0.59

Ctrl Eq. : D2 at 50.00%
Reference : C5.2.1-2

CRITICAL STRENGTH RATIO ✔

Ratio : 0.59
Ctrl Eq. : D2 at 50.00% Reference : C3.1

WF Tapered Beam Layout

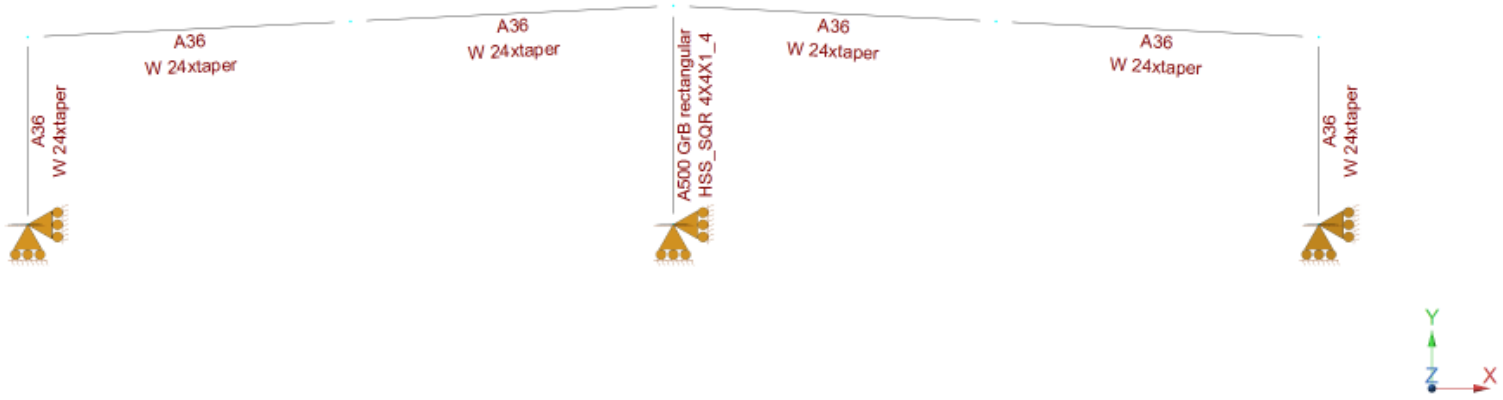

Bentley Microsoft

Current Date: 9/19/2011 1:51 PM
Units system: English
File name: C:\Users\tjwei\Documents\TKJ Structural Engineering\Projects\11040 - City of Saratoga - Solar\Calcs\Ram Elements\framing.etz\
Load condition: DL=Dead Load

Dead Load

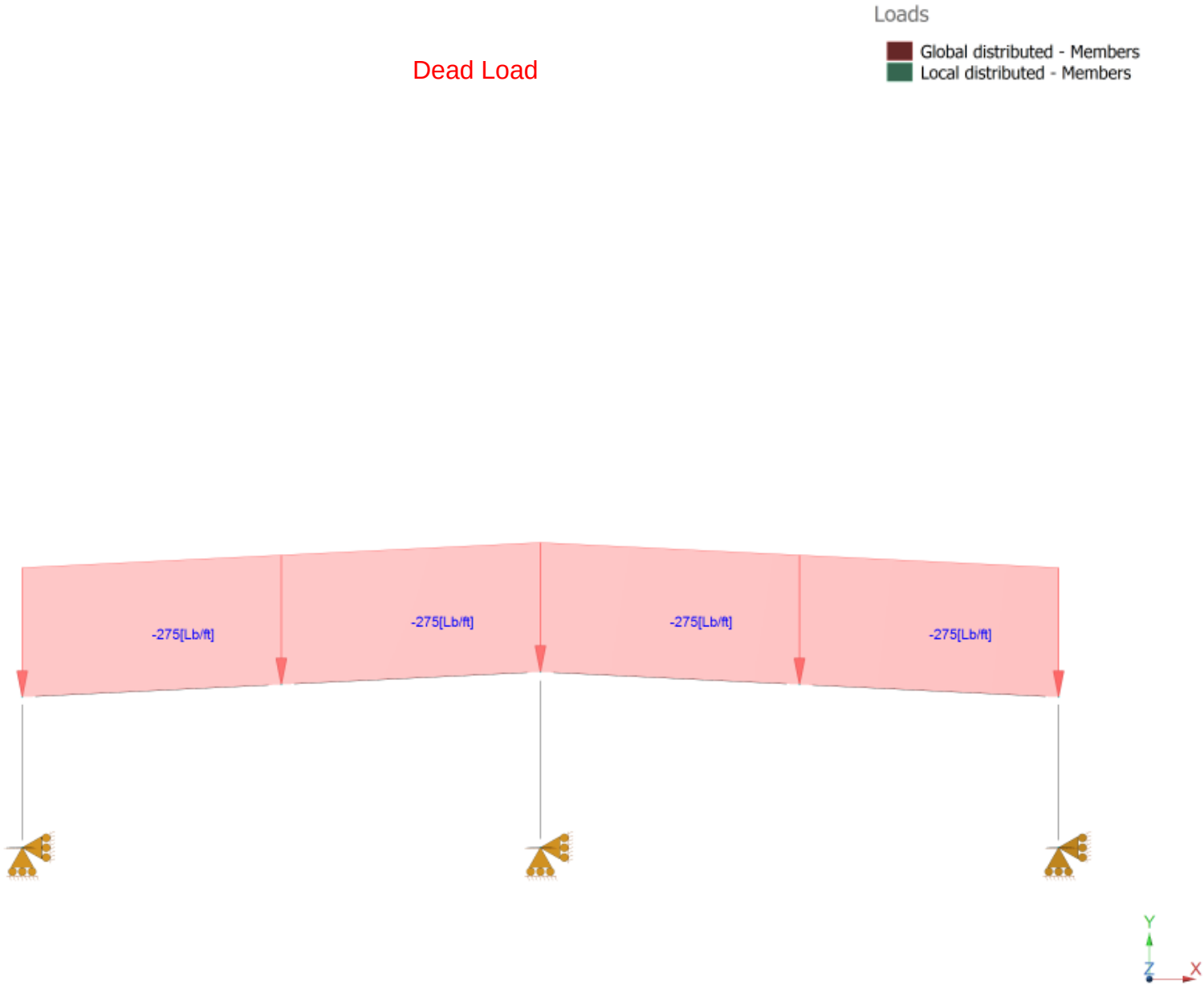

Bentley Microsoft

Current Date: 9/19/2011 1:52 PM
Units system: English
File name: C:\Users\tjwei\Documents\TKJ Structural Engineering\Projects\11040 - City of Saratoga - Solar\Calcs\Ram Elements\framing.etz\
Load condition: LL=Live Load

Live Load

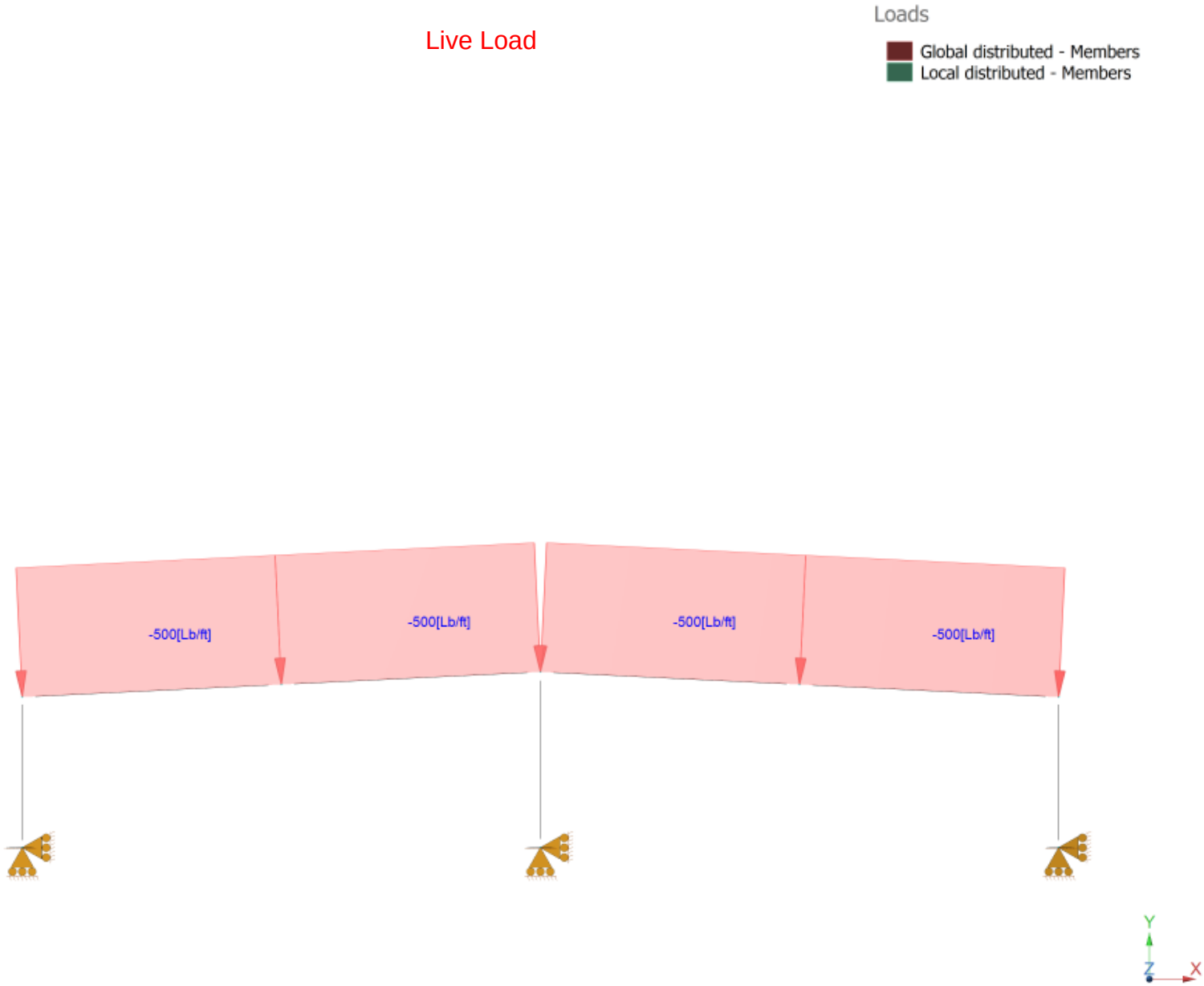

Maximum Stress Ratios

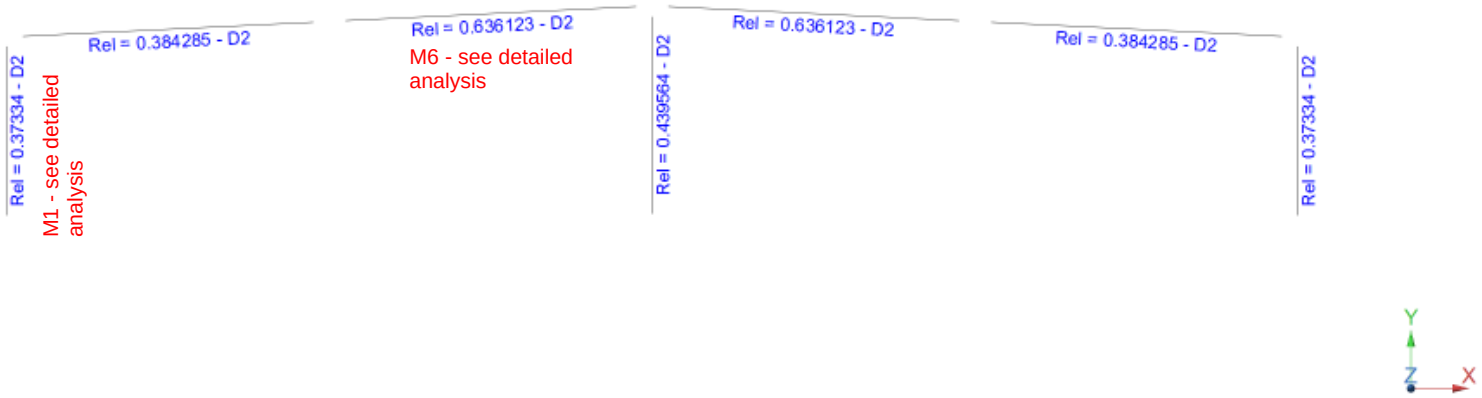

Bentley Microsoft

Current Date: 9/19/2011 1:54 PM
Units system: English
File name: C:\Users\tjwei\Documents\TKJ Structural Engineering\Projects\11040 - City of Saratoga - Solar\Calcs\Ram Elements\framing.etz\

Steel Code Check

Report: Concise

Members: Hot-rolled
Design code: AISC 360-05 LRFD

Member	:	**6 (bm)**
Design status	:	**OK**

PROPERTIES

Section information

Section name: W 24xtaper **(US)**

Dimensions

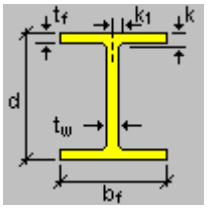

D	=	17.000	[in]	Calculation depth
bf	=	7.000	[in]	Width
d	=	23.000	[in]	Depth
k	=	1.000	[in]	Distance k
k1	=	1.000	[in]	Distance k1
tf	=	0.375	[in]	Flange thickness
tw	=	0.375	[in]	Web thickness

Properties

Section properties	**Unit**	**Major axis**	**Minor axis**
Gross area of the section. (Ag)	[in2]	11.485	
Moment of Inertia (local axes) (I)	[in4]	506.567	21.511
Moment of Inertia (principal axes) (I')	[in4]	506.567	21.511
Bending constant for moments (principal axis) (J')	[in]	0.000	0.000
Radius of gyration (local axes) (r)	[in]	6.641	1.369
Radius of gyration (principal axes) (r')	[in]	6.641	1.369
Saint-Venant torsion constant. (J)	[in4]	0.538	
Section warping constant. (Cw)	[in6]	1481.663	
Distance from centroid to shear center (principal axis) (xo,yo)	[in]	0.000	0.000
Top elastic section modulus of the section (local axis) (Ssup)	[in3]	59.589	6.146
Bottom elastic section modulus of the section (local axis) (Sinf)	[in3]	59.589	6.146
Top elastic section modulus of the section (principal axis) (S'sup)	[in3]	59.589	6.146
Bottom elastic section modulus of the section (principal axis) (S'inf)	[in3]	59.589	6.146
Plastic section modulus (local axis) (Z)	[in3]	69.565	9.188
Plastic section modulus (principal axis) (Z')	[in3]	69.565	9.188
Polar radius of gyration. (ro)	[in]	6.781	
Area for shear (Aw)	[in2]	5.250	6.235
Torsional constant. (C)	[in3]	1.436	

Material : A36

Properties	Unit	Value
Yield stress (Fy):	[Kip/in2]	36.00
Tensile strength (Fu):	[Kip/in2]	58.00
Elasticity Modulus (E):	[Kip/in2]	29000.00
Shear modulus for steel (G):	[Kip/in2]	11507.94

DESIGN CRITERIA

Description	Unit	Major axis	Minor axis
Top unbraced length between lateral supports (LbTop)	[ft]	15.52	
Bottom unbraced length between lateral supports (LbBop)	[ft]	15.52	
Effective length factor (K)	--	1.00	1.00
Effective length factor for torsion	--	1.00	
Length for tension slenderness (L)	[ft]	15.52	
Unbraced compression length (Lx, Ly)	[ft]	15.52	15.52
Length for torsion and lateral-torsional buckling	[ft]	15.52	
Additional hypotheses			
Continuous lateral torsional restraint		No	
Tension field action		No	

SERVICE CONDITIONS

Verification	Unit	Value	Ctrl EQ	Reference
Initial section				
Tension				
Maximum geometric slenderness (L/r)	--	122.09		(Sec. D1)
Compression				
Geometric critical slenderness (KL/r)	--	122.09		(Sec. E2)
Compression and flexure				
Deflection	[in]	-0.67	C1 at 0.00%	
Final section				
Tension				
Maximum geometric slenderness (L/r)	--	148.71		(Sec. D1)
Compression				
Geometric critical slenderness (KL/r)	--	148.71		(Sec. E2)
Compression and flexure				
Deflection	[in]	-0.67	C1 at 0.00%	

DESIGN CHECKS

DESIGN FOR FLEXURE (ϕ = 0.90) ✔

<u>Bending about major axis, M33</u>

Ratio	:	0.60			
Capacity	:	289.93 [Kip*ft]	Reference	:	(Sec. F)
Demand	:	-172.78 [Kip*ft]	Ctrl Eq.	:	D2 at 100.00%

Intermediate results	Unit	Value	Reference
Yielding (Mp)	[Kip*ft]	322.14	(Sec. F)
Lateral-torsional buckling (LTB Mn)	[Kip*ft]	322.14	(Sec. F)
Web local buckling (WLB Mn)	--	N/A	(Sec. F)
Local buckling (LB Mn)	--	N/A	(Sec. F)
Flange local buckling (FLB Mn)	--	N/A	(Sec. F)
Tension flange yielding (TFY Mn)	--	N/A	(Sec. F)

Bending about minor axis, M22

Ratio	:	0.00			
Capacity	:	24.81 [Kip*ft]	Reference	:	(Sec. F)
Demand	:	0.00 [Kip*ft]	Ctrl Eq.	:	D1 at 0.00%

Intermediate results	Unit	Value	Reference
Yielding (Mp)	[Kip*ft]	27.56	(Sec. F)
Flange local buckling (FLB Mn)	--	N/A	(Sec. F)

DESIGN FOR SHEAR ✔

Shear parallel to major axis, V3 (ϕ = 0.90)

Ratio	:	0.00			
Capacity	:	102.06 [Kip]	Reference	:	(Sec. G)
Demand	:	0.00 [Kip]	Ctrl Eq.	:	D1 at 0.00%

Shear parallel to minor axis, V2 (ϕ = 1.00)

Ratio	:	0.11			
Capacity	:	183.26 [Kip]	Reference	:	(Sec. G)
Demand	:	-19.90 [Kip]	Ctrl Eq.	:	D2 at 100.00%

DESIGN FOR TENSION (ϕ = 0.90) ✔

Tension

Ratio	:	0.00			
Capacity	:	299.20 [Kip]	Reference	:	(Sec. D)
Demand	:	0.00 [Kip]	Ctrl Eq.	:	D1 at 0.00%

DESIGN FOR COMPRESSION (ϕ = 0.90) ✔

Compression

Ratio	:	0.08			
Capacity	:	136.51 [Kip]	Reference	:	(Sec. E)
Demand	:	-11.53 [Kip]	Ctrl Eq.	:	D2 at 0.00%

INTERACTION ✔

Combined axial and flexure interaction value

Ratio	:	0.64			
Ctrl Eq.	:	D2 at 100.00%	Reference	:	(H1-1b)

Combined shear and torsion interaction value

Ratio	:	0.11			
Ctrl Eq.	:	D2 at 100.00%	Reference	:	(Ec. 4.9) DG 9

CRITICAL STRENGTH RATIO ✔

Ratio	:	0.64			
Ctrl Eq.	:	D2 at 100.00%	Reference	:	(H1-1b)

Member : 1 (col1)
Design status : OK

PROPERTIES

Section information

Section name: W 24xtaper **(US)**

Dimensions

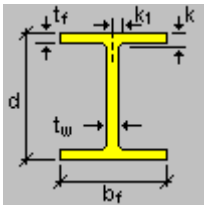

D	=	14.500	[in]	Calculation depth
bf	=	7.000	[in]	Width
d	=	23.000	[in]	Depth
k	=	1.000	[in]	Distance k
k1	=	1.000	[in]	Distance k1
tf	=	0.375	[in]	Flange thickness
tw	=	0.375	[in]	Web thickness

Properties

Section properties	Unit	Major axis	Minor axis
Gross area of the section. (Ag)	[in2]	10.547	
Moment of Inertia (local axes) (I)	[in4]	349.998	21.500
Moment of Inertia (principal axes) (I')	[in4]	349.998	21.500
Bending constant for moments (principal axis) (J')	[in]	0.000	0.000
Radius of gyration (local axes) (r)	[in]	5.761	1.428
Radius of gyration (principal axes) (r')	[in]	5.761	1.428
Saint-Venant torsion constant. (J)	[in4]	0.494	
Section warping constant. (Cw)	[in6]	1069.293	
Distance from centroid to shear center (principal axis) (xo,yo)	[in]	0.000	0.000
Top elastic section modulus of the section (local axis) (Ssup)	[in3]	48.275	6.143
Bottom elastic section modulus of the section (local axis) (Sinf)	[in3]	48.275	6.143
Top elastic section modulus of the section (principal axis) (S'sup)	[in3]	48.275	6.143

Bottom elastic section modulus of the section (principal axis) (S'inf)	[in3]	48.275	6.143
Plastic section modulus (local axis) (Z)	[in3]	55.783	9.187
Plastic section modulus (principal axis) (Z')	[in3]	55.783	9.187
Polar radius of gyration. (ro)	[in]	5.935	
Area for shear (Aw)	[in2]	5.250	5.297
Torsional constant. (C)	[in3]	1.318	

Material : A36

Properties	Unit	Value
Yield stress (Fy):	[Kip/in2]	36.00
Tensile strength (Fu):	[Kip/in2]	58.00
Elasticity Modulus (E):	[Kip/in2]	29000.00
Shear modulus for steel (G):	[Kip/in2]	11507.94

DESIGN CRITERIA

Description	Unit	Major axis	Minor axis
Top unbraced length between lateral supports (LbTop)	[ft]	9.00	
Bottom unbraced length between lateral supports (LbBop)	[ft]	9.00	
Effective length factor (K)	--	1.00	1.00
Effective length factor for torsion	--	1.00	
Length for tension slenderness (L)	[ft]	9.00	
Unbraced compression length (Lx, Ly)	[ft]	9.00	9.00
Length for torsion and lateral-torsional buckling	[ft]	9.00	
Additional hypotheses			
Continuous lateral torsional restraint		No	
Tension field action		No	

SERVICE CONDITIONS

Verification	Unit	Value	Ctrl EQ	Reference
Initial section				
Tension				
Maximum geometric slenderness (L/r)	--	63.24		(Sec. D1)
Compression				
Geometric critical slenderness (KL/r)	--	63.24		(Sec. E2)
Compression and flexure				
Deflection	[in]	0.05	C1 at 46.31%	
Final section				
Tension				
Maximum geometric slenderness (L/r)	--	86.25		(Sec. D1)
Compression				
Geometric critical slenderness (KL/r)	--	86.25		(Sec. E2)
Compression and flexure				
Deflection	[in]	0.05	C1 at 46.31%	

DESIGN CHECKS

DESIGN FOR FLEXURE (ϕ = 0.90) ✔

Bending about major axis, M33

Ratio	:	0.35			
Capacity	:	239.44 [Kip*ft]	Reference	:	(Sec. F)
Demand	:	-82.71 [Kip*ft]	Ctrl Eq.	:	D2 at 83.33%

Intermediate results	Unit	Value	Reference
Yielding (Mp)	[Kip*ft]	266.04	(Sec. F)
Lateral-torsional buckling (LTB Mn)	[Kip*ft]	266.04	(Sec. F)
Web local buckling (WLB Mn)	--	N/A	(Sec. F)
Local buckling (LB Mn)	--	N/A	(Sec. F)
Flange local buckling (FLB Mn)	--	N/A	(Sec. F)
Tension flange yielding (TFY Mn)	--	N/A	(Sec. F)

Bending about minor axis, M22

Ratio	:	0.00			
Capacity	:	24.81 [Kip*ft]	Reference	:	(Sec. F)
Demand	:	0.00 [Kip*ft]	Ctrl Eq.	:	D1 at 0.00%

Intermediate results	Unit	Value	Reference
Yielding (Mp)	[Kip*ft]	27.56	(Sec. F)
Flange local buckling (FLB Mn)	--	N/A	(Sec. F)

DESIGN FOR SHEAR ✔

Shear parallel to major axis, V3 (ϕ = 0.90)

Ratio	:	0.00			
Capacity	:	102.06 [Kip]	Reference	:	(Sec. G)
Demand	:	0.00 [Kip]	Ctrl Eq.	:	D1 at 0.00%

Shear parallel to minor axis, V2 (ϕ = 1.00)

Ratio	:	0.24			
Capacity	:	45.57 [Kip]	Reference	:	(Sec. G)
Demand	:	-11.03 [Kip]	Ctrl Eq.	:	D2 at 0.00%

DESIGN FOR TENSION (ϕ = 0.90) ✔

Tension

Ratio	:	0.00			
Capacity	:	238.46 [Kip]	Reference	:	(Sec. D)
Demand	:	0.00 [Kip]	Ctrl Eq.	:	D1 at 0.00%

DESIGN FOR COMPRESSION (ϕ = 0.90) ✔

Compression

Ratio	:	0.08			
Capacity	:	193.18 [Kip]	Reference	:	(Sec. E)
Demand	:	-15.71 [Kip]	Ctrl Eq.	:	D2 at 0.00%

INTERACTION ✔

Combined axial and flexure interaction value

Ratio	:	0.37			
Ctrl Eq.	:	D2 at 77.78%	Reference	:	(H1-1b)

Combined shear and torsion interaction value

Ratio	:	0.24			
Ctrl Eq.	:	D2 at 0.00%	Reference	:	(Ec. 4.9) DG 9

CRITICAL STRENGTH RATIO ✔

Ratio	:	0.37			
Ctrl Eq.	:	D2 at 77.78%	Reference	:	(H1-1b)