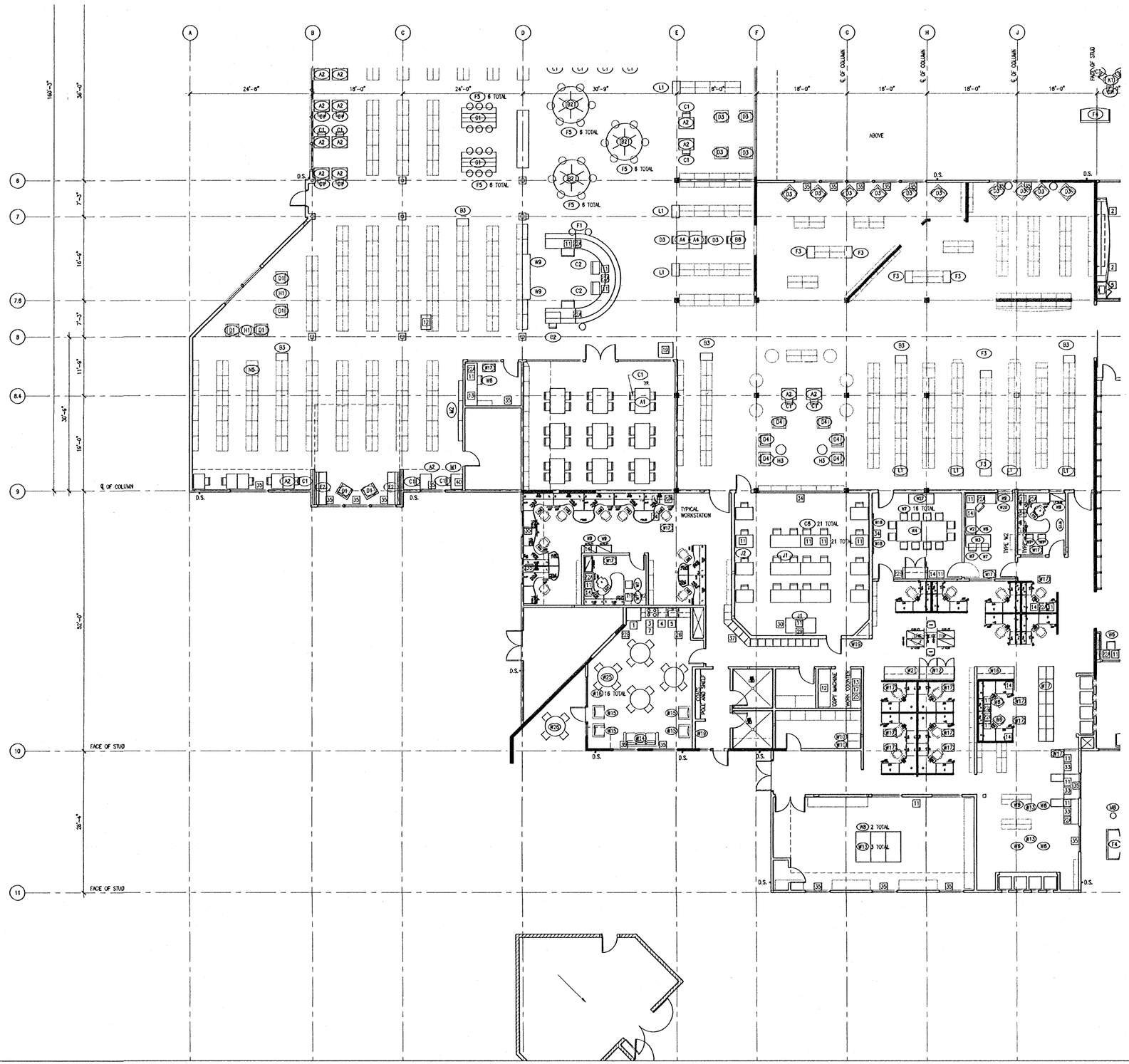

NOTES:

1. FOR INFORMATION AND LAYOUT ONLY. FURNISHINGS ARE NOT IN CONTRACT. (N.I.C.)
2. SEE FURNITURE SCHEDULES ON SHEET A10.2
3. SEE EQUIPMENT LIST ON SHEET A 10.2.
4. SEE SHELVING PLANS ON SHEETS FOR LAYOUT AND LOCATION OF LIBRARY AND DISPLAY SHELVING.

TRUE NORTH

PROJ. NORTH

FURNITURE PLAN - AREA B - NOT IN CONTRACT (N.I.C.)

furn-1

0 1 4 8 16 24 FEET

1
A11.1B

FIELD PAOLI

Architecture
1045 Sansome St.
Suite 206
San Francisco
California, 94111
Tel. 415. 788. 6606
Fax 415. 788. 6650

SARATOGA LIBRARY

SANTA CLARA COUNTY LIBRARY

13650 Saratoga Avenue
Saratoga, California 95070

LICENSED ARCHITECT
NO. C 13809
SEAL
STATE OF CALIFORNIA

DATE	JANUARY 25, 2002
	CONFORM SET RE-PLOT
REVISIONS	
	CONSTRUCTION DOCUMENTS
	BID SET
1	ADDENDUM NO. 4 12/27/01

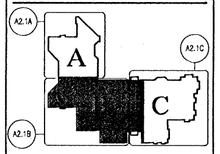

FURNITURE PLAN 1

SCALE	1/8" = 1'-0"
DRAWN BY	CM
CHECKED BY	MS
JOB NO.	0101

PHASE - 2

SHEET NO. **A11.1B**

All drawings and written material appearing herein constitute the original and unpublished work of the architect and the same may not be duplicated, used, or disclosed without the written consent of the architect ©Field Paoli

NOTES:

1. FOR INFORMATION AND LAYOUT ONLY. FURNISHINGS ARE NOT IN CONTRACT. (N.I.C.)
2. SEE FURNITURE SCHEDULES ON SHEET A10.2
3. SEE EQUIPMENT LIST ON SHEET A 10.2.
4. SEE SHELVING PLANS ON SHEETS FOR LAYOUT AND LOCATION OF LIBRARY AND DISPLAY SHELVING.

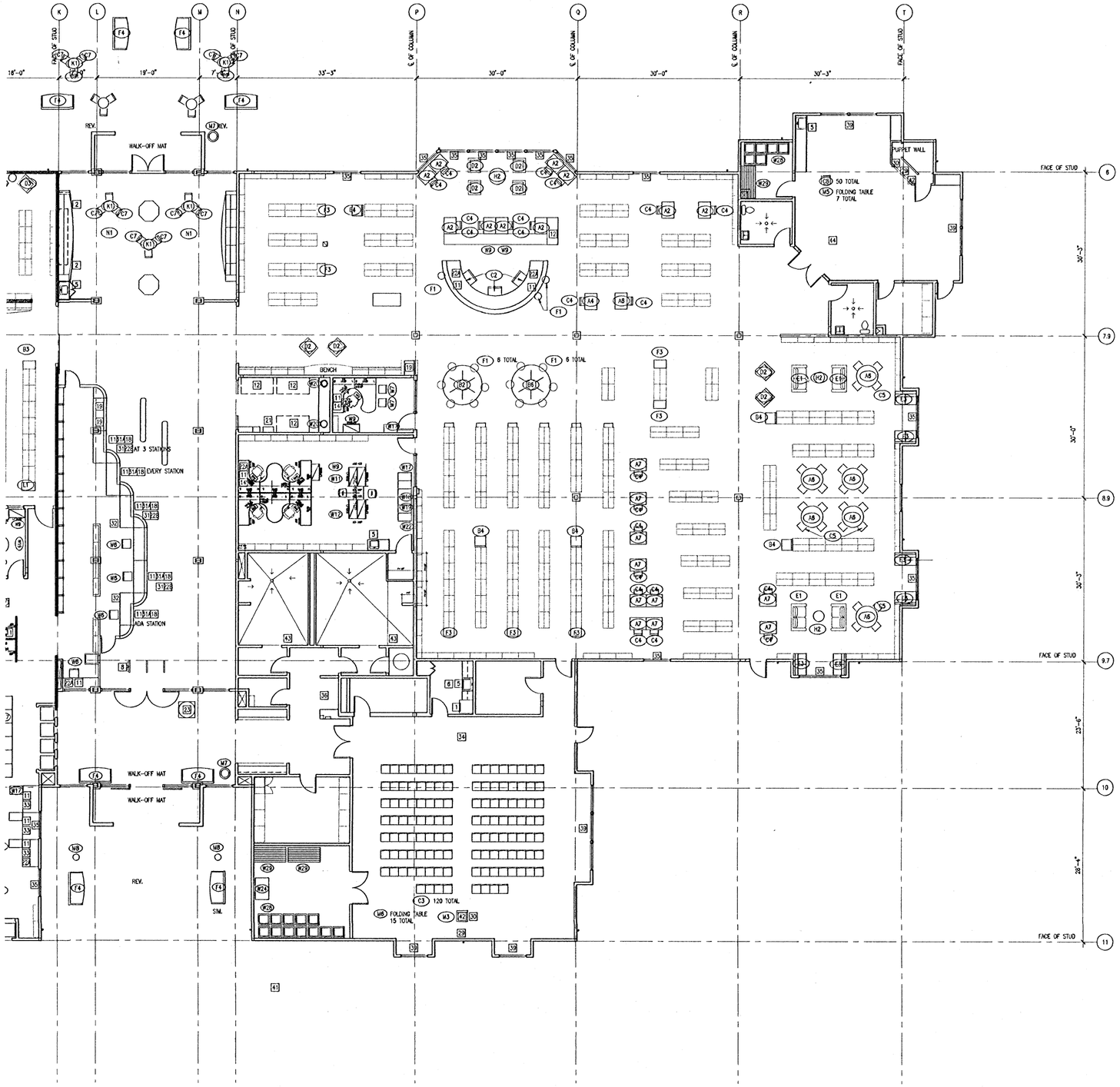

FURNITURE PLAN - AREA C - NOT IN CONTRACT (N.I.C.)

furn-1

TRUE NORTH

PROJ. NORTH

0 1 4 8 16 24 FEET

1
A11.1C

FIELD PAOLI

Architecture
1045 Sansome St.
Suite 206
San Francisco
California, 94111
Tel. 415. 788. 6606
Fax 415. 788. 6650

SARATOGA LIBRARY

SANTA CLARA COUNTY LIBRARY

13650 Saratoga Avenue
Saratoga, California 95070

LICENSED ARCHITECT
NO. C 19308
REN.
STATE OF CALIFORNIA

DATE	JANUARY 25, 2002
	CONFORM SET RE-PLOT
REVISIONS	
	CONSTRUCTION DOCUMENTS
	BID SET
1	ADDENDUM NO. 4 12/27/01

A2.1A A B A2.1C A2.1B

FURNITURE PLAN 1

SCALE	1/8" = 1'-0"
DRAWN BY	CM
CHECKED BY	MS
JOB NO.	0101

PHASE - 2

SHEET NO. **A11.1C**

All drawings and written material appearing herein constitute the original and unpublished work of the architect and the same may not be duplicated, used, or disclosed without the written consent of the architect ©Field Paoli

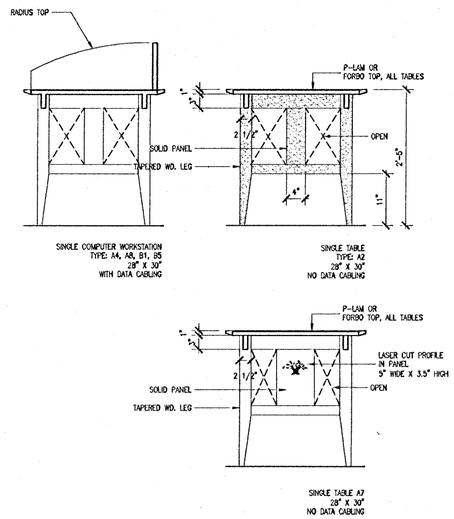

SINGLE TABLE A7

3
A10.3

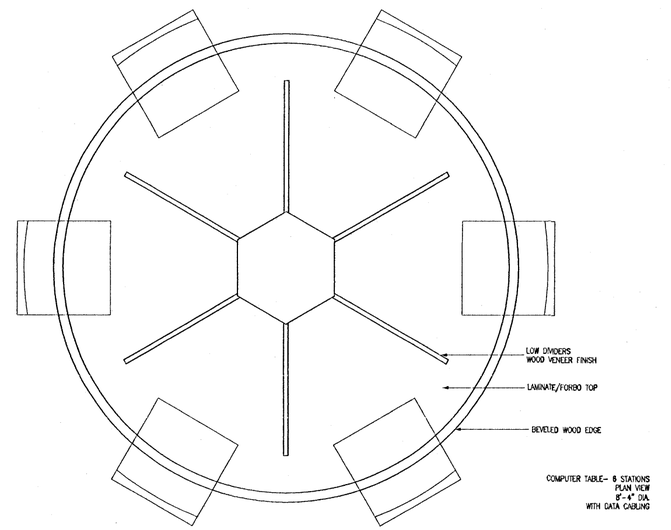

PLAN

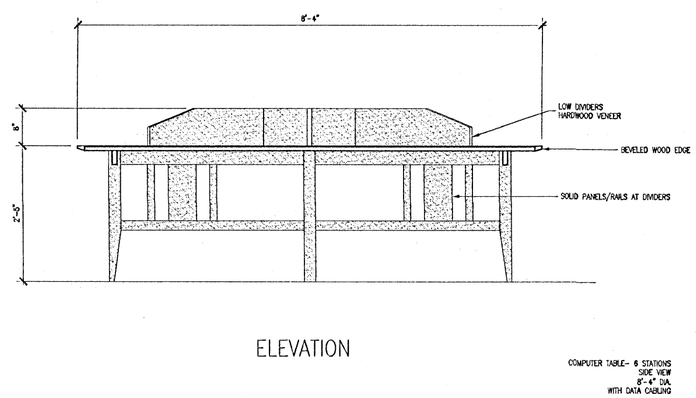

ELEVATION

COMPUTER TABLE

1
A10.3

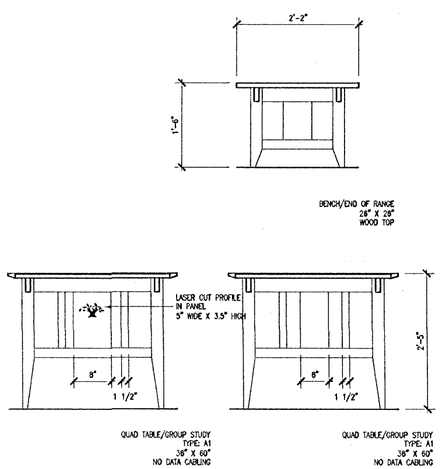

QUAD TABLE / GROUP STUDY

4
A10.3

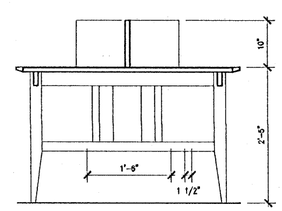

INDEX TABLE

2
A10.3

FIELD PAOLI

Architecture
1045 Sansome St.
Suite 206
San Francisco
California, 94111
Tel. 415. 788. 6606
Fax 415. 788. 6650

SARATOGA LIBRARY

SANTA CLARA COUNTY LIBRARY

13650 Saratoga Avenue
Saratoga, California 95070

REGISTERED ARCHITECT
NO. C 13808
REN.
STATE OF CALIFORNIA

DATE OCTOBER 28, 2001

REVISIONS

CONSTRUCTION DOCUMENTS
BID SET

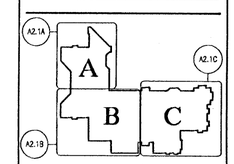

FURNITURE PROFILES
NOT IN CONTRACT (N.I.C.)
FOR INFORMATION ONLY

SCALE 1" = 1'-0"
DRAWN BY SL
CHECKED BY
JOB NO. 0101

PHASE - 2

SHEET NO. **A11.2**

All drawings and written material appearing herein constitute the original and unpublished work of the architect and the same may not be duplicated, used, or disclosed without the written consent of the architect © Field Paoli

GENERAL STRUCTURAL NOTES

I. GENERAL

A. SEE DRAWINGS OTHER THAN STRUCTURAL FOR: KINDS OF FLOOR FINISH AND THEIR LOCATION, FOR DEPRESSIONS IN FLOOR SLABS, FOR OPENINGS IN WALLS AND FLOORS REQUIRED BY ARCHITECTURAL AND MECHANICAL FEATURES, FOR ROADWAY PAVING, WALKS, RAMPS, STAIRS, CURBS, ETC.

B. HOLES AND OPENINGS THROUGH WALLS AND FLOORS FOR DUCTS, PIPING AND VENTILATIONS SHALL BE COORDINATED BY THE CONTRACTOR WHO SHALL VERIFY SIZES AND LOCATION OF SUCH HOLES OR OPENINGS WITH THE MECHANICAL, PLUMBING, AND ELECTRICAL DRAWINGS AND THESE SUB-CONTRACTORS.

C. NO PIPES OR DUCTS SHALL BE EMBEDDED IN SLABS OR MASONRY WALLS UNLESS SPECIFICALLY DETAILED OR APPROVED BY THE ARCHITECT.

D. DRAWINGS AND SPECIFICATIONS REPRESENT FINISHED STRUCTURE. CONTRACTOR SHALL BE RESPONSIBLE FOR MEANS AND METHODS OF CONSTRUCTION INCLUDING BUT NOT LIMITED TO SHORING AND TEMPORARY BRACING. THE CONTRACTOR SHALL TAKE ALL NECESSARY MEASURES TO INSURE SAFETY OF ALL PERSONS AND STRUCTURES AT THE SITE AND ADJACENT TO THE SITE. OBSERVATION VISITS TO THE SITE BY THE ARCHITECT, ENGINEER OR CONSTRUCTION MANAGER SHALL NOT RELIEVE THE CONTRACTOR OF SUCH RESPONSIBILITY.

E. CONTRACTOR SHALL VERIFY ALL DIMENSIONS AT JOB SITE BEFORE COMMENCING WORK AND SHALL REPORT ANY DISCREPANCIES TO THE ARCHITECT.

F. OMISSIONS OR CONFLICTS BETWEEN VARIOUS ELEMENTS OF THE DRAWINGS, NOTES, AND DETAILS SHALL BE BROUGHT TO THE ATTENTION OF THE ARCHITECT AND RESOLVED BEFORE PROCEEDING WITH THE WORK.

G. DO NOT USE SCALED DIMENSIONS; USE WRITTEN DIMENSIONS. WHERE NO DIMENSION IS PROVIDED, CONSULT THE ARCHITECT FOR CLARIFICATION BEFORE PROCEEDING WITH THE WORK.

H. IF CERTAIN FEATURES ARE NOT FULLY SHOWN OR CALLED FOR ON THE DRAWINGS OR SPECIFICATIONS, THEIR CONSTRUCTION SHALL BE OF THE SAME CHARACTER AS FOR SIMILAR CONDITIONS THAT ARE CALLED FOR OR SHOWN.

II. EXISTING CONSTRUCTION

A. WORK SHOWN IS NEW UNLESS NOTED AS EXISTING: (E)

B. EXISTING CONSTRUCTION SHOWN ON THESE DRAWINGS WAS OBTAINED FROM INCOMPLETE DESIGN DRAWINGS. THE CONTRACTOR SHALL VERIFY ALL EXISTING JOB CONDITIONS, REVIEW ALL DRAWINGS AND VERIFY DIMENSIONS PRIOR TO CONSTRUCTION. THE CONTRACTOR SHALL NOTIFY THE ARCHITECT OF ALL DISCREPANCIES AND EXCEPTIONS BEFORE PROCEEDING WITH THE WORK. THESE DRAWINGS ARE AVAILABLE FOR REVIEW.

C. THE REMOVAL, CUTTING, DRILLING, ETC. OF EXISTING WORK SHALL BE PERFORMED WITH GREAT CARE AND SMALL TOOLS IN ORDER NOT TO JEOPARDIZE THE STRUCTURAL INTEGRITY OF THE BUILDING. IF STRUCTURAL MEMBERS OR MECHANICAL, ELECTRICAL, OR ARCHITECTURAL FEATURES NOT INDICATED FOR REMOVAL INTERFERE WITH THE NEW WORK, THE ARCHITECT SHALL BE IMMEDIATELY NOTIFIED AND PRIOR APPROVAL SHALL BE OBTAINED BEFORE REMOVAL OF MEMBERS.

D. THE CONTRACTOR SHALL SAFELY SHORE EXISTING CONSTRUCTION WHEREVER EXISTING SUPPORTS ARE REMOVED TO ALLOW THE INSTALLATION OF THE NEW WORK. ALL SHORING METHODS AND SEQUENCING OF DEMOLITION SHALL BE SPECIFIED BY A CALIFORNIA LICENSED CIVIL ENGINEER TO BE RETAINED BY THE CONTRACTOR.

E. THE CONTRACTOR SHALL VERIFY THE LOCATION OF EXISTING UTILITIES BEFORE BEGINNING WORK. SPECIAL CARE SHALL BE TAKEN TO PROTECT UTILITIES THAT ARE TO REMAIN IN SERVICE DURING CONSTRUCTION.

F. THE CONTRACTOR SHALL PROMPTLY REPAIR DAMAGE CAUSED DURING OPERATIONS WITH SIMILAR MATERIALS AND WORKMANSHIP.

G. ALL REMOVED ITEMS, MATERIALS AND DEBRIS, UNLESS OTHERWISE NOTED, SHALL BECOME THE PROPERTY OF THE DEMOLITION CONTRACTOR AND SHALL BE REMOVED PROMPTLY FROM THE SITE AND DISPOSED OF IN A LEGAL MANNER.

III. DESIGN BASIS

A. APPLICABLE CODE: UNIFORM BUILDING CODE (UBC), 1997 EDITION.

B. VERTICAL LIVE LOADS:

1. OFFICES:
   50 PSF (PLUS 20 PSF DEAD LOAD FOR PARTITIONS).
2. EXITS AND CORRIDORS:
   100 PSF. (NON-REDUCIBLE).
3. ROOF: 20 PSF PLUS MECHANICAL.
4. BOOK STACKS: 125 PSF
5. READING ROOMS: 60 PSF

C. LATERAL LOADS:

1. DESIGN WIND SPEED = 70 MPH; EXPOSURE "B"; IMPORTANCE= 1.00
2. SEISMIC: STATIC FORCE PROCEDURE
   ZONE = 4, SOIL TYPE = S_D, R =5.5, Na = 1.3, Nv = 1.6, I = 1.00
   DESIGN BASE SHEAR, V = 0.20W (ASD)

D. FOUNDATION DESIGN CRITERIA

1. ALLOWABLE SOIL BEARING PRESSURES ARE:
   DEAD + LIVE LOADS 2500 PSF
   DEAD + LIVE + SEISMIC LOADS 3300 PSF
   FOOTINGS SHALL EXTEND A MINIMUM OF 24 INCHES BELOW LOWEST ADJACENT GRADE AND BEAR ON 12" LAYER OF ENGINEERED FILL, OR EXTEND 38" BELOW GRADE INTO FIRM ALLUVIAL SOIL.

IV. MATERIALS

A. CONCRETE

1. REINFORCING STEEL:

   a. BARS: ASTM A615, GRADE 60.
   b. WELDED BARS: ASTM A706, GRADE 60.
   c. WELDED WIRE FABRIC: ASTM 185.
   d. ALL CONCRETE SHALL BE REINFORCED UNLESS SPECIFICALLY MARKED 'NOT REINFORCED'.

2. CONCRETE CLASSES: SEE SPECIFICATIONS FOR REQUIREMENTS.

CLASS	USE	WT	STRENGTH
A	FOUNDATIONS, SLABS-ON-GRADE, CURBS	145 PCF	3000 PSI

3. MINIMUM CONCRETE COVER FOR REINFORCING STEEL:

a.	SURFACES PLACED AGAINST EARTH	3"
b.	FORMED SURFACES BELOW GRADE	2"
c.	SURFACES EXPOSED TO WEATHER	2"
d.	BEAM AND COLUMN BARS (INCLUDING STIRRUPS OR TIES)	1-1/2"
e.	EXTERIOR WALL AT EXTERIOR FACE	1-1/2"
f.	SLABS AND WALLS NOT EXPOSED TO WEATHER	1"

B. WOOD

1. FRAMING LUMBER - DOUGLAS FIR:

   a. JOISTS AND RAFTERS: NO. 1.
   b. POSTS, BEAMS, AND HEADERS: NO. 1, U.O.N.
   c. STUDS, PLATES, BLOCKS, LIGHT FRAMING AND MISC: NO. 2.
   d. ALL LUMBER IN CONTACT WITH CONCRETE OR MASONRY 6'-0" OR LESS ABOVE GROUND SHALL BE PRESSURE TREATED DOUGLAS FIR.
   e. LUMBER MOISTURE CONTENT: SEE SPECIFICATIONS

2. PLYWOOD SHEATHING:

   a. ROOF SHEATHING: 5/8 INCH C-D, EXPOSURE 1
      APA RATED 32/16 U.O.N.
   b. WALL SHEATHING: 1/2 INCH C-D, EXPOSURE 1.

3. PREFABRICATED WOOD I-JOISTS: BY TRUSS JOIST MACMILLAN, REPORT NO. PFC-4354 OR APPROVED EQUAL.

4. LAMINATED VENEER LUMBER (LVL): AS MANUFACTURED BY TRUSS JOIST MACMILLAN, REPORT NO. NER-12, OR APPROVED EQUAL. △1

5. PARALLEL STRAND LUMBER (PSL): AS MAUFACTURED BY TRUSSSS JOIST MACMILLAN, REPORT NO. ER-4979, OR APPROVED EQUAL. △1

6. GLUED-LAMINATED BEAMS:

   a. 24F V4 FOR SIMPLE SPANS AND 24F V8 FOR CANTILEVERED AND CONTINUOUS BEAMS.
   b. APPEARANCE: INDUSTRIAL GRADE TYP.; ARCHITECTURAL GRADE IF EXPOSED.
   c. CAMBER TO RADIUS OF 1600' U.N.O.
   d. ALASKAN YELLOW CEDAR WHERE NOTED ON PLAN & DETAILS.

7. FRAMING HARDWARE: AS MANUFACTURED BY SIMPSON CO. OR APPROVED EQUAL. SIMPSON DESIGNATIONS USED.

8. NAILS: COMMON WIRE GAGE U.N.O. NAILING TO CONFORM TO UBC TABLE 23-II-B-1, U.N.O.

   a. USE OF MACHINE NAILING IS SUBJECT TO A SATISFACTORY JOBSITE DEMONSTRATION FOR EACH PROJECT AND THE APPROVAL OF THE PROJECT ARCHITECT OR STRUCTURAL ENGINEER. THE APPROVAL IS SUBJECT TO CONTINUED SATISFACTORY PERFORMANCE. IF THE NAIL HEADS PENETRATE THE OUTER PLY MORE THAN WOULD BE NORMAL FOR A HAND-HELD HAMMER, OR IF MINIMUM ALLOWABLE EDGE DISTANCES ARE NOT MAINTAINED, THE PERFORMANCE WILL BE DEEMED UNSATISFACTORY AND MACHINE NAILING SHALL BE DISCONTINUED.

9. BOLTS: ASTM A307. BOLT HOLES TO BE 1/16" OVER SIZE U.N.O.

10. PROVIDE LATERAL SUPPORT FOR BEAMS, JOISTS AND RAFTERS.

C. STEEL

1. SHAPES AND PLATES: DUAL GRADE (A36-A572/50) OR ASTM A572 GRADE 50; TUBES: ASTM A500, GRADE B; PIPES: ASTM A53, GRADE B.

2. BOLTS: ASTM A307.

3. WELDING ELECTRODES: E-70. WELDS NOTED "CVN" SHALL USE ELECTRODES WITH CHARPY V-NOTCH VALUES OF 20FT-LBS AT ZERO DEGREES F OR BETTER.

4. ANCHOR BOLTS: ASTM A307.

5. WELDED STUDS: FLUX FILLED HEADED ANCHOR STUDS TYPE H4L OR S3L BY NELSON OR APPROVED EQUAL. △1

6. ALL STEEL PERMANENTLY EXPOSED TO THE EXTERIOR SHALL BE HOT DIPPED GALVANIZED.

V. QUALITY CONTROL

A. THE FOLLOWING WORK REQUIRES TESTS AND/OR INSPECTIONS. FOR SPECIFIC REQUIREMENTS SEE SPECIFICATIONS. INSPECTIONS SHALL BE MADE IN ACCORDANCE WITH UBC 1701 BY A CERTIFIED SPECIAL INSPECTOR RETAINED BY THE OWNER.

1. FOOTING EXCAVATION
2. SOIL COMPACTION
3. REINFORCING STEEL & ANCHOR BOLTS
4. CONCRETE
5. EXPANSION BOLTS
6. GROUTED DOWELS
7. WELDING: REBAR, STRUCTURAL STEEL, WELDED STUDS
8. PLYWOOD SHEAR NAILING AND FRAMING HARDWARE

B. A PARTIAL LISTING OF REQUIRED STRUCTURAL SUBMITTALS FOLLOWS. CONSULT THE SPECIFICATIONS FOR A COMPLETE LISTING OF SUBMITTAL REQUIREMENTS.

1. CONCRETE MIX DESIGNS
2. CONSTRUCTION JOINT LAYOUT & CONTROL JOINT LAYOUT
3. REINFORCING STEEL SHOP DRAWINGS
4. STRUCTURAL STEEL SHOP DRAWINGS
5. PREFABRICATED I-JOIST SHOP DRAWINGS & CALCULATIONS
6. GLULAM BEAM SHOP DRAWINGS
7. MANUFACTURER'S DATA FOR INSERTS, GROUTS & EPOXIES
8. PLYWOOD NAILS AND NAILING MACHINE DATA
9. WELDING ELECTRODE DATA AND WELDING PROCEDURE SPECIFICATIONS

C. STRUCTURAL OBSERVATION SHALL BE PROVIDED BY THE STRUCTURAL ENGINEER OF RECORD (DASSE DESIGN, INC. AT 33 NEW MONTGOMERY ST., SUITE 850, SAN FRANCISCO, CA 94105, PHONE #: (415) 243-8400, IN ACCORDANCE WITH U.B.C. 1702.

1. SITE VISITS WILL BE PERFORMED AT THE FOLLOWING STAGES OF CONSTRUCTION
   a. PRIOR TO FIRST FOUNDATION CONCRETE POUR.
   b. PRIOR TO CONCRETE SLAB-ON-GRADE POUR.
   c. AFTER ERECTION OF FIRST STORY STUD WALLS, PRIOR TO ROOF SHEATHING INSTALLATION.
   d. AFTER NAILING OF ROOF AND WALL PLYWOOD, PRIOR TO COVERING WITH FINISHES.
2. CONTRACTOR SHALL NOTIFY ARCHITECT AND STRUCTURAL ENGINEER AT LEAST 48 HOURS PRIOR TO THE TIME REQUIRED FOR THESE STRUCTURAL OBSERVATIONS.
3. COPIES OF THE ENGINEER'S SITE REPORTS SHALL BE DISTRIBUTED TO THE ARCHITECT, CITY BUILDING OFFICIAL AND CONTRACTOR.

VI. ABBREVIATIONS

#	DIAMETER	MECH.	MECHANICAL
&	AND	MFR	MANUFACTURER
@	AT	MTL.	METAL
A.B.	ANCHOR BOLT	MIN.	MINIMUM
ARCH.	ARCHITECTURAL	MISC.	MISCELLANEOUS
BLDG.	BUILDING	N.I.C.	NOT IN CONTRACT
BLKG.	BLOCKING	NOM.	NOMINAL
BM.	BEAM	NTS.	NOT TO SCALE
BOT.	BOTTOM	O.C.	ON CENTER
C.B.	COLUMN BASE	O.D. (I.D.)	OUTSIDE (INSIDE) DIAMETER
C.L.	CENTER LINE	OPG.	OPENING
C.J.	CONSTRUCTION JOINT	OPP.	OPPOSITE
CLR.	CLEAR	P.A.	PURLIN ANCHOR
CMU.	CONCRETE MASONRY UNIT	P.A.F.	POWER ACTUATED FASTENER
COL.	COLUMN	PL	PLATE
CONN.	CONNECTION	P.P.	PARTIAL PENETRATION
CONT.	CONTINUOUS	PLY.	PLYWOOD
C.P. (P.P.)	COMPLETE PENETRATION	PSL	PARALLEL STRAND LUMBER
CTR.	CENTER	PT.	POINT
CTRSK	COUNTERSINK	PTN.	PARTITION
CVN	NOTCH TOUGH WELD WIRE	REF.	REFERENCE
DET.	DETAIL	REINF.	REINFORCEMENT
D.F.	DOUGLAS FIR	REQ.	REQUIRED
DWG.	DRAWING	RWD.	REDWOOD
(E)	EXISTING	S.A.D.	SEE ARCHITECTURAL DRAWINGS
EA.	EACH	SCHED.	SCHEDULE
E.F.	EACH FACE	SECT.	SECTION
EL. OR ELEV.	ELEVATION	SHT.	SHEET
ELECT.	ELECTRICAL	SIM.	SIMILAR
E.N.	END (OR EDGE) NAILING	S.O.G.	SLAB-ON-GRADE
E.W.	EACH WAY	SPA	SPACE
EXT.	EXTERIOR	SPEC.	SPECIFICATION
FDN.	FOUNDATION	SQ.	SQUARE
FIN.	FINISH	ST.	STRAP TIE
FL. OR FLR	FLOOR	STAGG.	STAGGERED
F.O.C.	FACE OF CONCRETE	STD.	STANDARD
F.O.S.	FACE OF STUD	STL.	STEEL
FRMG	FRAMING	STRUCT.	STRUCTURAL
FTG.	FOOTING	SYM.	SYMMETRICAL
GA.	GAUGE	T&B	TOP AND BOTTOM
GALV.	GALVANIZED	T&G	TONGUE AND GROOVE
GLB.	GLU-LAMINATED BEAM	THD.	THREADED
H.D.	HOLD DOWN	T.D.	TIE DOWN
HORIZ.	HORIZONTAL	T.O.C.	TOP OF CONCRETE
HSS	HOLLOW STRUCTURAL (TUBE) STEEL	T.O.S.	TOP OF STEEL
HT.	HEIGHT	T.W.	TOP OF WALL
INT.	INTERIOR	T.P.	TOP OF PLATE
J.H.	JOIST HANGER	TJI	WOOD I-JOISTS
JT.	JOINT	TYP.	TYPICAL
LLH (LLV)	LONG LEG HORIZONTAL (OR VERTICAL)	U.O.N.	UNLESS OTHERWISE NOTED
LT.	LIGHT	VERT.	VERTICAL
LT. WT.	LIGHT WEIGHT	W/	WITH
LVL	LAMINATED VENEER LUMBER	W/O	WITHOUT
M.B.	UNFINISHED MACHINE BOLTS	W.P.	WORK POINT
MAX.	MAXIMUM	WT.	WEIGHT

VII. INDEX OF STRUCTURAL DRAWINGS

PHASE 1 DRAWINGS:

SHEET NO.	TITLE
1-S1.0	GENERAL NOTES
1-S2.1A	PARTIAL FOUNDATION PLAN
1-S2.1B	PARTIAL FOUNDATION PLAN
1-S2.1C	PARTIAL FOUNDATION PLAN
1-S3.1	FRAME ELEVATIONS
1-S5.1	TYPICAL CONCRETE DETAILS
1-S5.2	TYPICAL FOUNDATION DETAILS
1-S7.1	TYPICAL STEEL DETAILS
1-S8.1	TYPICAL WOOD DETAILS

PHASE 2 DRAWINGS:

SHEET NO.	TITLE
S1.0	GENERAL NOTES
S2.1A	PARTIAL FOUNDATION PLAN
S2.1B	PARTIAL FOUNDATION PLAN
S2.1C	PARTIAL FOUNDATION PLAN
S2.2A	PARTIAL ROOF FRAMING PLAN
S2.2B	PARTIAL ROOF FRAMING PLAN
S2.2C	PARTIAL ROOF FRAMING PLAN
S3.1	FRAME ELEVATIONS
S5.1	TYPICAL CONCRETE DETAILS
S5.2	TYPICAL FOUNDATION DETAILS
S7.1	TYPICAL STEEL DETAILS
S7.2	STEEL DETAILS
S8.1	TYPICAL WOOD DETAILS
S8.2	WOOD I-JOIST DETAILS
S8.3	WOOD DETAILS
S8.4	WOOD DETAILS
S8.5	WOOD DETAILS
S8.6	WOOD DETAILS

Whenever designated items on this list are ready for sampling, testing, or inspection, it shall be the responsibility of the Contractor to give timely notice to the Inspection Agency, the Engineer-of-Record, or the Soils Engineer so that the required services may be performed. See project specifications sections for complete testing and inspection information.

REINFORCING STEEL:	
x	Shop Identification
	Tensile & Bend, one set per heat per _____ tons
x	Inspection of Placement
	Inspection of Welding
MASONRY:	f'm = 1500 PSI
	GROUT f'g = 2000 PSI;
	MORTAR (STUDS 21 – 18) 1500 PSI)
	Preliminary Acceptance Tests (Masonry Units/Wall Prisms)
	Subsequent Tests (Mortar Grout/or Field Wall Prisms)
	Inspection of Grouting
	Inspection of Placement
CONCRETE, GUNITE, GROUT, AND MORTAR:	
Concrete:	f'c = 3000 PSI Typ. U.N.O.
	f'c = PSI For
	f'c = PSI For

Conc.	Gun.	Grout	Mortar	
				Agg. Tests for Designs
				Suitability of Agg.
x		x		Mix Designs
				Test Panel
				Batch Plant Insp.
				Cement Grab Sample
x		x		Inspect Placing
x		x		Compression Tests
x		x		Cast Specimens
				Pick-Up Samples
				Shrinkage Bars
				Yield Check
				Air Check
				Dry Well Weight

PRECAST CONCRETE:	
	Reinforcing Tests
	Inspection of Reinforcing
	Tendon Tests
	Inspection of Tendon Placement
	Inspection of Concrete Placement
	Inspection of Concrete Batching
	Inspection of Panel Attach. & Inserts
	Inspection of Panel Installation
	Compression Tests
	Inspection of Stressing/Transfer
PILING, CAISSONS, CAPS, TIES:	
	Inspection of Reinforcing Placement
	Inspection of Concrete Placement
	Inspection of Drilling and Driving Operations
ANCHOR BOLTS AND DOWELS:	
x	Installation of Anchor Bolts
x	Installation of Dowels
x	Installation and Pull-Out Test of Mech. Bolts or Epoxy Bolts

STRUCTURAL STEEL:	
	Sample & Test (list specific members below)
x	Shop Ident. & Welding Inspection
	Shop Ultrasonic Inspection
	Shop Radiology
x	Field Welding Inspection
x	Field Bolting Inspection
	Field Ultrasonic Inspection
	Field Radiology
	Metal Deck Welding Inspection
x	Welded Stud Shear Connector Inspection
ASPHALTIC CONCRETE:	
	Mix Designs
	Inspection of Batch Plant
	Core/Test
	Field Inspection
	Suitability Tests
	Specific Gravity
	Asphalt Content
	Sieve Analysis
	K Factors
	Stabilometer Value
	Swell
INSULATING CONCRETE:	
	Sample & Test
	Unit Weights
	Inspection of Placement
FIREPROOFING:	
	Inspection of Placement
	Density Tests
	Thickness Tests
	Inspect Batching
STRUCTURAL WOOD:	
x	Inspection of Shear Wall & Diaphragm Nailing
	Inspection of Truss Fab.
	Sample & Test Components
x	Inspection of Glu-Lam Installation
x	Certificate of Glu-Lam Beams by AITC
x	Inspection of Framing Connectors
FILL MATERIAL:	
	Acceptance Tests
	Moisture-Density Determination
	Field Density
EARTHWORK:	
x	Grading
x	Foundation Excavations
OTHER TESTS, INSPECTIONS, OR SPECIAL INSTRUCTIONS	
STRUCTURAL OBSERVATIONS	
x	Per UBC 1702

1 TESTS AND INSPECTIONS SCHEDULE

NO SCALE

TYPICAL FOOTING SUBGRADE PREPARATION

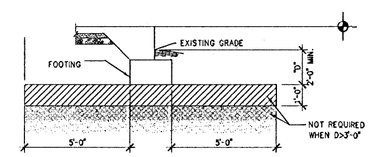

TYPICAL SLAB SUBGRADE PREPARATION

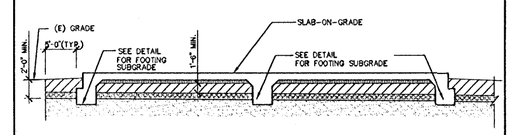

LEGEND

- UNDISTURBED NATIVE SOIL.
- SCARIFY 8 INCHES, MOISTURE CONDITION AND COMPACT TO MINIMUM 90% OF ASTM D1557 LABORATORY MAXIMUM DENSITY.
- COMPACT ENGINEERED FILL MATERAL TO A MINIMUM OF 90% OF THE ASTM D1557-9 LABORATORY MAXIMUM DENSITY. RECONDITION ON-SITE SOIL PER SOILS REPORT.
- 2" SAND OVER VAPOR BARRIER OVER 4" CRUSHED AGGREGATE
- CONCRETE SLAB-ON-GRADE AND FOUNDATION

NOTES:

1. THIS DETAIL PRESENTS THE MINIMUM REQUIREMENTS FOR ENGINEERED FILL BELOW SLAB-ON-GRADE. GEOTECHNICAL ENGINEER MAY RECOMMEND ADDITIONAL EXCAVATION DURING CONSTRUCTION.
2. VERTICAL SIDEWALLS ARE SHOWN FOR ILLUSTRATION PURPOSES ONLY, SLOPED SIDEWALLS MAY BE REQUIRED.
3. REFER TO GEOTECHNICAL INVESTIGATION AND SPECIFICATIONS FOR SPECIFIC REQUIREMENTS.
4. THE EXCAVATED SOIL MAY BE REPLACED AS COMPACTED FILL WITH THE APPROVAL OF THE GEOTECHNICAL ENGINEER.
5. SEE GEOTECHNICAL REPORT, PER GENERAL NOTES
6. EXTENSION OF THE ENGINEERED FILL BEYOND THE EDGE IS NOT REQUIRED WHEN EXISTING FOOTING OR SLAB ON GRADE PREVENTS IT.

2 TYPICAL FOUNDATION AND SLAB SUBGRADE PREPARATION

NO SCALE

FIELD PAOLI

Architecture
1045 Sansome St.
Suite 206
San Francisco
California, 94111
Tel. 415. 788. 6606
Fax 415. 788. 6650

SARATOGA LIBRARY

SANTA CLARA COUNTY LIBRARY

13650 Saratoga Avenue
Saratoga, California 95070

DASSE DESIGN INC.
STRUCTURAL ENGINEERS
33 New Montgomery St., Suite 850
San Francisco, CA 94105
415/243-8400 • 415/243-8188

REGISTERED PROFESSIONAL ENGINEER WILLIAM A ANDREWS S 3773 Exp. 3-31-02 STRUCTURAL STATE OF CALIFORNIA

DATE	JANUARY 25, 2002
REVISIONS	
	CONSTRUCTION DOCUMENTS
	BID SET 10/26/01
	△1 ADDENDUM 1 11/20/01
	CONFORM SET RE-PLOT

KEYPLAN

GENERAL NOTES

SCALE	
DRAWN BY	SRB
CHECKED BY	SRB
JOB NO.	008222

PHASE - 2

SHEET NO. S1.0

All drawings and written material appearing herein constitute the original and unpublished work of the architect and the same may not be duplicated, used, or disclosed without the written consent of the architect ©Field Paoli

FILE: E:\008222\STRUCT\Phase_2\S8222S2-1.dwg01/25/02 at 11:03
XREF: E:\008222\STRUCT\Phase_2\S8222TB.dwg

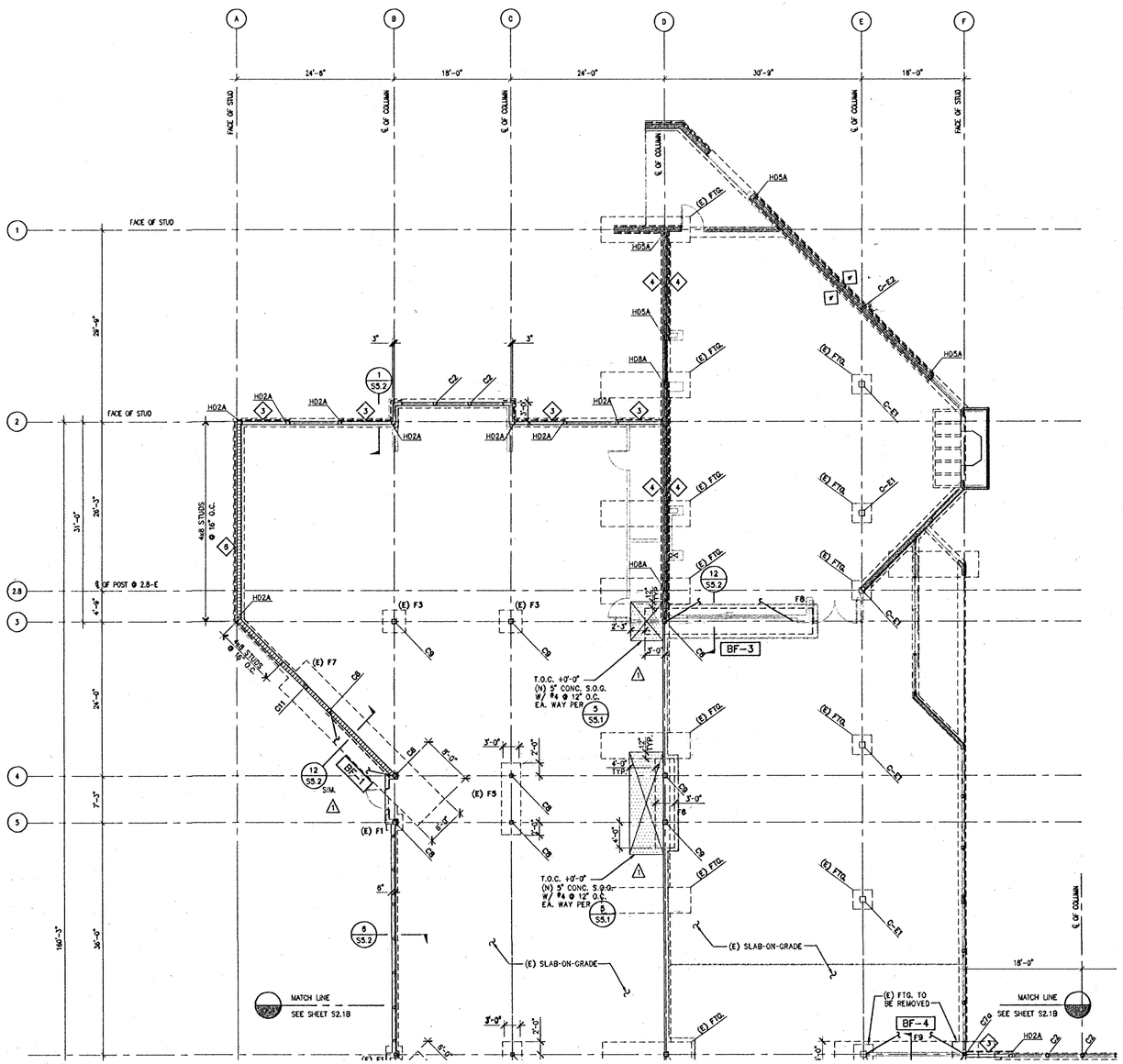

FOUNDATION NOTES

1. SEE GENERAL NOTES ON SHEET S1.0.
2. SEE TYPICAL CONCRETE DETAILS ON SHEET S5.1.
3. SEE BASE PLATE DETAILS ON SHEET S7.1.
4. FOUNDATION PLAN IS TAKEN ABOVE SLAB-ON-GRADE. NOMINAL TOP OF SLAB ELEVATION IS CALLED OUT IN PLAN. RELATIVE SLAB ELEVATIONS WITH RESPECT TO SLAB REFERENCE ELEVATION ARE SHOWN THUS: T.O.C. (-0'-2").
5. ELEVATIONS OF BOTTOM OF FOOTINGS WITH RESPECT TO SLAB REFERENCE ELEVATIONS ARE SHOWN THUS: ⌵2'-8", ETC.
6. SEE GENERAL NOTES ON S1.0 FOR FOOTING DESIGN CRITERIA.
7. EXCAVATIONS SHALL BE MADE AS NEAR AS POSSIBLE TO THE NEAT LINES REQUIRED BY THE SIZE AND SHAPE OF THE STRUCTURE. NO MATERIAL IS TO BE EXCAVATED UNNECESSARILY.
8. ALL FOUNDATION EXCAVATIONS MUST BE REVIEWED AND APPROVED BY THE SOILS ENGINEER PRIOR TO PLACEMENT OF CONCRETE, AND SUBMIT WRITTEN REPORT TO CITY OF SARATOGA PRIOR TO CITY INSPECTION. PROJECT STRUCTURAL ENGINEER SHALL PROVIDE STRUCTURAL OBSERVATION OF ALL FOUNDATIONS/FOOTINGS/PIER REINFORCEMENT AND SUBMIT WRITTEN INSPECTION REPORT TO CITY OF SARATOGA BUILDING OFFICIAL PRIOR TO CITY INSPECTION.
9. VERIFY LOCATION OF UNDERGROUND UTILITIES BEFORE EXCAVATION. NOTIFY ARCHITECT PRIOR TO EXCAVATION IN THE EVENT SUCH UTILITIES ARE ENCOUNTERED.
10. FOR DRAINAGE DETAILS, SUMPS, PITS, DAMP PROOFING, TRENCHES, CURBS, EXTERIOR WALKS, UTILITIES, EQUIPMENT DETAILS, STEPS, ETC., SEE DRAWINGS OTHER THAN STRUCTURAL.
11. EXTERIOR WALLS SHALL HAVE 1/2" PLYWOOD SHEATHING ON EXTERIOR FACE OF STUDS UNLESS OTHERWISE NOTED. SEE SCHEDULE ON SHEET S8.1 FOR MINIMUM NAILING.
12. MARKS "4" INDICATE PLYWOOD SHEAR WALLS WITH SHEATHING ON SIDE(S) OF WALL NOTED. SEE SHEAR WALL SCHEDULE ON SHEET S8.1.
13. SLAB CONSTRUCTION AND CONTROL JOINT LOCATIONS SHALL BE APPROVED BY THE ARCHITECT PRIOR TO PLACING ANY CONCRETE. S.A.D. FOR EXACT LOCATIONS OF CONTROL JOINTS AND SEE DETAIL 6/S5.1.
14. SILL BOLTS ARE REQUIRED AT ALL STUD WALLS SHOWN ON STRUCTURAL PLANS. SEE DETAILS 3, 5 AND 6 ON SHEET S8.1. FOR ANCHOR BOLT SIZE AND SPACING, SEE DETAIL 5/S8.1.
15. HOLDOWNS ARE DENOTED THUS ON PLAN: HD5A. SEE DETAILS 4 AND 8 ON SHEET S8.1. ALL HOLDOWNS REQUIRE 4x OR 6x POST PER DETAIL 4/S8.1.
16. FOR LOCATIONS AND DETAILS OF NON-LOAD BEARING PARTITIONS, SEE ARCH DWGS.
17. FOR TYPICAL WOOD DETAILS SEE SHEET S8.1.
18. MARK BF-1 INDICATES A BRACED FRAME. SEE SHEET S3.1 FOR FRAME ELEVATION.
19. FOR SLAB-ON-GRADE DETAIL AT WALKER UNDER FLOOR DUCT SYSTEM, SEE DETAIL 15/S5.1.
20. FOR EDGE OF SLAB, SEE DETAIL 1/S5.2.
21. PROVIDE NAILERS @ ALL HSS COLUMNS PER DETAIL 19/S8.1.
22. SEE DETAIL 20/S8.3 FOR SKEWED SHEAR WALL INTERSECTIONS.

EXISTING FRAMING NOTES

E1. SEE GENERAL NOTES ON SHEET S1.0.

E2. SEE EXISTING CONSTRUCTION DOCUMENTS FOR COMPLETE INFORMATION

E3. FOR (N) PLY. OVER (E) WALL FRAMING, PROVIDE NAILING & STUDS PER DETAILS ON S8.1

E4. FOR NEW HOLDOWN IN EXISTING FOUNDATION, SEE 8/S8.1.

STRUCTURAL WALL LEGEND

- 2x6 & 3x6 STUDS
- EXISTING STUD WALL TO REMAIN OR BE REPLACED
- 2x8 & 3x8 STUDS
- 4x8 STUDS WHERE NOTED ON PLAN

MARK	COLUMN SIZE	BASE ℄ txBxG	ANCHORS BOLTS (A307 U.O.N.)	BASE ℄ DETAIL
C-E1	(E) GLB 10¾ x 10½	-	-	-
C-E2	(E) 5"ø- XX PIPE	-	-	-
C2	4x6	SEE DETAIL	SEE DETAIL	20c/S8.1
C3	6x8	SEE DETAIL	SEE DETAIL	20c/S8.1
C4	W10x26	℄ tx1'-0"x1'-4"	4-¾"ø	20/S7.1
C5	8x8	SEE DETAIL	SEE DETAIL	20c/S8.1
C6	HSS 7x7x5/8	SEE DETAIL	SEE DETAIL	3/S7.1
C7	HSS 5x5x1/4	℄ 3/4"x0'-11"x0'-11"	4-¾"ø	20/S7.1
C7a	HSS 5x5x3/8	℄ 3/4"x0'-11"x0'-11"	4-¾"ø	20/S7.1
C8	HSS 6x6x1/4	℄ 3/4"x1'-0"x1'-0"	4-¾"ø	20/S7.1
C9	HSS 8x8x1/4	℄ 1"x1'-2"x1'-2"	4-¾"ø	20/S7.1
C10	GLB 10¾ x 10½	SEE DETAIL	SEE DETAIL	20/S5.2
C11	4x8	SEE DETAIL	SEE DETAIL	20c/S8.1

1/— COLUMN SCHEDULE

TRUE NORTH
PROJ. NORTH

FIELD PAOLI

Architecture
1045 Sansome St.
Suite 206
San Francisco
California, 94111
Tel. 415. 788. 6606
Fax 415. 788. 6650

SARATOGA LIBRARY

SANTA CLARA COUNTY LIBRARY

13650 Saratoga Avenue
Saratoga, California 95070

DASSE DESIGN INC.
STRUCTURAL ENGINEERS
33 New Montgomery St., Suite 800
San Francisco CA 94105
415/243-8400 – Fax 415/243-9169

REGISTERED PROFESSIONAL ENGINEER
WILLIAM A. ANDREWS
S 3773
Exp. 3-31-02
STRUCTURAL
STATE OF CALIFORNIA

DATE	JANUARY 25, 2002
REVISIONS	
	CONSTRUCTION DOCUMENTS
	BID SET 10/26/01
	⚠1 ADDENDUM 1 11/20/01
	CONFORM SET RE-PLOT

KEYPLAN

PARTIAL FOUNDATION PLAN

SCALE	1/8" = 1'-0"
DRAWN BY	SRB
CHECKED BY	SRB
JOB NO.	008222

PHASE - 2

SHEET NO. **S2.1A**

All drawings and written material appearing herein constitute the original and unpublished work of the architect and the same may not be duplicated, used, or disclosed without the written consent of the architect ©Field Paoli

XREF: E:\008222\STRUCT\Phase_2\008222S2-2L.dwg
XREF: E:\008222\STRUCT\008222 TB.dwg
XREF: E:\008222\ARCH\gbr1.dwg

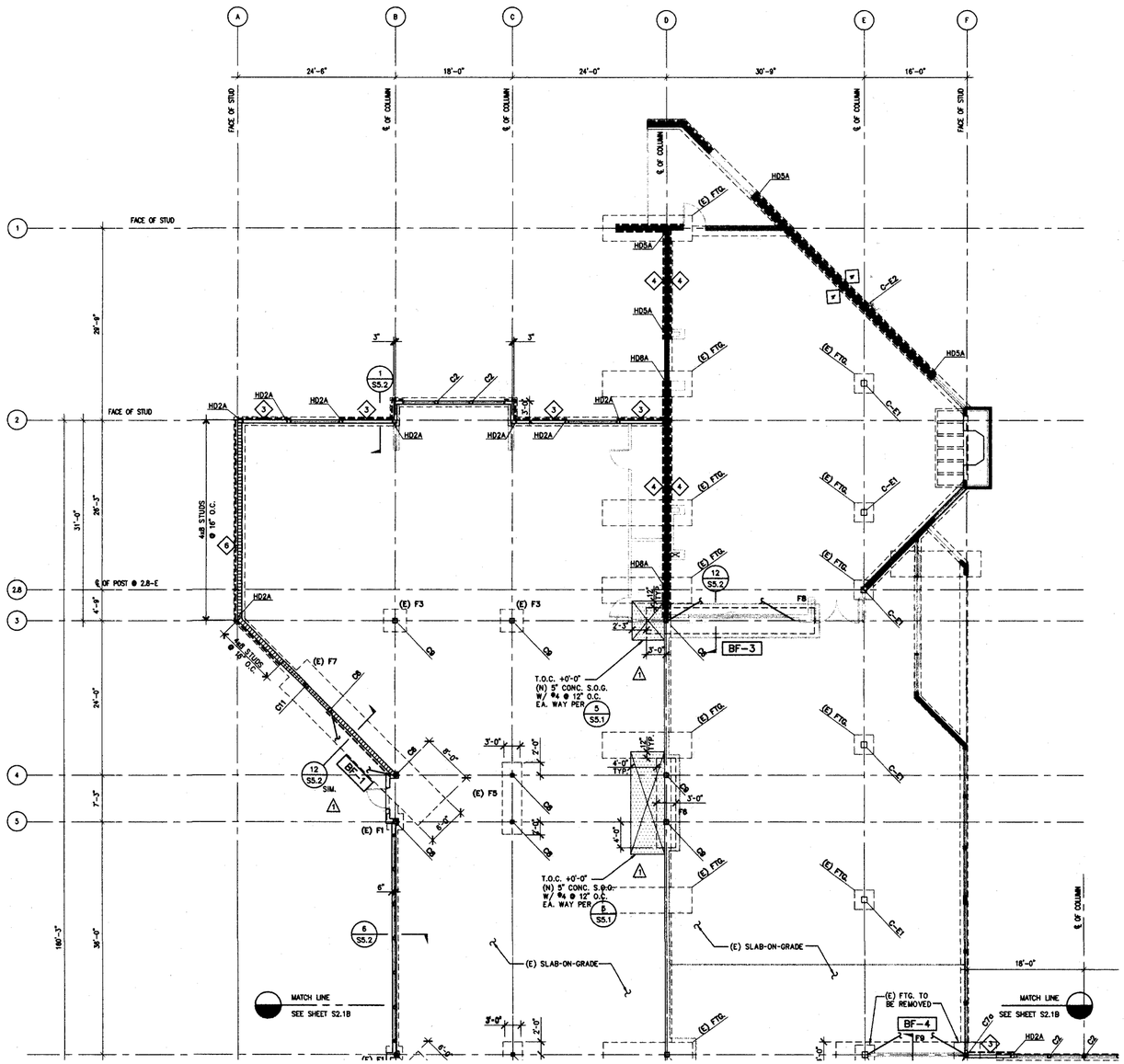

FOUNDATION NOTES

1. SEE GENERAL NOTES ON SHEET S1.0.
2. SEE TYPICAL CONCRETE DETAILS ON SHEET S5.1.
3. SEE BASE PLATE DETAILS ON SHEET S7.1.
4. FOUNDATION PLAN IS TAKEN ABOVE SLAB-ON-GRADE. NOMINAL TOP OF SLAB ELEVATION IS CALLED OUT IN PLAN. RELATIVE SLAB ELEVATIONS WITH RESPECT TO SLAB REFERENCE ELEVATION ARE SHOWN THUS: T.O.C. (-0'-2").
5. ELEVATIONS OF BOTTOM OF FOOTINGS WITH RESPECT TO SLAB REFERENCE ELEVATIONS ARE SHOWN THUS: 2'-8", ETC.
6. SEE GENERAL NOTES ON S1.0 FOR FOOTING DESIGN CRITERIA.
7. EXCAVATIONS SHALL BE MADE AS NEAR AS POSSIBLE TO THE NEAT LINES REQUIRED BY THE SIZE AND SHAPE OF THE STRUCTURE. NO MATERIAL IS TO BE EXCAVATED UNNECESSARILY.
8. ALL FOUNDATION EXCAVATIONS MUST BE REVIEWED AND APPROVED BY THE SOILS ENGINEER PRIOR TO PLACEMENT OF CONCRETE, AND SUBMIT WRITTEN REPORT TO CITY OF SARATOGA PRIOR TO CITY INSPECTION. PROJECT STRUCTURAL ENGINEER SHALL PROVIDE STRUCTURAL OBSERVATION OF ALL FOUNDATIONS/FOOTINGS/PIER REINFORCEMENT AND SUBMIT WRITTEN INSPECTION REPORT TO CITY OF SARATOGA BUILDING OFFICIAL PRIOR TO CITY INSPECTION.
9. VERIFY LOCATION OF UNDERGROUND UTILITIES BEFORE EXCAVATION. NOTIFY ARCHITECT PRIOR TO EXCAVATION IN THE EVENT SUCH UTILITIES ARE ENCOUNTERED.
10. FOR DRAINAGE DETAILS, SUMPS, PITS, DAMP PROOFING, TRENCHES, CURBS, EXTERIOR WALKS, UTILITIES, EQUIPMENT DETAILS, STEPS, ETC., SEE DRAWINGS OTHER THAN STRUCTURAL.
11. EXTERIOR WALLS SHALL HAVE 1/2" PLYWOOD SHEATHING ON EXTERIOR FACE OF STUDS UNLESS OTHERWISE NOTED. SEE SCHEDULE ON SHEET S8.1 FOR MINIMUM NAILING.
12. MARKS "4" INDICATE PLYWOOD SHEAR WALLS WITH SHEATHING ON SIDE(S) OF WALL NOTED. SEE SHEAR WALL SCHEDULE ON SHEET S8.1.
13. SLAB CONSTRUCTION AND CONTROL JOINT LOCATIONS SHALL BE APPROVED BY THE ARCHITECT PRIOR TO PLACING ANY CONCRETE. S.A.D. FOR EXACT LOCATIONS OF CONTROL JOINTS AND SEE DETAIL 6/S5.1.
14. SILL BOLTS ARE REQUIRED AT ALL STUD WALLS SHOWN ON STRUCTURAL PLANS. SEE DETAILS 3, 5 AND 6 ON SHEET S8.1. FOR ANCHOR BOLT SIZE AND SPACING, SEE DETAIL 5/S8.1.
15. HOLDOWNS ARE DENOTED THUS ON PLAN: HD5A . SEE DETAILS 4 AND 8 ON SHEET S8.1. ALL HOLDOWNS REQUIRE 4x OR 6x POST PER DETAIL 4/S8.1.
16. FOR LOCATIONS AND DETAILS OF NON-LOAD BEARING PARTITIONS, SEE ARCH DWGS.
17. FOR TYPICAL WOOD DETAILS SEE SHEET S8.1.
18. MARK BF-1 INDICATES A BRACED FRAME. SEE SHEET S3.1 FOR FRAME ELEVATION.
19. FOR SLAB-ON-GRADE DETAIL AT WALKER UNDER FLOOR DUCT SYSTEM, SEE DETAIL 15/S5.1.
20. FOR EDGE OF SLAB, SEE DETAIL 1/S5.2.
21. PROVIDE NAILERS @ ALL HSS COLUMNS PER DETAIL 19/S8.1.
22. SEE DETAIL 20/S8.3 FOR SKEWED SHEAR WALL INTERSECTIONS.

EXISTING FRAMING NOTES

E1. SEE GENERAL NOTES ON SHEET S1.0.

E2. SEE EXISTING CONSTRUCTION DOCUMENTS FOR COMPLETE INFORMATION

E3. FOR (N) PLY. OVER (E) WALL FRAMING, PROVIDE NAILING & STUDS PER DETAILS ON S8.1

E4. FOR NEW HOLDOWN IN EXISTING FOUNDATION, SEE 8/S8.1.

STRUCTURAL WALL LEGEND

- 2x6 & 3x6 STUDS
- EXISTING STUD WALL TO REMAIN OR BE REPLACED
- 2x8 & 3x8 STUDS
- 4x8 STUDS WHERE NOTED ON PLAN

MARK	COLUMN SIZE	BASE ℄ txBxC	ANCHORS BOLTS (A307 U.O.N.)	BASE ℄ DETAIL
C-E1	(E) GLB 10¾ x 10½	-	-	-
C-E2	(E) 5"ø- XX PIPE	-	-	-
C2	4x6	SEE DETAIL	SEE DETAIL	20c/S8.1
C3	6x6	SEE DETAIL	SEE DETAIL	20c/S8.1
C4	W10x26	℄1x1'-0"x1'-4"	4-¾"ø	20/S7.1
C5	8x8	SEE DETAIL	SEE DETAIL	20c/S8.1
C6	HSS 7x7x5/16	SEE DETAIL	SEE DETAIL	3/S7.1
C7	HSS 5x5x1/4	℄¾"x0'-11"x0'-11"	4-¾"ø	20/S7.1
C7a	HSS 5x5x3/16	℄¾"x0'-11"x0'-11"	4-¾"ø	20/S7.1
C8	HSS 8x8x1/4	℄¾"x1'-0"x1'-0"	4-¾"ø	20/S7.1
C9	HSS 8x8x1/4	℄1"x1'-2"x1'-2"	4-¾"ø	20/S7.1
C10	GLB 10¾ x 10½	SEE DETAIL	SEE DETAIL	20/S5.2
C11	4x8	SEE DETAIL	SEE DETAIL	20c/S8.1

1 COLUMN SCHEDULE

TRUE NORTH
PROJ. NORTH

FIELD PAOLI

Architecture
1045 Sansome St.
Suite 206
San Francisco
California, 94111
Tel. 415. 788. 6606
Fax 415. 788. 6650

SARATOGA LIBRARY

SANTA CLARA COUNTY LIBRARY

13650 Saratoga Avenue
Saratoga, California 95070

DASSE DESIGN INC.
STRUCTURAL ENGINEERS
33 New Montgomery St., Suite 850
San Francisco, CA 94105
415/243-9400 - Fax 415/243-9185

REGISTERED PROFESSIONAL ENGINEER
WILLIAM A. ANDREWS
S 3773
Exp. 3-31-02
STRUCTURAL
STATE OF CALIFORNIA

DATE	JANUARY 25, 2002

REVISIONS
CONSTRUCTION DOCUMENTS
BID SET 10/26/01
1 ADDENDUM 1 11/20/01
CONFORM SET RE-PLOT

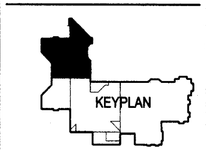

PARTIAL FOUNDATION PLAN

SCALE	1/8" = 1'-0"
DRAWN BY	SRB
CHECKED BY	SRB
JOB NO.	00B222

PHASE - 2

SHEET NO. S2.1A

All drawings and written material appearing herein constitute the original and unpublished work of the architect and the same may not be duplicated, used, or disclosed without the written consent of the architect © Field Paoli

XREF: E:\00B222\STRCT\Phase_2\00B222S2-21.dwg
XREF: E:\00B222\STRCT\00B222-TB.dwg
XREF: E:\00B222\ARCH\plr-1.dwg

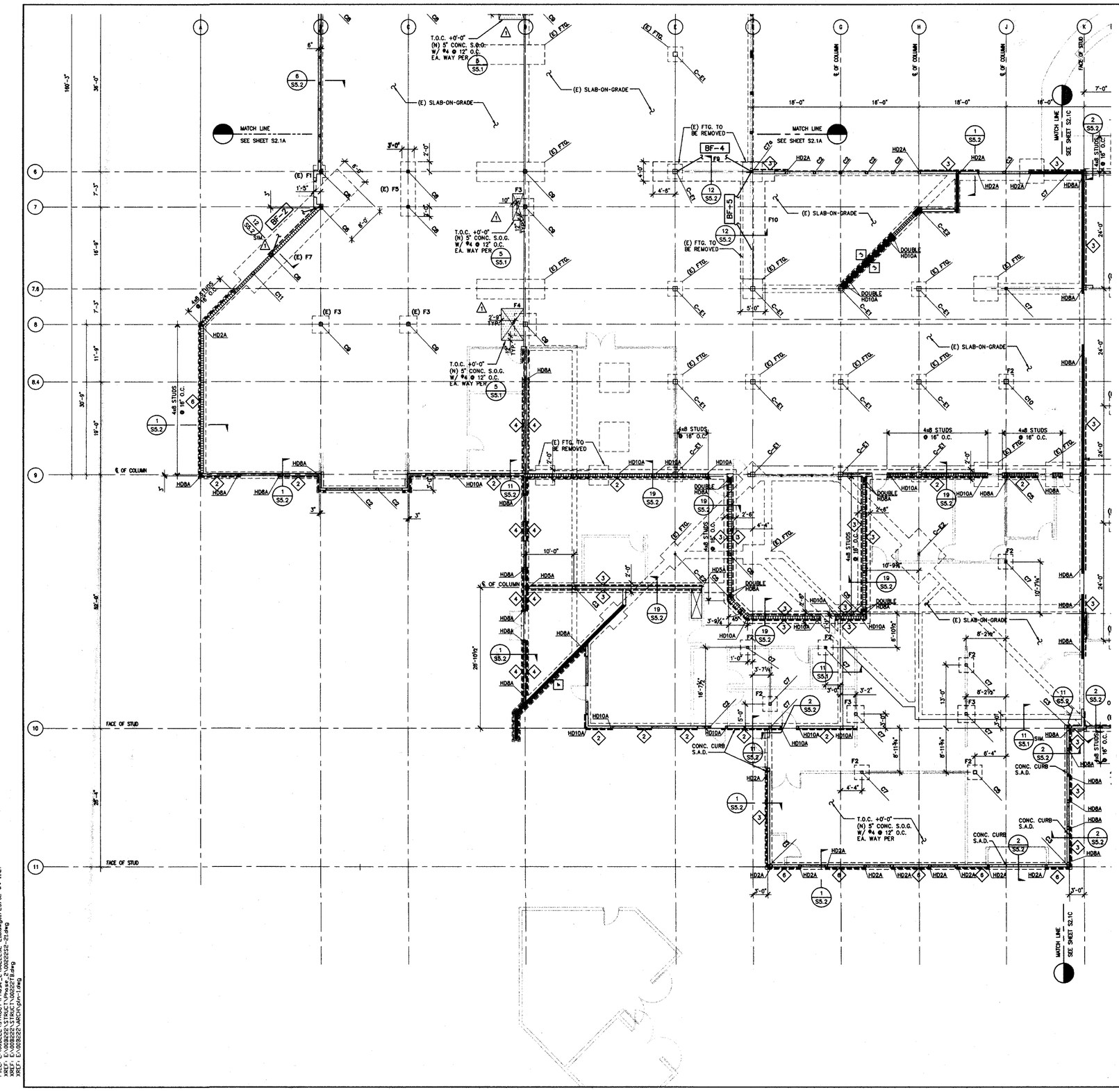

FOUNDATION NOTES

1. SEE GENERAL NOTES ON SHEET S1.0.
2. SEE TYPICAL CONCRETE DETAILS ON SHEET S5.1.
3. SEE BASE PLATE DETAILS ON SHEET S7.1.
4. FOUNDATION PLAN IS TAKEN ABOVE SLAB-ON-GRADE. NOMINAL TOP OF SLAB ELEVATION IS CALLED OUT IN PLAN. RELATIVE SLAB ELEVATIONS WITH RESPECT TO SLAB REFERENCE ELEVATION ARE SHOWN THUS: T.O.C. (-0'-2").
5. ELEVATIONS OF BOTTOM OF FOOTINGS WITH RESPECT TO SLAB REFERENCE ELEVATIONS ARE SHOWN THUS: 2'-6", ETC.
6. SEE GENERAL NOTES ON S1.0 FOR FOOTING DESIGN CRITERIA.
7. EXCAVATIONS SHALL BE MADE AS NEAR AS POSSIBLE TO THE NEAT LINES REQUIRED BY THE SIZE AND SHAPE OF THE STRUCTURE. NO MATERIAL IS TO BE EXCAVATED UNNECESSARILY.
8. ALL FOUNDATION EXCAVATIONS MUST BE REVIEWED AND APPROVED BY THE SOILS ENGINEER PRIOR TO PLACEMENT OF CONCRETE, AND SUBMIT WRITTEN REPORT TO CITY OF SARATOGA PRIOR TO CITY INSPECTION. PROJECT STRUCTURAL ENGINEER SHALL PROVIDE STRUCTURAL OBSERVATION OF ALL FOUNDATIONS/FOOTINGS/PIER REINFORCEMENT AND SUBMIT WRITTEN INSPECTION REPORT TO CITY OF SARATOGA BUILDING OFFICIAL PRIOR TO CITY INSPECTION.
9. VERIFY LOCATION OF UNDERGROUND UTILITIES BEFORE EXCAVATION. NOTIFY ARCHITECT PRIOR TO EXCAVATION IN THE EVENT SUCH UTILITIES ARE ENCOUNTERED.
10. FOR DRAINAGE DETAILS, SUMPS, PITS, DAMP PROOFING, TRENCHES, CURBS, EXTERIOR WALKS, UTILITIES, EQUIPMENT DETAILS, STEPS, ETC., SEE DRAWINGS OTHER THAN STRUCTURAL.
11. EXTERIOR WALLS SHALL HAVE 1/2" PLYWOOD SHEATHING ON EXTERIOR FACE OF STUDS UNLESS OTHERWISE NOTED. SEE SCHEDULE ON SHEET S8.1 FOR MINIMUM NAILING.
12. MARKS "—◇—" INDICATE PLYWOOD SHEAR WALLS WITH SHEATHING ON SIDE(S) OF WALL NOTED. SEE SHEAR WALL SCHEDULE ON SHEET S8.1.
13. SLAB CONSTRUCTION AND CONTROL JOINT LOCATIONS SHALL BE APPROVED BY THE ARCHITECT PRIOR TO PLACING ANY CONCRETE. S.A.D. FOR EXACT LOCATIONS OF CONTROL JOINTS AND SEE DETAIL 6/S5.1.
14. SILL BOLTS ARE REQUIRED AT ALL STUD WALLS SHOWN ON STRUCTURAL PLANS. SEE DETAILS 3, 5 AND 6 ON SHEET S8.1. FOR ANCHOR BOLT SIZE AND SPACING, SEE DETAIL 5/S8.1.
15. HOLDOWNS ARE DENOTED THUS ON PLAN: HD5A - SEE DETAILS 4 AND 8 ON SHEET S8.1. ALL HOLDOWNS REQUIRE 4x OR 6x POST PER DETAIL 4/S8.1.
16. FOR LOCATIONS AND DETAILS OF NON-LOAD BEARING PARTITIONS, SEE ARCH DWGS.
17. FOR TYPICAL WOOD DETAILS SEE SHEET S8.1.
18. MARK BF-1 INDICATES A BRACED FRAME. SEE SHEET S3.1 FOR FRAME ELEVATION.
19. FOR SLAB-ON-GRADE DETAIL AT WALKER UNDER FLOOR DUCT SYSTEM, SEE DETAIL 15/S5.1.
20. FOR EDGE OF SLAB, SEE DETAIL 1/S5.2.
21. PROVIDE NAILERS @ ALL HSS COLUMNS PER DETAIL 19/S8.1.
22. SEE DETAIL 20/S8.3 FOR SKEWED SHEAR WALL INTERSECTIONS.

EXISTING FRAMING NOTES

E1. SEE GENERAL NOTES ON SHEET S1.0.

E2. SEE EXISTING CONSTRUCTION DOCUMENTS FOR COMPLETE INFORMATION

E3. FOR (N) PLY. OVER (E) WALL FRAMING, PROVIDE NAILING & STUDS PER DETAILS ON S8.1

E4. FOR NEW HOLDOWN IN EXISTING FOUNDATION, SEE 8/S8.1.

STRUCTURAL WALL LEGEND

- 2x6 & 3x6 STUDS
- EXISTING STUD WALL TO REMAIN OR BE REPLACED
- 2x8 & 3x8 STUDS
- 4x8 STUDS WHERE NOTED ON PLAN

MARK	COLUMN SIZE	BASE PL 1xBxC	ANCHORS BOLTS (A307 U.O.N.)	BASE PL DETAIL
C-E1	(E) GLB 10 3/4 x 10 1/2	-	-	-
C-E2	(E) 5"ø- XX PIPE	-	-	-
C2	4x6	SEE DETAIL	SEE DETAIL	20c/S8.1
C3	6x6	SEE DETAIL	SEE DETAIL	20c/S8.1
C4	W10x26	PL 1x1'-0"x1'-4"	4-3/4"ø	20/S7.1
C5	8x8	SEE DETAIL	SEE DETAIL	20c/S8.1
C6	HSS 7x7x5/16	SEE DETAIL	SEE DETAIL	3/S7.1
C7	HSS 5x5x1/4	PL 3/4"x0'-11"x0'-11"	4-3/4"ø	20/S7.1
C7a	HSS 5x5x5/16	PL 3/4"x0'-11"x0'-11"	4-3/4"ø	20/S7.1
C8	HSS 6x6x1/4	PL 3/4"x1'-0"x1'-0"	4-3/4"ø	20/S7.1
C9	HSS 8x8x1/4	PL 1"x1'-2"x1'-2"	4-3/4"ø	20/S7.1
C10	GLB 10 3/4 x 10 1/2	SEE DETAIL	SEE DETAIL	20/S5.2
C11	4x8	SEE DETAIL	SEE DETAIL	20c/S8.1

1 COLUMN SCHEDULE

TRUE NORTH
PROJ. NORTH

FIELD PAOLI

Architecture
1045 Sansome St.
Suite 206
San Francisco
California, 94111
Tel. 415. 788. 6606
Fax 415. 788. 6650

SARATOGA LIBRARY

SANTA CLARA COUNTY LIBRARY

13650 Saratoga Avenue
Saratoga, California 95070

DASSE DESIGN INC.
STRUCTURAL ENGINEERS
33 New Montgomery St., Suite 850
San Francisco, CA 94105
415/243-9100 - Fax 415/243-9185

REGISTERED PROFESSIONAL ENGINEER
WILLIAM A. ANDREWS
S 3773
Exp. 3-31-02
STRUCTURAL
STATE OF CALIFORNIA

DATE JANUARY 25, 2002

REVISIONS
CONSTRUCTION DOCUMENTS
BID SET 10/26/01
1 ADDENDUM 1 11/20/01
CONFORM SET RE-PLOT

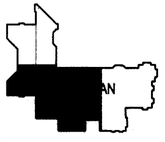

PARTIAL FOUNDATION PLAN

SCALE 1/8" = 1'-0"
DRAWN BY SRB
CHECKED BY SRB
JOB NO. 00B222

PHASE - 2

SHEET NO. **S2.1B**

All drawings and written material appearing herein constitute the original and unpublished work of the architect and the same may not be duplicated, used, or disclosed without the written consent of the architect © Field Paoli

FILE: E:\00B222\STRUCT\Phase_2\00B222S2-21b.dwg01/25/02 at 11:27
XREF: E:\00B222\STRUCT\Phase_2\00B222S2-21.dwg
XREF: E:\00B222\STRUCT\00B222TB.dwg
XREF: E:\00B222\ARCH\pln-1.dwg

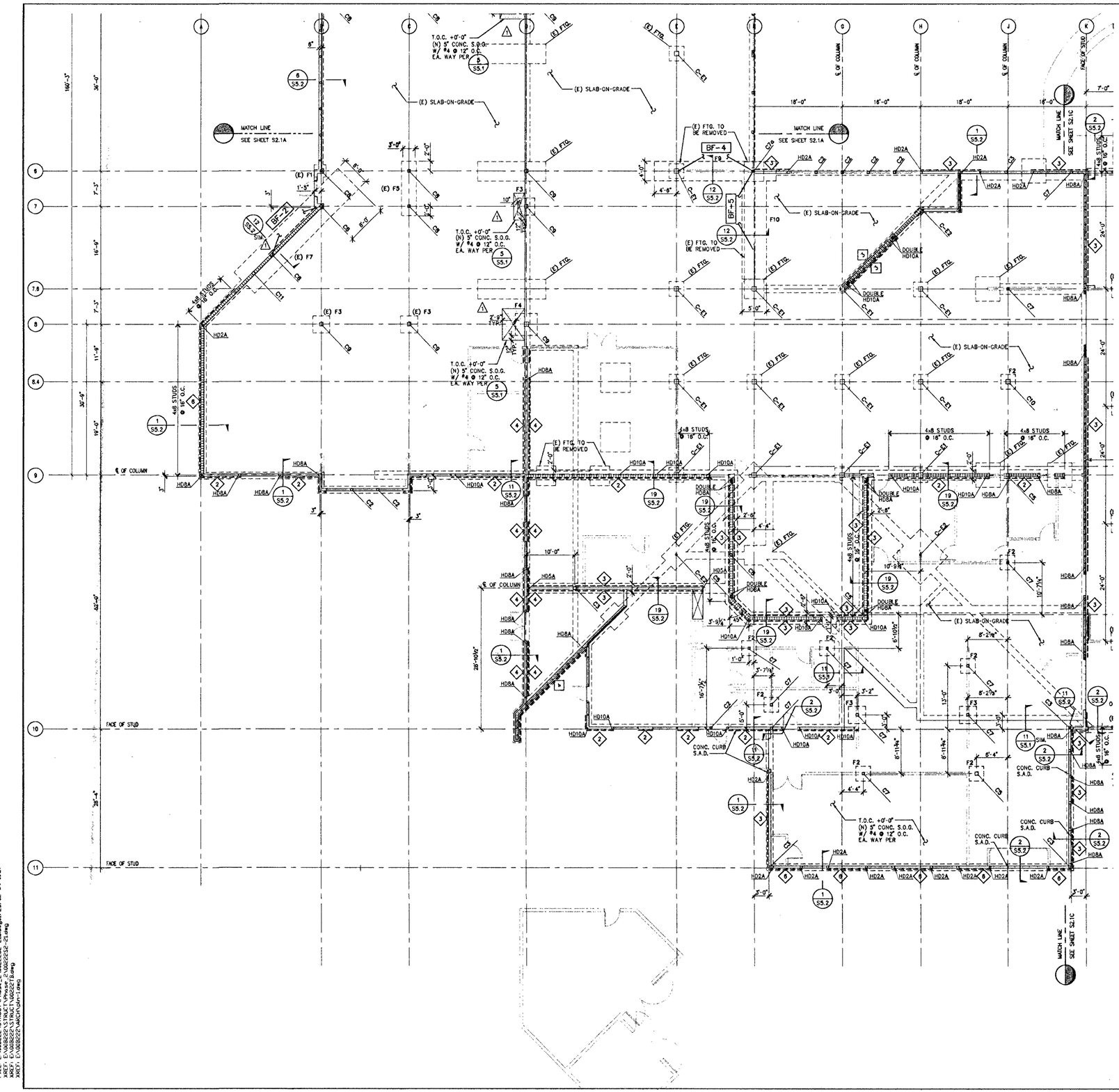

FOUNDATION NOTES

1. SEE GENERAL NOTES ON SHEET S1.0.
2. SEE TYPICAL CONCRETE DETAILS ON SHEET S5.1.
3. SEE BASE PLATE DETAILS ON SHEET S7.1.
4. FOUNDATION PLAN IS TAKEN ABOVE SLAB-ON-GRADE. NOMINAL TOP OF SLAB ELEVATION IS CALLED OUT IN PLAN. RELATIVE SLAB ELEVATIONS WITH RESPECT TO SLAB REFERENCE ELEVATION ARE SHOWN THUS: T.O.C. (-0'-2").
5. ELEVATIONS OF BOTTOM OF FOOTINGS WITH RESPECT TO SLAB REFERENCE ELEVATIONS ARE SHOWN THUS: (-2'-8"), ETC.
6. SEE GENERAL NOTES ON S1.0 FOR FOOTING DESIGN CRITERIA.
7. EXCAVATIONS SHALL BE MADE AS NEAR AS POSSIBLE TO THE NEAT LINES REQUIRED BY THE SIZE AND SHAPE OF THE STRUCTURE. NO MATERIAL IS TO BE EXCAVATED UNNECESSARILY.
8. ALL FOUNDATION EXCAVATIONS MUST BE REVIEWED AND APPROVED BY THE SOILS ENGINEER PRIOR TO PLACEMENT OF CONCRETE, AND SUBMIT WRITTEN REPORT TO CITY OF SARATOGA PRIOR TO CITY INSPECTION. PROJECT STRUCTURAL ENGINEER SHALL PROVIDE STRUCTURAL OBSERVATION OF ALL FOUNDATIONS/FOOTINGS/PIER REINFORCEMENT AND SUBMIT WRITTEN INSPECTION REPORT TO CITY OF SARATOGA BUILDING OFFICIAL PRIOR TO CITY INSPECTION.
9. VERIFY LOCATION OF UNDERGROUND UTILITIES BEFORE EXCAVATION. NOTIFY ARCHITECT PRIOR TO EXCAVATION IN THE EVENT SUCH UTILITIES ARE ENCOUNTERED.
10. FOR DRAINAGE DETAILS, SUMPS, PITS, DAMP PROOFING, TRENCHES, CURBS, EXTERIOR WALKS, UTILITIES, EQUIPMENT DETAILS, STEPS, ETC., SEE DRAWINGS OTHER THAN STRUCTURAL.
11. EXTERIOR WALLS SHALL HAVE 1/2" PLYWOOD SHEATHING ON EXTERIOR FACE OF STUDS UNLESS OTHERWISE NOTED. SEE SCHEDULE ON SHEET S8.1 FOR MINIMUM NAILING.
12. MARKS "4" INDICATE PLYWOOD SHEAR WALLS WITH SHEATHING ON SIDE(S) OF WALL NOTED. SEE SHEAR WALL SCHEDULE ON SHEET S8.1.
13. SLAB CONSTRUCTION AND CONTROL JOINT LOCATIONS SHALL BE APPROVED BY THE ARCHITECT PRIOR TO PLACING ANY CONCRETE. S.A.D. FOR EXACT LOCATIONS OF CONTROL JOINTS AND SEE DETAIL 8/S5.1.
14. SILL BOLTS ARE REQUIRED AT ALL STUD WALLS SHOWN ON STRUCTURAL PLANS. SEE DETAILS 3, 5 AND 6 ON SHEET S8.1. FOR ANCHOR BOLT SIZE AND SPACING, SEE DETAIL 5/S8.1.
15. HOLDOWNS ARE DENOTED THUS ON PLAN: HD5A, SEE DETAILS 4 AND 8 ON SHEET S8.1. ALL HOLDOWNS REQUIRE 4x OR 6x POST PER DETAIL 4/S8.1.
16. FOR LOCATIONS AND DETAILS OF NON-LOAD BEARING PARTITIONS, SEE ARCH DWGS.
17. FOR TYPICAL WOOD DETAILS SEE SHEET S8.1.
18. MARK BF-1 INDICATES A BRACED FRAME. SEE SHEET S3.1 FOR FRAME ELEVATION.
19. FOR SLAB-ON-GRADE DETAIL AT WALKER UNDER FLOOR DUCT SYSTEM, SEE DETAIL 15/S5.1.
20. FOR EDGE OF SLAB, SEE DETAIL 1/S5.2.
21. PROVIDE NAILERS @ ALL HSS COLUMNS PER DETAIL 19/S8.1.
22. SEE DETAIL 20/S8.3 FOR SKEWED SHEAR WALL INTERSECTIONS.

EXISTING FRAMING NOTES

E1. SEE GENERAL NOTES ON SHEET S1.0.

E2. SEE EXISTING CONSTRUCTION DOCUMENTS FOR COMPLETE INFORMATION

E3. FOR (N) PLY. OVER (E) WALL FRAMING, PROVIDE NAILING & STUDS PER DETAILS ON S8.1

E4. FOR NEW HOLDOWN IN EXISTING FOUNDATION, SEE 8/S8.1.

STRUCTURAL WALL LEGEND

- 2x6 & 3x6 STUDS
- EXISTING STUD WALL TO REMAIN OR BE REPLACED
- 2x8 & 3x8 STUDS
- 4x8 STUDS WHERE NOTED ON PLAN

MARK	COLUMN SIZE	BASE PL 1x8x6	ANCHORS BOLTS (A307 U.O.N.)	BASE PL DETAIL
C-E1	(E) GLB 10¾ x 10½	-	-	-
C-E2	(E) 5"ø- XX PIPE	-	-	-
C2	4x6	SEE DETAIL	SEE DETAIL	20c/S8.1
C3	6x6	SEE DETAIL	SEE DETAIL	20c/S8.1
C4	W10x26	PL1x1'-0"x1'-4"	4-¾"ø	20/S7.1
C5	6x8	SEE DETAIL	SEE DETAIL	20c/S8.1
C6	HSS 7x7x5/16	SEE DETAIL	SEE DETAIL	3/S7.1
C7	HSS 5x5x1/4	PL3/4"x0'-11"x0'-11"	4-¾"ø	20/S7.1
C7a	HSS 5x5x5/16	PL3/4"x0'-11"x0'-11"	4-¾"ø	20/S7.1
C8	HSS 6x6x1/4	PL3/4"x1'-0"x1'-0"	4-¾"ø	20/S7.1
C9	HSS 8x8x1/4	PL1"x1'-2"x1'-2"	4-¾"ø	20/S7.1
C10	GLB 10¾ x 10½	SEE DETAIL	SEE DETAIL	20/S5.2
C11	4x8	SEE DETAIL	SEE DETAIL	20c/S8.1

1 COLUMN SCHEDULE

TRUE NORTH
PROJ. NORTH

FIELD PAOLI

Architecture
1045 Sansome St.
Suite 206
San Francisco
California, 94111
Tel. 415. 788. 6606
Fax 415. 788. 6650

SARATOGA LIBRARY

SANTA CLARA COUNTY LIBRARY

13650 Saratoga Avenue
Saratoga, California 95070

DASSE DESIGN INC.
STRUCTURAL ENGINEERS
33 New Montgomery St. Suite 850
San Francisco, CA 94105
415/243-0400 - Fax 415/243-9185

REGISTERED PROFESSIONAL ENGINEER
WILLIAM ANDREWS
S 3773
Exp. 3-31-02
STRUCTURAL
STATE OF CALIFORNIA

DATE	JANUARY 25, 2002

REVISIONS
- CONSTRUCTION DOCUMENTS
- BID SET 10/26/01
- 1 ADDENDUM 1 11/20/01
- CONFORM SET RE-PLOT

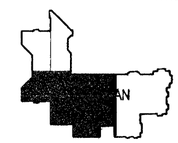

PARTIAL FOUNDATION PLAN

SCALE	1/8" = 1'-0"
DRAWN BY	SRB
CHECKED BY	SRB
JOB NO.	00B222

PHASE - 2

SHEET NO. **S2.1B**

All drawings and written material appearing herein constitute the original and unpublished work of the architect and the same may not be duplicated, used, or disclosed without the written consent of the architect © Field Paoli

FILE: E:\00B222\STRUCT\Phase-2\00B222S2-21Lsong01/25/02 at 11:27
XREF: E:\00B222\STRUCT\Phase-2\00B222S2-21Lsong
XREF: E:\00B222\STRUCT\00B222FB.dwg
XREF: E:\00B222\ARCH\UM-1.dwg

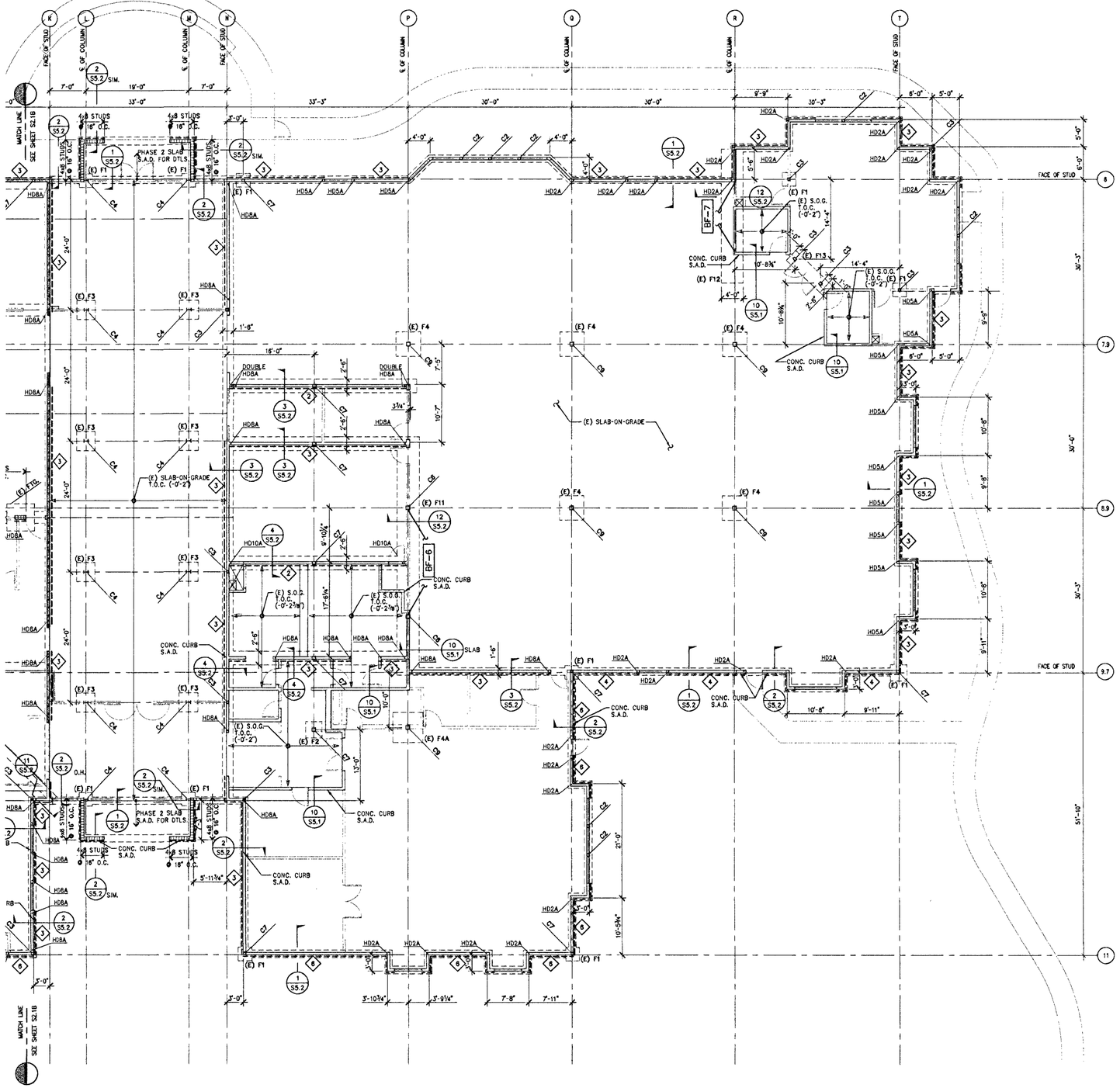

FOUNDATION NOTES

1. SEE GENERAL NOTES ON SHEET S1.0.
2. SEE TYPICAL CONCRETE DETAILS ON SHEET S5.1.
3. SEE BASE PLATE DETAILS ON SHEET S7.1.
4. FOUNDATION PLAN IS TAKEN ABOVE SLAB-ON-GRADE. NOMINAL TOP OF SLAB ELEVATION IS CALLED OUT IN PLAN. RELATIVE SLAB ELEVATIONS WITH RESPECT TO SLAB REFERENCE ELEVATION ARE SHOWN THUS: T.O.C. (-0'-2").
5. ELEVATIONS OF BOTTOM OF FOOTINGS WITH RESPECT TO SLAB REFERENCE ELEVATIONS ARE SHOWN THUS: 2'-8", ETC.
6. SEE GENERAL NOTES ON S1.0 FOR FOOTING DESIGN CRITERIA.
7. EXCAVATIONS SHALL BE MADE AS NEAR AS POSSIBLE TO THE NEAT LINES REQUIRED BY THE SIZE AND SHAPE OF THE STRUCTURE. NO MATERIAL IS TO BE EXCAVATED UNNECESSARILY.
8. ALL FOUNDATION EXCAVATIONS MUST BE REVIEWED AND APPROVED BY THE SOILS ENGINEER PRIOR TO PLACEMENT OF CONCRETE, AND SUBMIT WRITTEN REPORT TO CITY OF SARATOGA PRIOR TO CITY INSPECTION. PROJECT STRUCTURAL ENGINEER SHALL PROVIDE STRUCTURAL OBSERVATION OF ALL FOUNDATIONS/FOOTINGS/PIER REINFORCEMENT AND SUBMIT WRITTEN INSPECTION REPORT TO CITY OF SARATOGA BUILDING OFFICIAL PRIOR TO CITY INSPECTION.
9. VERIFY LOCATION OF UNDERGROUND UTILITIES BEFORE EXCAVATION. NOTIFY ARCHITECT PRIOR TO EXCAVATION IN THE EVENT SUCH UTILITIES ARE ENCOUNTERED.
10. FOR DRAINAGE DETAILS, SUMPS, PITS, DAMP PROOFING, TRENCHES, CURBS, EXTERIOR WALKS, UTILITIES, EQUIPMENT DETAILS, STEPS, ETC., SEE DRAWINGS OTHER THAN STRUCTURAL.
11. EXTERIOR WALLS SHALL HAVE 1/2" PLYWOOD SHEATHING ON EXTERIOR FACE OF STUDS UNLESS OTHERWISE NOTED. SEE SCHEDULE ON SHEET S8.1 FOR MINIMUM NAILING.
12. MARKS "—3—" INDICATE PLYWOOD SHEAR WALLS WITH SHEATHING ON SIDE(S) OF WALL NOTED. SEE SHEAR WALL SCHEDULE ON SHEET S8.1.
13. SLAB CONSTRUCTION AND CONTROL JOINT LOCATIONS SHALL BE APPROVED BY THE ARCHITECT PRIOR TO PLACING ANY CONCRETE. S.A.D. FOR EXACT LOCATIONS OF CONTROL JOINTS AND SEE DETAIL 6/S5.1.
14. SILL BOLTS ARE REQUIRED AT ALL STUD WALLS SHOWN ON STRUCTURAL PLANS. SEE DETAILS 3, 5 AND 6 ON SHEET S8.1. FOR ANCHOR BOLT SIZE AND SPACING, SEE DETAIL 5/S8.1.
15. HOLDOWNS ARE DENOTED THUS ON PLAN: HD5A . SEE DETAILS 4 AND 8 ON SHEET S8.1. ALL HOLDOWNS REQUIRE 4x OR 6x POST PER DETAIL 4/S8.1.
16. FOR LOCATIONS AND DETAILS OF NON-LOAD BEARING PARTITIONS, SEE ARCH DWGS.
17. FOR TYPICAL WOOD DETAILS SEE SHEET S8.1.
18. MARK BF-1 INDICATES A BRACED FRAME. SEE SHEET S3.1 FOR FRAME ELEVATION.
19. FOR SLAB-ON-GRADE DETAIL AT WALKER UNDER FLOOR DUCT SYSTEM, SEE DETAIL 15/S5.1.
20. FOR EDGE OF SLAB, SEE DETAIL 1/S5.2.
21. PROVIDE NAILERS @ ALL HSS COLUMNS PER DETAIL 19/S8.1.
22. SEE DETAIL 20/S8.3 FOR SKEWED SHEAR WALL INTERSECTIONS.

EXISTING FRAMING NOTES

E1. SEE GENERAL NOTES ON SHEET S1.0.

E2. SEE EXISTING CONSTRUCTION DOCUMENTS FOR COMPLETE INFORMATION

E3. FOR (N) PLY. OVER (E) WALL FRAMING, PROVIDE NAILING & STUDS PER DETAILS ON S8.1

E4. FOR NEW HOLDOWN IN EXISTING FOUNDATION, SEE 8/S8.1.

STRUCTURAL WALL LEGEND

- 2x8 & 3x6 STUDS
- EXISTING STUD WALL TO REMAIN OR BE REPLACED
- 2x8 & 3x8 STUDS
- 4x8 STUDS WHERE NOTED ON PLAN

MARK	COLUMN SIZE	BASE PL txBxG	ANCHORS BOLTS (A307 U.O.N.)	BASE PL DETAIL
C-E1	(E) GLB 10¾ x 10½	-	-	-
C-E2	(E) 5"ø- XX PIPE	-	-	-
C2	4x8	SEE DETAIL	SEE DETAIL	20c/S8.1
C3	6x8	SEE DETAIL	SEE DETAIL	20c/S8.1
C4	W10x26	PL1x1'-0"x1'-4"	4-¾"ø	20/S7.1
C5	8x8	SEE DETAIL	SEE DETAIL	20c/S8.1
C6	HSS 7x7x5/16	SEE DETAIL	SEE DETAIL	3/S7.1
C7	HSS 5x5x1/4	PL3/4"xx0'-11"x0'-11"	4-¾"ø	20/S7.1
C7a	HSS 5x5x5/16	PL3/4"xx0'-11"x0'-11"	4-¾"ø	20/S7.1
C8	HSS 6x6x1/4	PL3/4"x1'-0"x1'-0"	4-¾"ø	20/S7.1
C9	HSS 8x8x1/4	PL1"x1'-2"x1'-2"	4-¾"ø	20/S7.1
C10	GLB 10¾ x 10½	SEE DETAIL	SEE DETAIL	20/S5.2
C11	4x8	SEE DETAIL	SEE DETAIL	20c/S8.1

1 COLUMN SCHEDULE

TRUE NORTH
PROJ. NORTH

FIELD PAOLI

Architecture
1045 Sansome St.
Suite 206
San Francisco
California, 94111
Tel. 415. 788. 6606
Fax 415. 788. 6650

SARATOGA LIBRARY

SANTA CLARA COUNTY LIBRARY

13650 Saratoga Avenue
Saratoga, California 95070

DASSE DESIGN INC.
STRUCTURAL ENGINEERS
33 New Montgomery St. Suite 850
San Francisco CA 94105
415/243-8400 — Fax 415/243-8168

REGISTERED PROFESSIONAL ENGINEER WILLIAM A. ANDREWS S 3773 Exp. 3-31-02 STRUCTURAL STATE OF CALIFORNIA

DATE	OCTOBER 28, 2001
REVISIONS	
	CONSTRUCTION DOCUMENTS BID SET

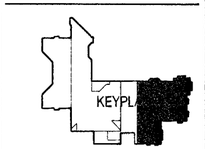

PARTIAL FOUNDATION PLAN

SCALE	1/8" = 1'-0"
DRAWN BY	SRB
CHECKED BY	SRB
JOB NO.	008222

PHASE - 2

SHEET NO. S2.1C

All drawings and written material appearing herein constitute the original and unpublished work of the architect and the same may not be duplicated, used, or disclosed without the written consent of the architect © Field Paoli

FILE: E:\008222\STRUCT\Phase 2\008222S2-2Lc.dwg08/14/01 at 16:15
PLOTTED: 08/14/01 BY: SRB XREF: J:\Saratoga Library\Dwg\CD-Phase2\Ab Rcp\rcp-1.dwg
XREF: E:\008222\STRUCT\008222S2-2Lc.dwg XREF: J:\Saratoga Library\Dwg\CD-Phase2\AE Plans\grid.dwg
XREF: E:\008222\ARCH\cpr-1.dwg

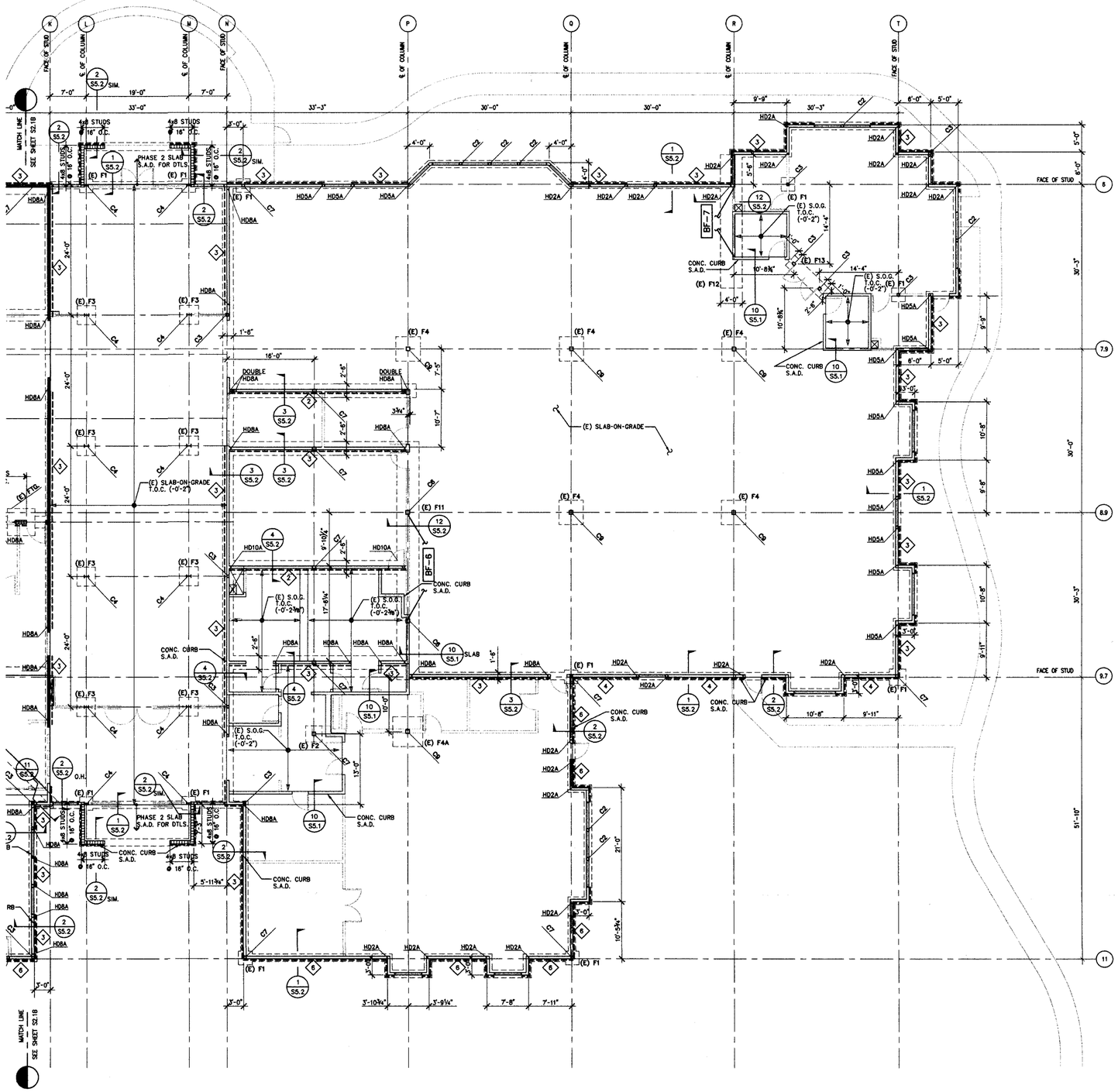

FILE: E:\00B222\STRUCT\Phase_2\00B222-2lc.dwg08/14/01 at 16:15
XREF: E:\00B222\STRUCT\Phase-2\00B222S2-2l.dwg XREF: J:\Saratoga Library\Dwg\CD-Phase2\A6 Rcp\rcp-1.dwg
XREF: E:\00B222\STRUCT\00B222Title.dwg XREF: J:\Saratoga Library\Dwg\CD-Phase2\A2 Plans\grid.dwg
XREF: E:\00B222\ARCH\grid-1.dwg

FOUNDATION NOTES

1. SEE GENERAL NOTES ON SHEET S1.0.
2. SEE TYPICAL CONCRETE DETAILS ON SHEET S5.1.
3. SEE BASE PLATE DETAILS ON SHEET S7.1.
4. FOUNDATION PLAN IS TAKEN ABOVE SLAB-ON-GRADE. NOMINAL TOP OF SLAB ELEVATION IS CALLED OUT IN PLAN. RELATIVE SLAB ELEVATIONS WITH RESPECT TO SLAB REFERENCE ELEVATION ARE SHOWN THUS: T.O.C. (-0'-2").
5. ELEVATIONS OF BOTTOM OF FOOTINGS WITH RESPECT TO SLAB REFERENCE ELEVATIONS ARE SHOWN THUS: -2'-6" , ETC.
6. SEE GENERAL NOTES ON S1.0 FOR FOOTING DESIGN CRITERIA.
7. EXCAVATIONS SHALL BE MADE AS NEAR AS POSSIBLE TO THE NEAT LINES REQUIRED BY THE SIZE AND SHAPE OF THE STRUCTURE. NO MATERIAL IS TO BE EXCAVATED UNNECESSARILY.
8. ALL FOUNDATION EXCAVATIONS MUST BE REVIEWED AND APPROVED BY THE SOILS ENGINEER PRIOR TO PLACEMENT OF CONCRETE, AND SUBMIT WRITTEN REPORT TO CITY OF SARATOGA PRIOR TO CITY INSPECTION. PROJECT STRUCTURAL ENGINEER SHALL PROVIDE STRUCTURAL OBSERVATION OF ALL FOUNDATIONS/FOOTINGS/PIER REINFORCEMENT AND SUBMIT WRITTEN INSPECTION REPORT TO CITY OF SARATOGA BUILDING OFFICIAL PRIOR TO CITY INSPECTION.
9. VERIFY LOCATION OF UNDERGROUND UTILITIES BEFORE EXCAVATION. NOTIFY ARCHITECT PRIOR TO EXCAVATION IN THE EVENT SUCH UTILITIES ARE ENCOUNTERED.
10. FOR DRAINAGE DETAILS, SUMPS, PITS, DAMP PROOFING, TRENCHES, CURBS, EXTERIOR WALKS, UTILITIES, EQUIPMENT DETAILS, STEPS, ETC., SEE DRAWINGS OTHER THAN STRUCTURAL.
11. EXTERIOR WALLS SHALL HAVE 1/2" PLYWOOD SHEATHING ON EXTERIOR FACE OF STUDS UNLESS OTHERWISE NOTED. SEE SCHEDULE ON SHEET S8.1 FOR MINIMUM NAILING.
12. MARKS "4" INDICATE PLYWOOD SHEAR WALLS WITH SHEATHING ON SIDE(S) OF WALL NOTED. SEE SHEAR WALL SCHEDULE ON SHEET S8.1.
13. SLAB CONSTRUCTION AND CONTROL JOINT LOCATIONS SHALL BE APPROVED BY THE ARCHITECT PRIOR TO PLACING ANY CONCRETE. S.A.D. FOR EXACT LOCATIONS OF CONTROL JOINTS AND SEE DETAIL 6/S5.1.
14. SILL BOLTS ARE REQUIRED AT ALL STUD WALLS SHOWN ON STRUCTURAL PLANS. SEE DETAILS 3, 5 AND 6 ON SHEET S8.1. FOR ANCHOR BOLT SIZE AND SPACING, SEE DETAIL 5/S8.1.
15. HOLDOWNS ARE DENOTED THUS ON PLAN: HD5A . SEE DETAILS 4 AND 8 ON SHEET S8.1. ALL HOLDOWNS REQUIRE 4x OR 6x POST PER DETAIL 4/S8.1.
16. FOR LOCATIONS AND DETAILS OF NON-LOAD BEARING PARTITIONS, SEE ARCH DWGS.
17. FOR TYPICAL WOOD DETAILS SEE SHEET S8.1.
18. MARK BF-1 INDICATES A BRACED FRAME. SEE SHEET S3.1 FOR FRAME ELEVATION.
19. FOR SLAB-ON-GRADE DETAIL AT WALKER UNDER FLOOR DUCT SYSTEM, SEE DETAIL 15/S5.1.
20. FOR EDGE OF SLAB, SEE DETAIL 1/S5.2.
21. PROVIDE NAILERS @ ALL HSS COLUMNS PER DETAIL 19/S8.1.
22. SEE DETAIL 20/S8.3 FOR SKEWED SHEAR WALL INTERSECTIONS.

EXISTING FRAMING NOTES

E1. SEE GENERAL NOTES ON SHEET S1.0.

E2. SEE EXISTING CONSTRUCTION DOCUMENTS FOR COMPLETE INFORMATION

E3. FOR (N) PLY. OVER (E) WALL FRAMING, PROVIDE NAILING & STUDS PER DETAILS ON S8.1

E4. FOR NEW HOLDOWN IN EXISTING FOUNDATION, SEE 8/S8.1.

STRUCTURAL WALL LEGEND

- 2x6 & 3x6 STUDS
- EXISTING STUD WALL TO REMAIN OR BE REPLACED
- 2x8 & 3x8 STUDS
- 4x8 STUDS WHERE NOTED ON PLAN

MARK	COLUMN SIZE	BASE PL t x B x C	ANCHORS BOLTS (A307 U.O.N.)	BASE PL DETAIL
C-E1	(E) GLB 10¾ x 10½	-	-	-
C-E2	(E) 5"ø- XX PIPE	-	-	-
C2	4x6	SEE DETAIL	SEE DETAIL	20c/S8.1
C3	6x6	SEE DETAIL	SEE DETAIL	20c/S8.1
C4	W10x26	PL1x1'-0"x1'-4"	4-¾"ø	20/S7.1
C5	8x8	SEE DETAIL	SEE DETAIL	20c/S8.1
C6	HSS 7x7x5/16	SEE DETAIL	SEE DETAIL	3/S7.1
C7	HSS 5x5x1/4	PL3/4"x0'-11"x0'-11"	4-¾"ø	20/S7.1
C7a	HSS 5x5x5/16	PL3/4"x0'-11"x0'-11"	4-¾"ø	20/S7.1
C8	HSS 6x6x1/4	PL3/4"x1'-0"x1'-0"	4-¾"ø	20/S7.1
C9	HSS 8x8x1/4	PL1"x1'-2"x1'-2"	4-¾"ø	20/S7.1
C10	GLB 10¾ x 10½	SEE DETAIL	SEE DETAIL	20/S5.2
C11	4x8	SEE DETAIL	SEE DETAIL	20c/S8.1

1 COLUMN SCHEDULE

TRUE NORTH
PROJ. NORTH

FIELD PAOLI

Architecture
1045 Sansome St.
Suite 206
San Francisco
California, 94111
Tel. 415. 788. 6606
Fax 415. 788. 6650

SARATOGA LIBRARY

SANTA CLARA COUNTY LIBRARY

13650 Saratoga Avenue
Saratoga, California 95070

DASSE DESIGN INC.
STRUCTURAL ENGINEERS
33 New Montgomery St., Suite 850
San Francisco CA 94105
415/243-9400 - Fax 415/243-9185

REGISTERED PROFESSIONAL ENGINEER WILLIAM A. ANDREWS S 3773 Exp. 3-31-02 STRUCTURAL STATE OF CALIFORNIA

DATE	OCTOBER 26, 2001
REVISIONS	

CONSTRUCTION DOCUMENTS
BID SET

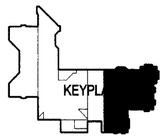

PARTIAL FOUNDATION PLAN

SCALE	1/8" = 1'-0"
DRAWN BY	SRB
CHECKED BY	SRB
JOB NO.	00B222

PHASE - 2

SHEET NO. S2.1C

All drawings and written material appearing herein constitute the original and unpublished work of the architect and the same may not be duplicated, used, or disclosed without the written consent of the architect ©Field Paoli

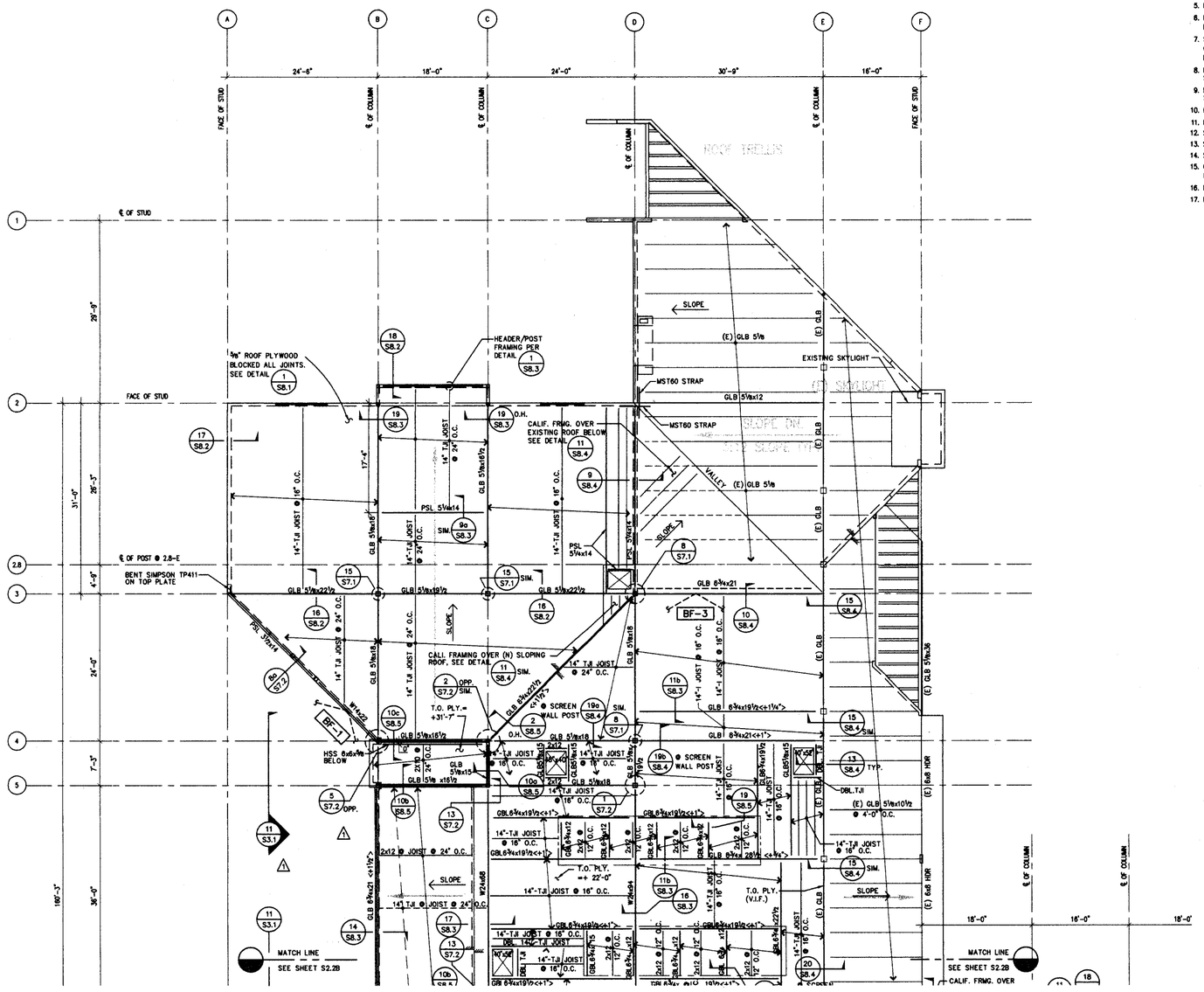

ROOF FRAMING NOTES:

1. SEE GENERAL NOTES ON SHEET S1.0.
2. SEE FOUNDATION NOTES ON SHEETS S2.1A, B, C, FOR INFORMATION NOT NOTED.
3. ROOF ELEVATION VARIES.
4. ELEVATION OF TOP OF PLYWOOD IS SHOWN THUS: T.O. PLY.=+0'-0" ETC. ON PLAN. PLATE HEIGHTS OF STRUCTURAL STUD WALLS ARE SHOWN THUS: TW=+0'-0", ETC. ON PLAN. ELEVATIONS SO SHOWN ARE GIVEN WITH REFERENCE TO NOMINAL GROUND FLOOR LINE.
5. MARKS "GLB5⅛x19½", ETC. INDICATE GLULAM BEAMS.
6. MARKS "14"-TJI", ETC. INDICATE WOOD I-JOISTS. SEE I-JOIST NOTES AND DETAILS ON S8.2.
7. STRUCTURAL STUD WALLS SUPPORTING THE ROOF ARE SHOWN THUS = = = = = ON PLAN AND SHALL BE 2x6 STUDS @ 16" O.C. U.O.N. SEE ARCHITECTURAL DRAWINGS FOR NON-LOAD BEARING PARTITIONS.
8. EXTERIOR WALLS SHALL HAVE ½" PLYWOOD SHEATHING ON EXTERIOR FACE OF STUDS, TYP., U.O.N.
9. FOR ROOF DRAINS, OPENINGS, FACIA DETAILS, ETC., SEE DRAWINGS OTHER THAN STRUCTURAL.
10. ROOF PLYWOOD JOINTS SHALL BE BLOCKED PER DETAIL /S8.1.
11. FOR FRAMING AROUND OPENINGS, SEE DETAILS 17/S8.1.
12. SEE SHEET S8.1 FOR TYPICAL WOOD DETAILS.
13. SEE DETAIL 13/S8.1 FOR HANGER SCHEDULE.
14. SEE SHEET S7.1 FOR TYPICAL STEEL DETAILS.
15. GENERAL CONTRACTOR SHALL COORDINATE THE LOCATION OF EQUIPMENT SUPPORT BEAM WITH EQUIPMENT REQUIREMENTS.
16. MARKS <+2> DENOTE GLULAM BEAM CAMBER UP AT MIDSPAN OF BEAM.
17. BOLT HOLES TO BE 1/16" OVER SIZE U.N.O.

FIELD PAOLI

Architecture
1045 Sansome St.
Suite 206
San Francisco
California, 94111
Tel. 415. 788. 6606
Fax 415. 788. 6650

SARATOGA LIBRARY

SANTA CLARA COUNTY LIBRARY

13650 Saratoga Avenue
Saratoga, California 95070

DASSE DESIGN INC.
STRUCTURAL ENGINEERS
33 New Montgomery St., Suite 800
San Francisco, CA 94105
415/243-9100 - Fax 415/243-9185

REGISTERED PROFESSIONAL ENGINEER WILLIAM A. ANDREWS S 3773 Exp. 3-31-02 STRUCTURAL STATE OF CALIFORNIA

DATE	JANUARY 25, 2002

REVISIONS

CONSTRUCTION DOCUMENTS
BID SET 10/26/01
⚠1 ADDENDUM 1 11/20/01
CONFORM SET RE-PLOT

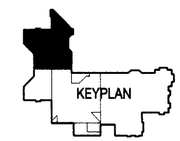

PARTIAL ROOF FRAMING PLAN

SCALE	1/8" = 1'-0"
DRAWN BY	SRB
CHECKED BY	SRB
JOB NO.	00B222

PHASE - 2

SHEET NO. **S2.2A**

TRUE NORTH
PROJ. NORTH

All drawings and written material appearing herein constitute the original and unpublished work of the architect and the same may not be duplicated, used, or disclosed without the written consent of the architect ©Field Paoli

XREF: E:\00B222\STRUCT\GDN-72501\00B222TB.dwg
XREF: E:\00B222\STRUCT\GDN-72501\00B222-CE.dwg
XREF: E:\00B222\ARCH\ph-1.dwg
XREF: E:\00B222\ARCH\9-25-01\roof-1.dwg

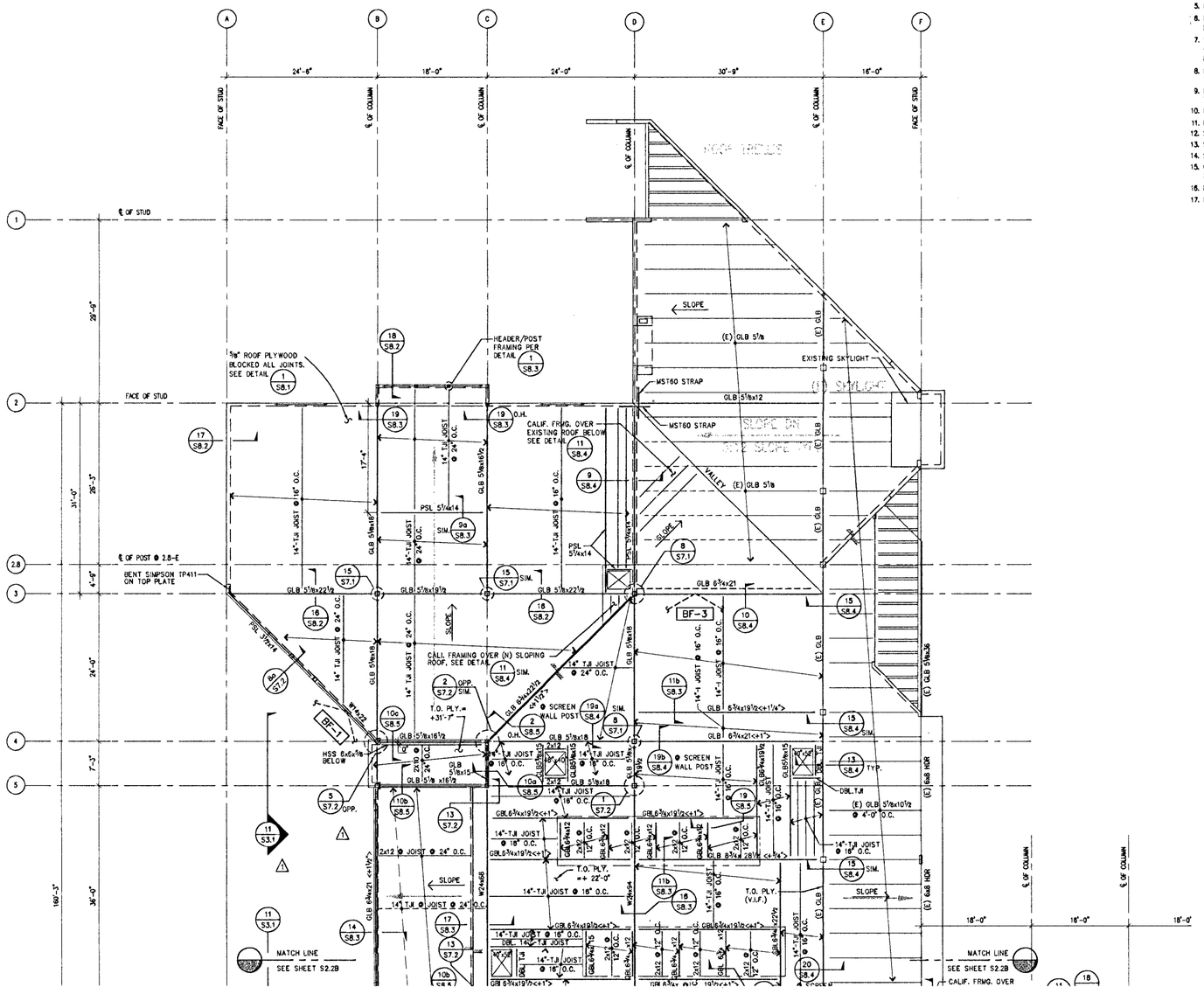

ROOF FRAMING NOTES:

1. SEE GENERAL NOTES ON SHEET S1.0.
2. SEE FOUNDATION NOTES ON SHEETS S2.1A, B, C, FOR INFORMATION NOT NOTED.
3. ROOF ELEVATION VARIES.
4. ELEVATION OF TOP OF PLYWOOD IS SHOWN THUS: T.O. PLY.=+0'-0" ETC. ON PLAN. PLATE HEIGHTS OF STRUCTURAL STUD WALLS ARE SHOWN THUS: TW=+0'-0", ETC. ON PLAN. ELEVATIONS SO SHOWN ARE GIVEN WITH REFERENCE TO NOMINAL GROUND FLOOR LINE.
5. MARKS "GLB5⅛x19½", ETC. INDICATE GLULAM BEAMS.
6. MARKS "14"-TJI", ETC. INDICATE WOOD I-JOISTS. SEE I-JOIST NOTES AND DETAILS ON S8.2.
7. STRUCTURAL STUD WALLS SUPPORTING THE ROOF ARE SHOWN THUS = = = = ON PLAN AND SHALL BE 2x6 STUDS @ 16" O.C. U.O.N. SEE ARCHITECTURAL DRAWINGS FOR NON-LOAD BEARING PARTITIONS.
8. EXTERIOR WALLS SHALL HAVE ½" PLYWOOD SHEATHING ON EXTERIOR FACE OF STUDS, TYP., U.O.N.
9. FOR ROOF DRAINS, OPENINGS, FACIA DETAILS, ETC., SEE DRAWINGS OTHER THAN STRUCTURAL.
10. ROOF PLYWOOD JOINTS SHALL BE BLOCKED PER DETAIL /S8.1.
11. FOR FRAMING AROUND OPENINGS, SEE DETAILS 17/S8.1.
12. SEE SHEET S8.1 FOR TYPICAL WOOD DETAILS.
13. SEE DETAIL 13/S8.1 FOR HANGER SCHEDULE.
14. SEE SHEET S7.1 FOR TYPICAL STEEL DETAILS.
15. GENERAL CONTRACTOR SHALL COORDINATE THE LOCATION OF EQUIPMENT SUPPORT BEAM WITH EQUIPMENT REQUIREMENTS.
16. MARKS <+2> DENOTE GLULAM BEAM CAMBER UP AT MIDSPAN OF BEAM.
17. BOLT HOLES TO BE 1/16" OVER SIZE U.N.O.

FIELD PAOLI

Architecture
1045 Sansome St.
Suite 206
San Francisco
California, 94111
Tel. 415. 788. 6606
Fax 415. 788. 6650

SARATOGA LIBRARY

SANTA CLARA COUNTY LIBRARY

13650 Saratoga Avenue
Saratoga, California 95070

DASSE DESIGN INC.
STRUCTURAL ENGINEERS
33 New Montgomery St. Suite 800
San Francisco, CA 94105
415/243-9100 - fax 415/243-9169

REGISTERED PROFESSIONAL ENGINEER
WILLIAM A. ANDREWS
S 3773
Exp. 3-31-02
STRUCTURAL
STATE OF CALIFORNIA

DATE	JANUARY 25, 2002

REVISIONS
- CONSTRUCTION DOCUMENTS
- BID SET 10/26/01
- 1 ADDENDUM 1 11/20/01
- CONFORM SET RE-PLOT

KEYPLAN

PARTIAL ROOF FRAMING PLAN

SCALE	1/8" = 1'-0"
DRAWN BY	SRB
CHECKED BY	SRB
JOB NO.	00B222

PHASE - 2

SHEET NO. **S2.2A**

TRUE NORTH
PROJ. NORTH

All drawings and written material appearing herein constitute the original and unpublished work of the architect and the same may not be duplicated, used, or disclosed without the written consent of the architect ©Field Paoli

XREF: E:\00B222\ARCH\9-25-01\roof-1.dwg
XREF: E:\00B222\STRUCT\00B222B.dwg
XREF: E:\00B222\STRUCT\GN-7SQU\00B222B.dwg
XREF: E:\00B222\ARCH\gn-1.dwg

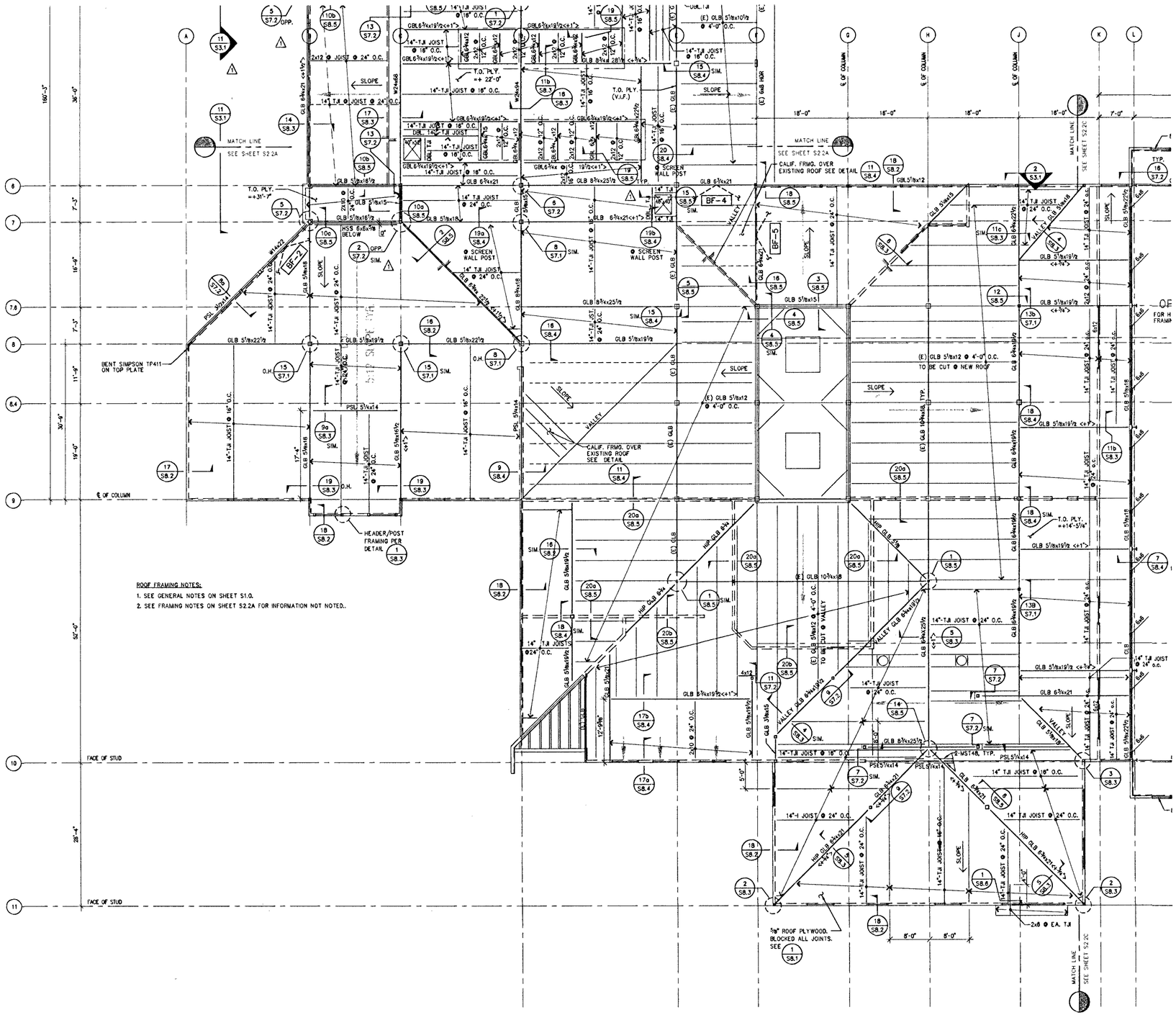

FIELD PAOLI

Architecture
1045 Sansome St.
Suite 206
San Francisco
California, 94111
Tel. 415. 788. 6606
Fax 415. 788. 6650

SARATOGA LIBRARY

SANTA CLARA COUNTY LIBRARY

13650 Saratoga Avenue
Saratoga, California 95070

DASSE DESIGN INC.
STRUCTURAL ENGINEERS
33 New Montgomery St., Suite 800
San Francisco CA 94105
415/243-8400 – Fax 415/243-9188

REGISTERED PROFESSIONAL ENGINEER
WILLIAM A. ANDREWS
S 3773
Exp. 3-31-02
STRUCTURAL
STATE OF CALIFORNIA

DATE	JANUARY 25, 2002

REVISIONS
- CONSTRUCTION DOCUMENTS
- BID SET 10/26/01
- ⚠ ADDENDUM 1 11/20/01
- CONFORM SET RE-PLOT

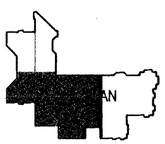

PARTIAL ROOF FRAMING PLAN

SCALE	1/8" = 1'-0"
DRAWN BY	SRB
CHECKED BY	SRB
JOB NO.	008222

PHASE - 2

SHEET NO. **S2.2B**

All drawings and written material appearing herein constitute the original and unpublished work of the architect and the same may not be duplicated, used, or disclosed without the written consent of the architect ©Field Paoli

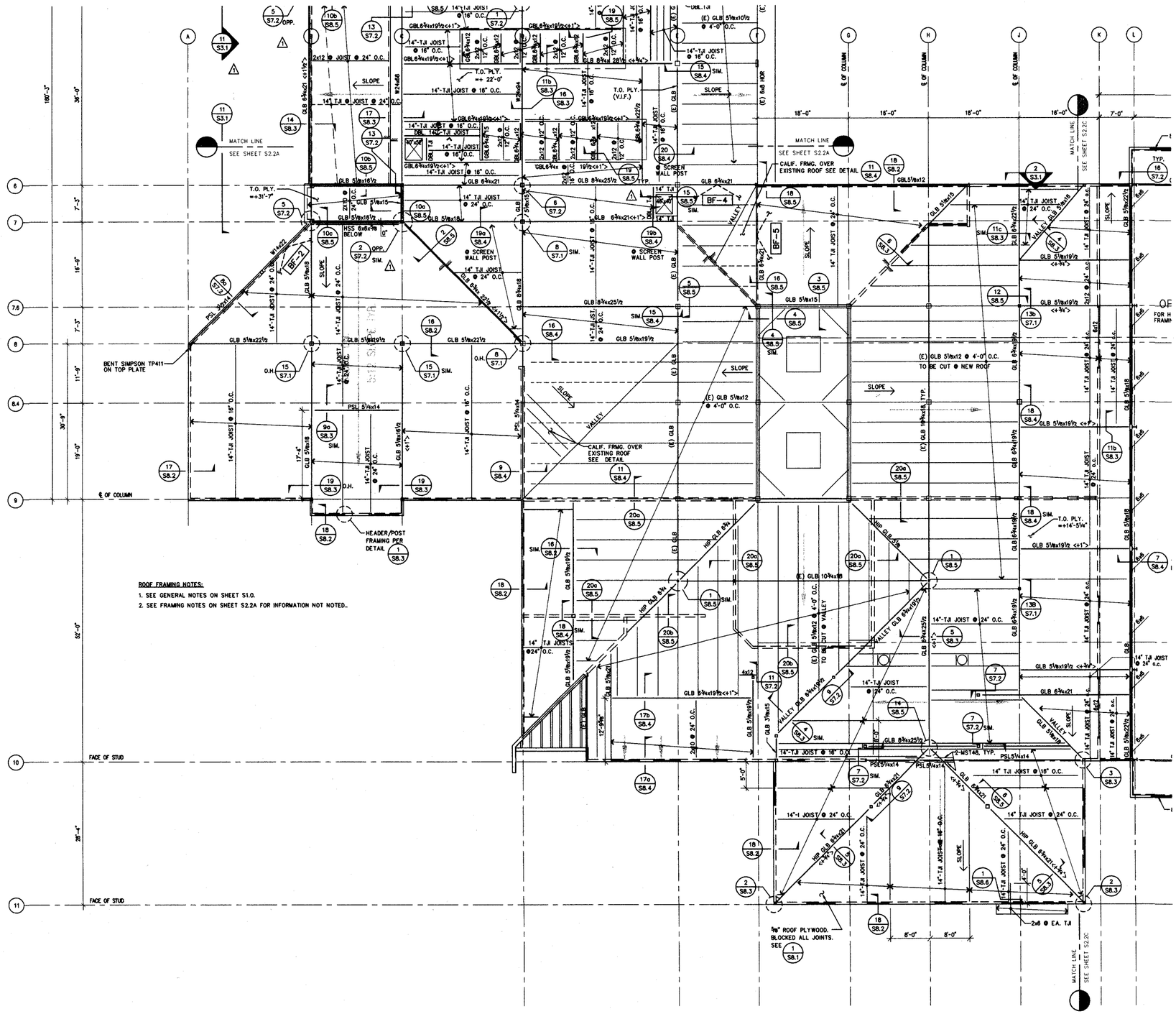

ROOF FRAMING NOTES:

1. SEE GENERAL NOTES ON SHEET S1.0.
2. SEE FRAMING NOTES ON SHEET S2.2A FOR INFORMATION NOT NOTED..

FIELD PAOLI

Architecture
1045 Sansome St.
Suite 206
San Francisco
California, 94111
Tel. 415. 788. 6606
Fax 415. 788. 6650

SARATOGA LIBRARY

SANTA CLARA COUNTY LIBRARY

13650 Saratoga Avenue
Saratoga, California 95070

DASSE DESIGN INC.
STRUCTURAL ENGINEERS
33 New Montgomery St., Suite 850
San Francisco, CA 94105
415/243-0400 - Fax 415/243-9195

REGISTERED PROFESSIONAL ENGINEER
WILLIAM A. ANDREWS
S 3773
Exp. 3-31-02
STRUCTURAL
STATE OF CALIFORNIA

DATE	JANUARY 25, 2002

REVISIONS

CONSTRUCTION DOCUMENTS
BID SET 10/26/01
⚠ ADDENDUM 1 11/20/01
CONFORM SET RE-PLOT

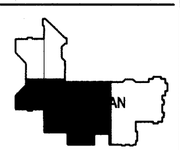

PARTIAL ROOF FRAMING PLAN

SCALE	1/8" = 1'-0"
DRAWN BY	SRB
CHECKED BY	SRB
JOB NO.	008222

PHASE - 2

SHEET NO. **S2.2B**

All drawings and written material appearing herein constitute the original and unpublished work of the architect and the same may not be duplicated, used, or disclosed without the written consent of the architect ©Field Paoli

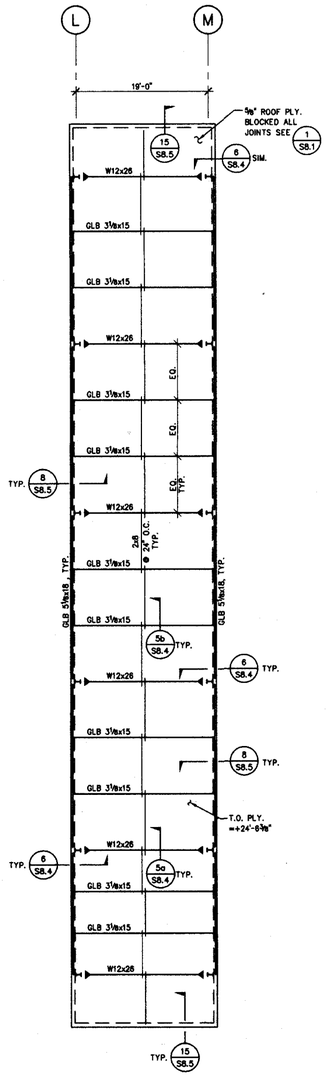

1 HIGH ROOF FRAMING PLAN

1/8" = 1'-0"

ROOF FRAMING NOTES:

1. SEE GENERAL NOTES ON SHEET S1.0.
2. SEE FRAMING NOTES ON SHEET S2.2A FOR INFORMATION NOT NOTED..

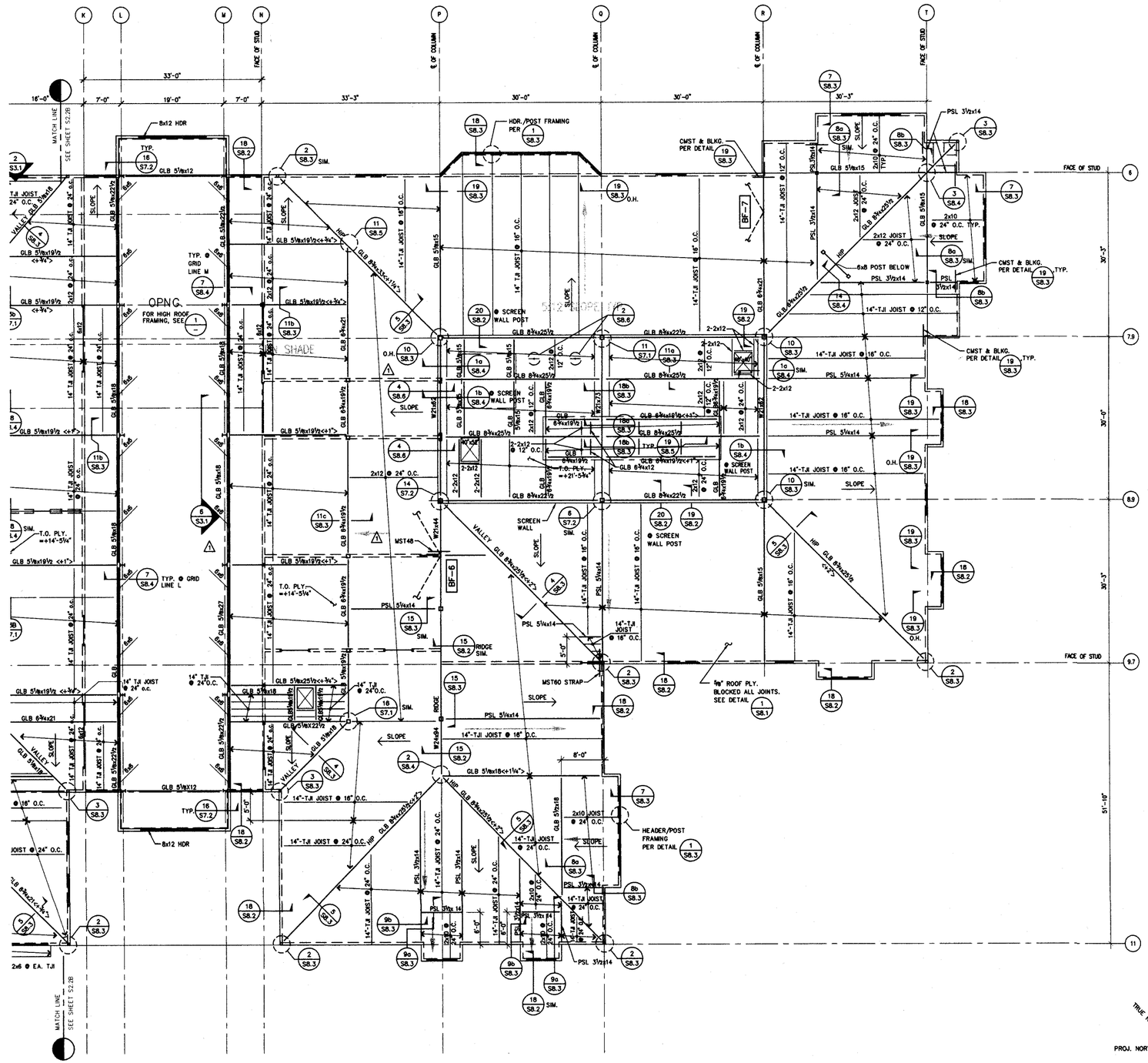

FIELD PAOLI

Architecture
1045 Sansome St.
Suite 206
San Francisco
California, 94111
Tel. 415. 788. 6606
Fax 415. 788. 6650

SARATOGA LIBRARY

SANTA CLARA COUNTY LIBRARY

13650 Saratoga Avenue
Saratoga, California 95070

DASSE DESIGN INC.
STRUCTURAL ENGINEERS
33 New Montgomery St., Suite 850
San Francisco CA 94105
415/243-8400 – Fax 415/243-0195

REGISTERED PROFESSIONAL ENGINEER
WILLIAM A. ANDREWS
S 3773
Exp. 3-31-02
STRUCTURAL
STATE OF CALIFORNIA

DATE	JANUARY 25, 2002

REVISIONS
- CONSTRUCTION DOCUMENTS
- BID SET 10/26/01
- 1 ADDENDUM 1 11/20/01
- CONFORM SET RE-PLOT

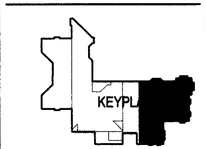

PARTIAL ROOF FRAMING PLAN

SCALE	1/8" = 1'-0"
DRAWN BY	SRB
CHECKED BY	SRB
JOB NO.	00B222

PHASE - 2

SHEET NO. **S2.2C**

TRUE NORTH
PROJ. NORTH

All drawings and written material appearing herein constitute the original and unpublished work of the architect and the same may not be duplicated, used, or disclosed without the written consent of the architect © Field Paoli

XREF: E:\00B222\STRUCT\GEN-72501\00222T8.dwg
XREF: E:\00B222\STRUCT\GEN-72501\00222S2-22.dwg
XREF: E:\00B222\ARCH\9-25-01\roof-1.dwg

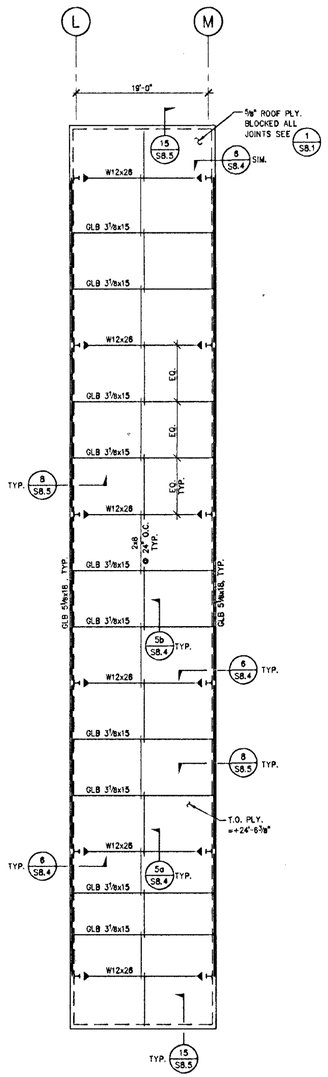

1 HIGH ROOF FRAMING PLAN

1/8" = 1'-0"

ROOF FRAMING NOTES:

1. SEE GENERAL NOTES ON SHEET S1.0.
2. SEE FRAMING NOTES ON SHEET S2.2A FOR INFORMATION NOT NOTED..

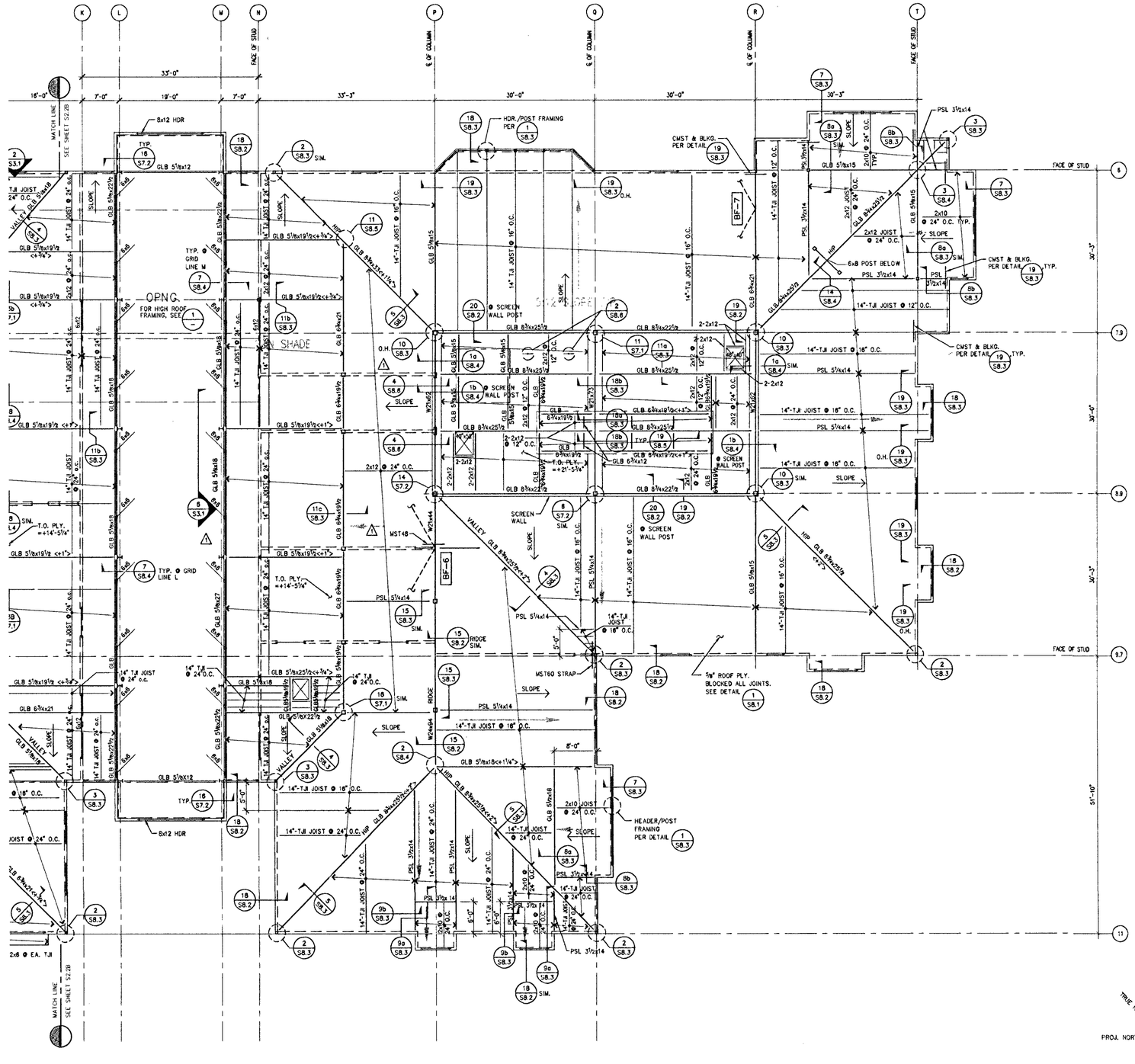

FIELD PAOLI

Architecture
1045 Sansome St.
Suite 206
San Francisco
California, 94111
Tel. 415. 788. 6606
Fax 415. 788. 6650

SARATOGA LIBRARY

SANTA CLARA COUNTY LIBRARY

13650 Saratoga Avenue
Saratoga, California 95070

DASSE DESIGN INC.
STRUCTURAL ENGINEERS
33 New Montgomery St., Suite 850
San Francisco, CA 94105
415/243-8408 – Fax 415/243-8168

REGISTERED PROFESSIONAL ENGINEER
WILLIAM ANDREWS
S 3773
Exp. 3-31-02
STRUCTURAL
STATE OF CALIFORNIA

DATE	JANUARY 25, 2002

REVISIONS

CONSTRUCTION DOCUMENTS
BID SET 10/26/01
1 ADDENDUM 1 11/20/01
CONFORM SET RE-PLOT

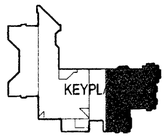

PARTIAL ROOF FRAMING PLAN

SCALE	1/8" = 1'-0"
DRAWN BY	SRB
CHECKED BY	SRB
JOB NO.	00B222

PHASE - 2

SHEET NO. **S2.2C**

All drawings and written material appearing herein constitute the original and unpublished work of the architect and the same may not be duplicated, used, or disclosed without the written consent of the architect © Field Paoli

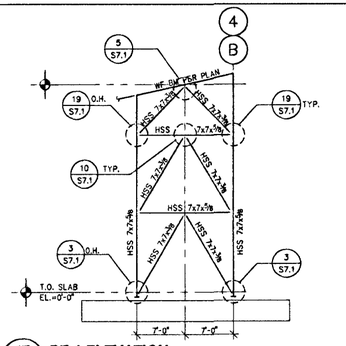

17 / — BF-1 ELEVATION TRUE ELEVATION-45° WALL 1/8"=1'-0"

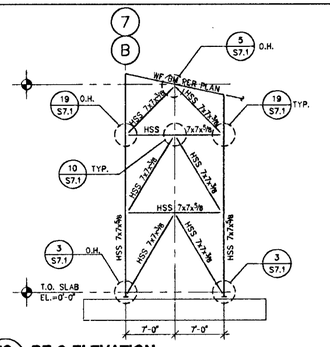

13 / — BF-2 ELEVATION TRUE ELEVATION-45° WALL 1/8"=1'-0"

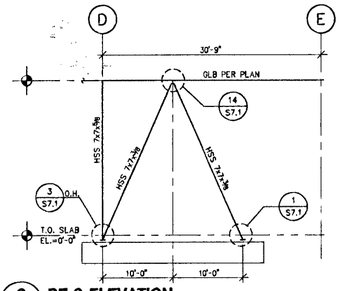

9 / — BF-3 ELEVATION ON GRID LINE 3 1/8"=1'-0"

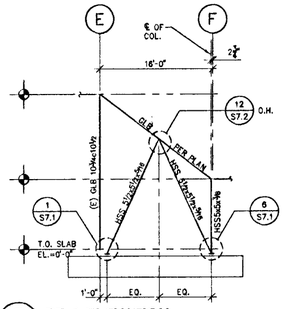

5 / — BF-4 ELEVATION ON GRID LINE 6 1/8"=1'-0"

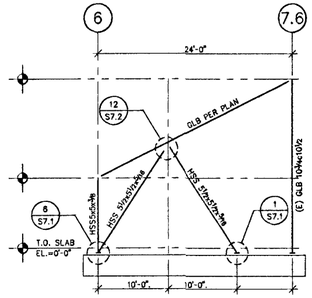

1 / — BF-5 ELEVATION ON GRID LINE F 1/8"=1'-0"

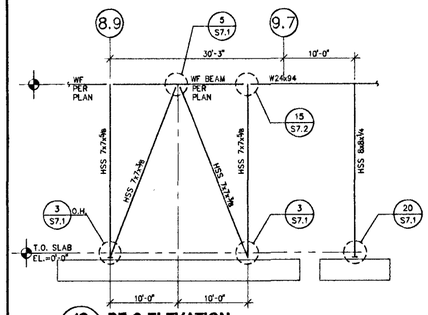

18 / — BF-6 ELEVATION ON GRID LINE P 1/8"=1'-0"

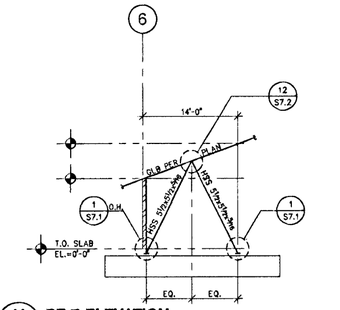

14 / — BF-7 ELEVATION ON GRID LINE R 1/8"=1'-0"

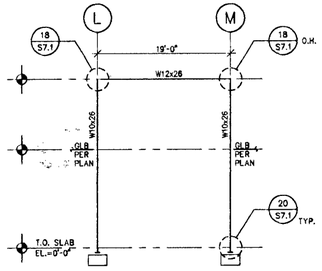

10 / — MOMENT FRAME 1/8"=1'-0"

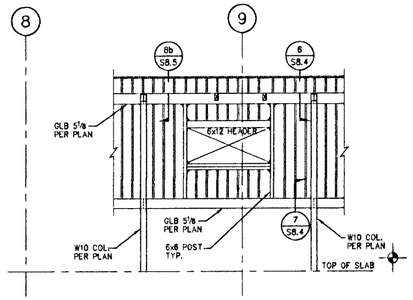

6 / — FRAMING ELEVATION 1/8"=1'-0"

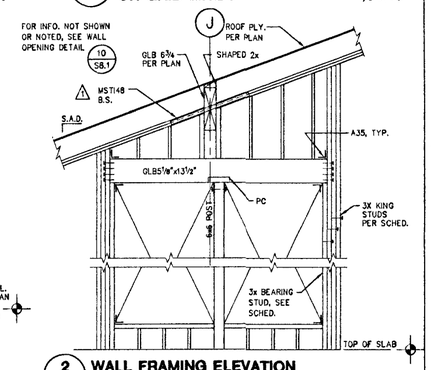

2 / — WALL FRAMING ELEVATION 3/8"=1'-0"

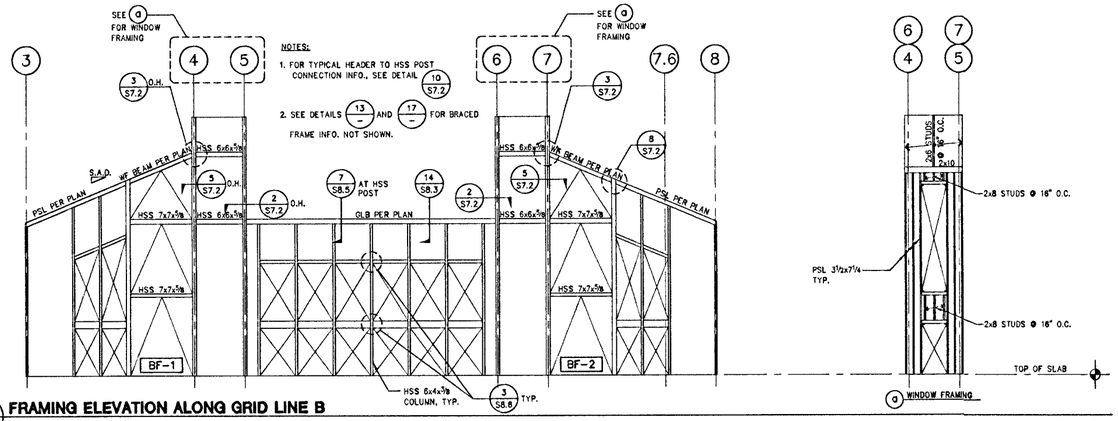

11 / — FRAMING ELEVATION ALONG GRID LINE B 1/8"=1'-0"

FIELD PAOLI

Architecture
1045 Sansome St.
Suite 206
San Francisco
California, 94111
Tel. 415. 788. 6606
Fax 415. 788. 6650

SARATOGA LIBRARY

SANTA CLARA COUNTY LIBRARY

13650 Saratoga Avenue
Saratoga, California 95070

DASSE DESIGN INC.
STRUCTURAL ENGINEERS
33 New Montgomery St., Suite 850
San Francisco CA 94105
415/243-9400 – Fax 415/243-9185

REGISTERED PROFESSIONAL ENGINEER WILLIAM A. ANDREWS S 3773 Exp. 3-31-02 STRUCTURAL STATE OF CALIFORNIA

DATE	JANUARY 25, 2002

REVISIONS
CONSTRUCTION DOCUMENTS
BID SET 10/26/01
⚠1 ADDENDUM 1 11/20/01
CONFORM SET RE-PLOT

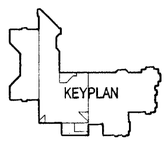

FRAME ELEVATIONS

SCALE	AS NOTED
DRAWN BY	
CHECKED BY	SRB
JOB NO.	00B222

PHASE - 2

SHEET NO. **S3.1**

All drawings and written material appearing herein constitute the original and unpublished work of the architect and the same may not be duplicated, used, or disclosed without the written consent of the architect © Field Paoli

FILE: E:\00B222\STRUCT\Phase_2\00222S2-31.dwg01/25/02 at 11:37
XREF: E:\00B222\STRUCT\00222TB.dwg

1. TYPICAL EXPANSION BOLTS ARE CARBON STEEL HILTI KWIK-BOLTS II AND SHALL COMPLY TO ICBO REPORT #4627 (7/98). ALLOWABLE LOAD WITH F'c=3000 PSI (NORMAL WEIGHT CONCRETE).

DIA.	MINIMUM EMBED.	SHEAR	TENSION	TENSION TEST VALUE	TORQUE TEST VALUE
1/4"	2"	400#	550#	800#	7 FT-LBS.
3/8"	2-1/2"	1100#	1210#	1640#	25 FT-LBS.
1/2"	3-1/2"	1840#	2000#	2800#	45 FT-LBS.
5/8"	4"	3125#	2670#	3552#	95 FT-LBS.
3/4"	4-3/4"	4225#	3625#	4784#	225 FT-LBS.
1"	6"	8625#	5310#	7888#	325 FT-LBS.

THESE LOADS CORRESPOND TO 100% OF THE ICBO ALLOWABLES. SPECIAL INSPECTION OF EXPANSION BOLTS IS REQUIRED. FIELD TESTING MAY BE SUBSTITUTED FOR SPECIAL INSPECTION.

2. INSTALLATION: INSTALL EXPANSION BOLTS IN ACCORDANCE WITH THE REQUIREMENTS GIVEN IN ICBO RESEARCH COMMITTEE RECOMMENDATIONS FOR THE SPECIFIC EXPANSION BOLT.
3. FIELD TESTING: TENSION TEST OR TORQUE TEST TO VALUES AS TABULATED IN NOTE 1 ABOVE. TESTS SHALL BE MADE IN THE PRESENCE OF THE OWNER'S PROJECT REPRESENTATIVE. TEST 50% OF EACH DIAMETER GROUP OF EXPANSION BOLTS. IF ANY ANCHOR FAILS TESTING, TEST ALL ANCHORS OF THE SAME CATEGORY NOT PREVIOUSLY TESTED UNTIL 20 CONSECUTIVE PASS. TESTING SHOULD OCCUR 24 HOURS MINIMUM AFTER INSTALLATION OF THE SUBJECT ANCHORS. ALL ANCHORS INSTALLED THAT DAY SHALL BE TESTED, AND ALL COSTS OF SUCH TESTS AND INSPECTIONS SHALL BE DEDUCTED FROM THE CONTRACT SUM.
4. TENSION TESTS: APPLY TEST LOADS TO EXPANSION BOLTS WITHOUT REMOVING THE NUT, IF POSSIBLE. IF NOT, REMOVE NUT AND INSTALL A THREADED COUPLER TO THE SAME TIGHTNESS OF THE ORIGINAL NUT USING A TORQUE WRENCH AND APPLY LOAD. REACTION LOADS FROM TEST FIXTURES MAY BE APPLIED CLOSE TO THE ANCHOR BEING TESTED, PROVIDED THE BOLT IS NOT RESTRAINED FROM WITHDRAWING BY THE FIXTURE. TEST EQUIPMENT IS TO BE CALIBRATED BY AN APPROVED TESTING LABORATORY IN ACCORDANCE WITH STANDARD RECOGNIZED PROCEDURES. BOLTS SHOULD HAVE NO OBSERVABLE MOVEMENT AT THE TEST LOAD TO BE ACCEPTABLE. (OBSERVABLE MOVEMENT IS DEFINED AS THE WASHER UNDER THE NUT BECOMING LOOSE).
5. TORQUE WRENCH TEST: THE APPLICABLE TEST TORQUE MUST BE REACHED WITHIN ONE-HALF (1/2) TURN OF THE NUT.
6. WHEN INSTALLING DRILLED-IN ANCHORS AND /OR POWDER DRIVEN PINS IN EXISTING REINFORCED CONCRETE, USE CARE AND CAUTION TO AVOID CUTTING OR DAMAGING THE EXISTING REINFORCING BARS.

18 EXPANSION ANCHOR GENERAL NOTES
NO SCALE

REBAR SIZE	THREADED ROD	HOLE DIAMETER	DEPTH OF EMBEDMENT	ALLOWABLE TENSION	TENSION TEST VALUE
#3	3/8"#	1/2"	4"	1900#	2,100#
#4	1/2"#	5/8"	6"	3700#	3,800#
#5	5/8"#	3/4"	7"	4900#	5,900#
#6	3/4"#	1"	8"	7300#	8,400#
#7	7/8"#	1 1/8"	10"	8700#	11,500#
#8	1"#	1 1/4"	12"	11900#	15,000#

1. EPOXY GROUT SHALL BE COVERT INJECTION ADHESIVE OR EQUAL PRODUCT SUBSTITUTED PER SPECIFICATIONS AND SHALL WITH ICBO REPORT #4848 (12/97). FOLLOW EPOXY MANUFACTURER'S INSTRUCTIONS FOR DOWEL INSTALLATION. SPECIAL INSPECTION REQUIRED.
2. SEE DETAILS FOR ADDITIONAL DOWEL INFORMATION.
3. HOLES SHALL BE DRY. CLEAN HOLES WITH NYLON BRUSH TO REMOVE LOOSE MATERIAL AND BLOW OUT HOLES WITH OIL-FREE COMPRESSED AIR.
4. NOTIFY ARCHITECT IMMEDIATELY IF ELEMENTS WITHIN THE EXISTING STRUCTURE PREVENT DRILLING IN THE LOCATIONS SHOWN ON THE DRAWINGS.
5. FIELD TESTING: TENSION TEST 25% OF DOWELS IN EACH DIAMETER GROUP TO THE VALUES TABULATED ABOVE. TESTS SHALL BE PERFORMED BY THE OWNER'S TESTING AGENCY. IF ANY DOWEL FAILS, TEST ALL DOWELS NOT PREVIOUSLY TESTED UNTIL 20 CONSECUTIVE PASS. TESTING SHALL OCCUR 7 DAYS MINIMUM AFTER DOWEL INSTALLATION. TEST AND INSPECTION COSTS ASSOCIATED WITH FAILED DOWELS SHALL BE DEDUCTED FROM THE CONTRACT SUM. FULL TIME (100%) INSPECTION MAY BE SUBSTITUTED FOR TESTING.

13 TYPICAL EPOXY GROUTED DOWELS
NO SCALE

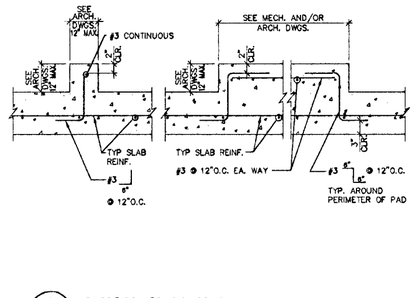

9 TYPICAL CURB AND RAISED PAD DETAILS
NO SCALE

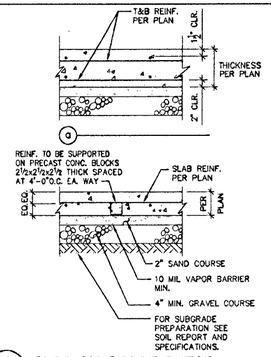

5 SLAB-ON-GRADE DETAIL
NO SCALE

DIAMETER OF BENDS	
D1	1 1/2" FOR #3 BARS 2" FOR #4 BARS 2 1/2" FOR #5 BARS
D2	6d FOR #3 THRU #8 BARS 8d FOR #9, #10 & #11 BARS

"D1" - FOR STIRRUPS, TIES AND WALL REINF. AT OPENINGS
"D2" - FOR ALL OTHERS
d - NOMINAL BAR DIAMETER

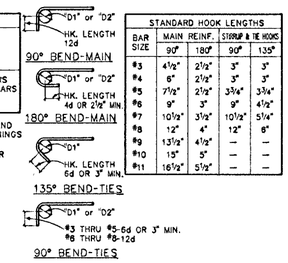

STANDARD HOOK LENGTHS				
BAR SIZE	MAIN REINF. 90°	MAIN REINF. 180°	STIRRUP & TIE HOOKS 90°	STIRRUP & TIE HOOKS 135°
#3	4½"	2½"	3"	3"
#4	6"	2½"	3"	3"
#5	7½"	2½"	3¾"	3¾"
#6	9"	3"	9"	4½"
#7	10½"	3½"	10½"	5¼"
#8	12"	4"	12"	6"
#9	13½"	4½"	—	—
#10	15"	5"	—	—
#11	16½"	5½"	—	—

1 STANDARD HOOKS
NO SCALE

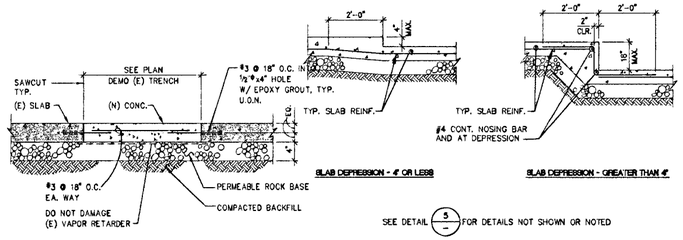

10 SLAB-ON-GRADE DEPRESSION
NO SCALE

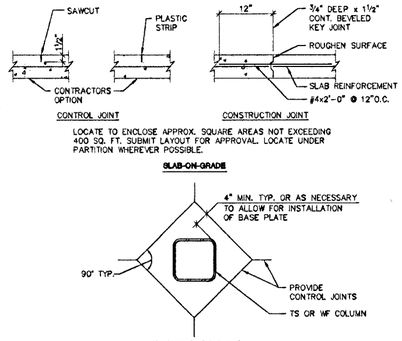

6 SLAB-ON-GRADE CONSTRUCTION AND CONTROL JOINTS
NO SCALE

CONCRETE STRENGTH	F'c = 3000 PSI			
CLASS OF LAP SPLICE	CLASS "A"		CLASS "B"	
BAR SIZE \ CASE	TOP BARS	OTHER BARS	TOP BARS	OTHER BARS
#3	1'-10"	1'-5"	2'-4"	1'-10"
#4	2'-5"	1'-10"	3'-1"	2'-5"
#5	3'-0"	2'-4"	3'-11"	3'-0"
#6	3'-7"	2'-9"	4'-8"	3'-7"
#7	5'-3"	4'-0"	6'-9"	5'-2"
#8	6'-0"	4'-7"	7'-9"	5'-11"
#9	6'-9"	5'-2"	8'-9"	6'-9"

NOTES:
1. UNLESS INDICATED OTHERWISE, USE THE CLASS "B" LAP SPLICE LENGTHS, MULTIPLIED BY THE APPLICABLE FACTOR(S) LISTED BELOW.
2. WHERE CLEAR SPACE BETWEEN BARS LAP SPLICED AT ANY SECTION IS LESS THAN 2 BAR DIAMETERS, OR WHERE THE BAR COVER IS LESS THAN OR EQUAL TO THE BAR DIAMETER, INCREASE THE LAP LENGTH BY 50%.
3. A CLASS "A" SPLICE MAY BE USED ONLY WHERE NOTED ON THE DRAWINGS.
4. TOP BARS ARE HORIZONTAL BARS WITH MORE THAN 12 INCHES OF CONCRETE CAST BELOW THE BARS.
5. SPLICES OF HORIZONTAL REINFORCEMENT IN WALLS SHALL BE STAGGERED.
6. SPLICES IN WALLS CONTAINING TWO CURTAINS OF REINFORCEMENT SHALL NOT OCCUR IN THE SAME LOCATION.

2 REBAR OFFSET AND LAP SPLICE
NOT TO SCALE

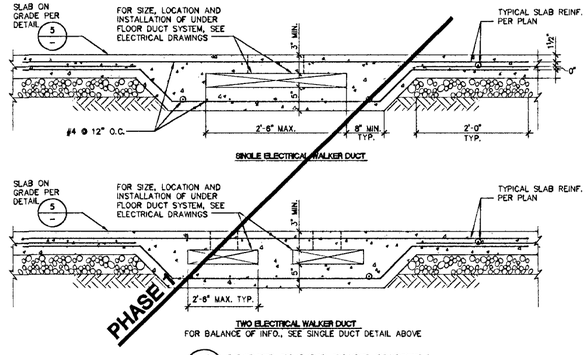

15 UNDER FLOOR DUCT SYSTEM
NO SCALE

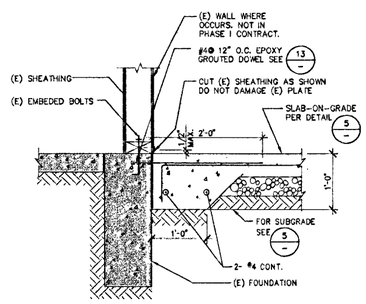

11 CONSTRUCTION JOINTS AT (E) SLAB-ON-GRADE
1"=1'-0"

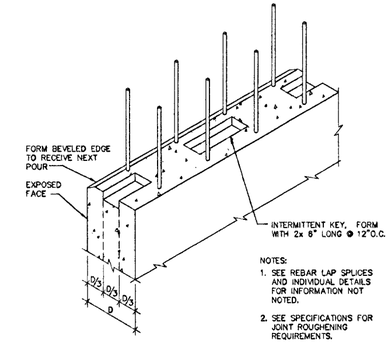

7 HORIZONTAL CONSTRUCTION JOINT IN CONCRETE WALL
NO SCALE

NOTE: CONTRACTOR SHALL BE RESPONSIBLE FOR SHORING OR OTHERWISE MAINTAINING THE SIDES OF THE EXCAVATION FROM CAVE-IN UNTIL ALL BACKFILL IS COMPLETED. BACKFILL PER SPECIFICATIONS.

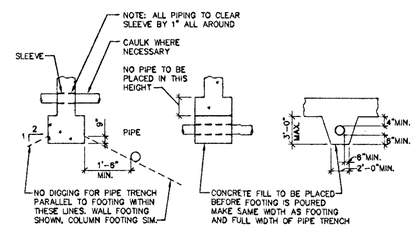

3 PIPE CLEARANCES AT FOOTINGS
NO SCALE

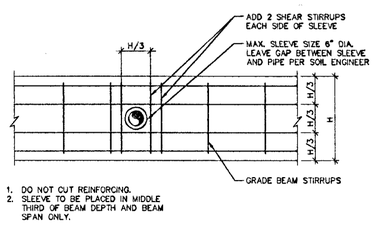

12 SLEEVE THRU GRADE BEAM
NO SCALE

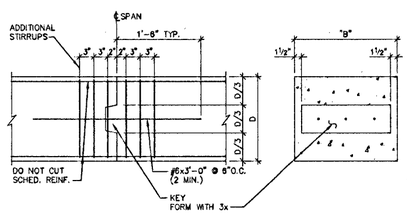

8 GRADE BEAM CONSTRUCTION JOINTS
NO SCALE

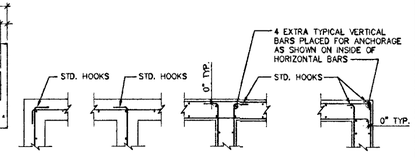

4 FOOTING INTERSECTIONS
NO SCALE

FIELD PAOLI

Architecture
1045 Sansome St.
Suite 206
San Francisco
California, 94111
Tel. 415. 788. 6606
Fax 415. 788. 6650

SARATOGA LIBRARY
SANTA CLARA COUNTY LIBRARY
13650 Saratoga Avenue
Saratoga, California 95070

DASSE DESIGN INC.
STRUCTURAL ENGINEERS
33 New Montgomery St., Suite 850
San Francisco, CA 94105
415/243-6400 - Fax 415/243-6165
REGISTERED PROFESSIONAL ENGINEER WILLIAM A. ANDREWS S 3773 Exp. 3-31-02 STRUCTURAL STATE OF CALIFORNIA

DATE	OCTOBER 26, 2001
REVISIONS	

CONSTRUCTION DOCUMENTS
BID SET

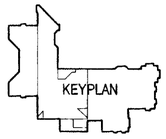

TYPICAL CONCRETE DETAILS

SCALE	AS NOTED
DRAWN BY	SRB
CHECKED BY	SRB
JOB NO.	00B222

PHASE - 2

SHEET NO. S5.1

All drawings and written material appearing herein constitute the original and unpublished work of the architect and the same may not be duplicated, used, or disclosed without the written consent of the architect ©Field Paoli

FILE: E:\00B222\STRUCT\Phase_2\00222S2-S1.dwg07/05/01 at 15:12
XREF: E:\00B222\STRUCT\00222T6.dwg

FOOTING SCHEDULE					
MARK	SIZE B x D x t	REINFORCING TOP	REINFORCING BOTTOM	COMMENTS	REF. DETAIL
F1	2'-6"x2'-6"x1'-6"	–	#6 @ 12" O.C. E.W.	–	7/–
F2	3'-0"x3'-0"x1'-6"	–	DO	–	7/–
F3	4'-0"x4'-0"x1'-6"	–	DO	–	7/–
F4	5'-0"x5'-0"x2'-0"	–	DO	–	7/–
F4A	5'-6"x5'-6"x2'-0"	–	DO	–	7/–
F5	3'-0"x11'-3"x2'-0"	–	DO	–	7/–
F6	3'-0"xDx2'-0"	–	#6 @ 12" O.C. E.W.	SEE PLAN FOR D	7/–
F7	6'-0"x30'-0"x4'-0"	5 # 5 LONG.	7 # 8 LONG.	–	8/–
F8	4'-0"x26'-0"x3'-0"	5 # 5 LONG.	5 # 5 LONG.	–	8/–
F9	4'-0"x25'-0"x3'-0"	5 # 5 LONG.	5 # 5 LONG.	–	8/–
F10	5'-0"xDx3'-0"	5 # 5 LONG.	6 # 5 LONG.	SEE PLAN FOR D	8/–
F11	4'-0"xDx3'-0"	5 # 5 LONG.	8 # 8 LONG.	SEE PLAN FOR D	8/–
F12	4'-0"x25'-0"x3'-0"	5 # 5 LONG.	5 # 8 LONG.	–	8/–
F13	2'-6"xDx1'-8"	–	#6 @ 12" O.C. E.W.	SEE PLAN FOR D	7/–

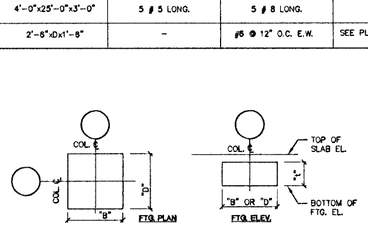

10/– FOOTING SCHEDULE

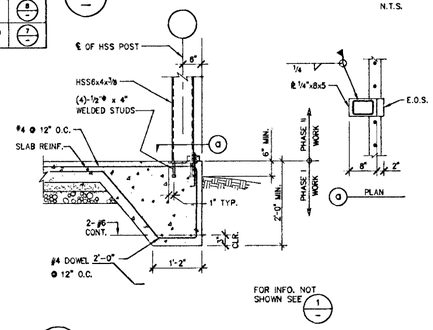

6/– THICKENED SLAB DETAIL

N.T.S.

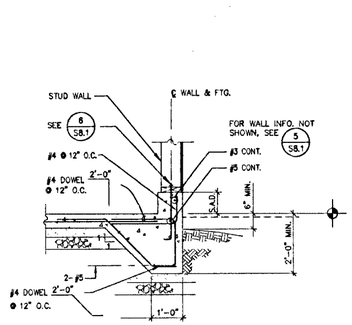

5/– SECTION

N.T.S.

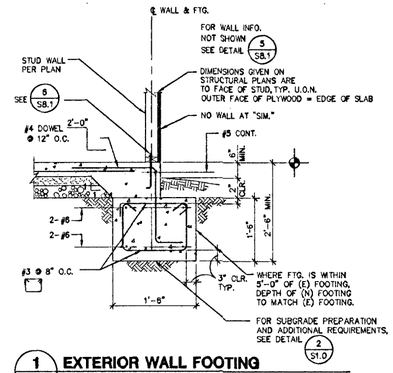

1/– EXTERIOR WALL FOOTING

N.T.S.

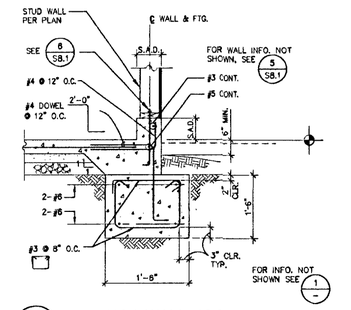

2/– EXTERIOR WALL FOOTING W/ CURB

N.T.S.

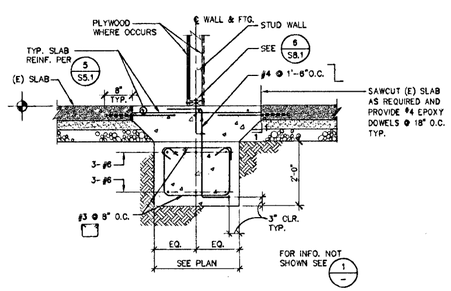

19/– INTERIOR WALL FOOTING

N.T.S.

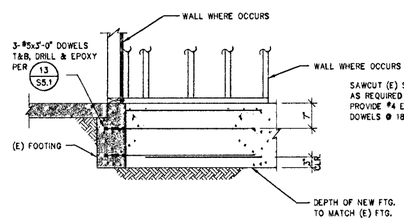

11/– (N) FTG. ADJACENT TO (E) FTG. DETAIL

N.T.S.

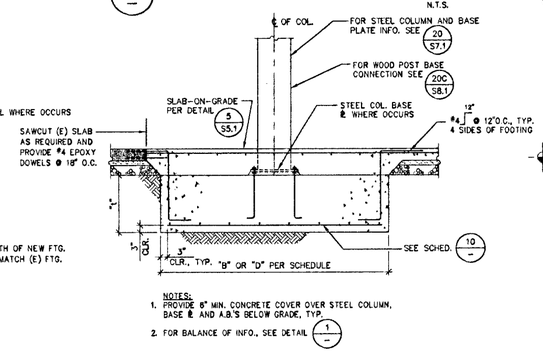

7/– COLUMN FOOTING DETAIL

N.T.S.

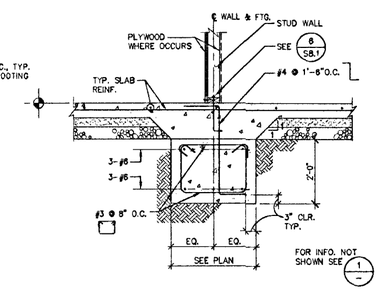

3/– INTERIOR WALL FOOTING

N.T.S.

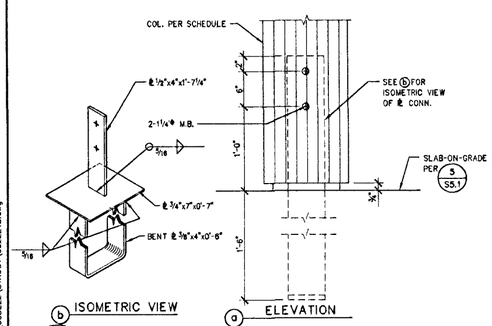

20/– COLUMN BASE DETAIL

N.T.S.

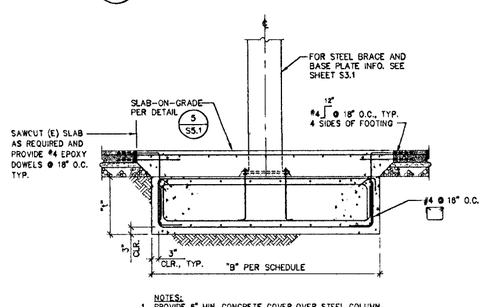

12/– SECTION

N.T.S.

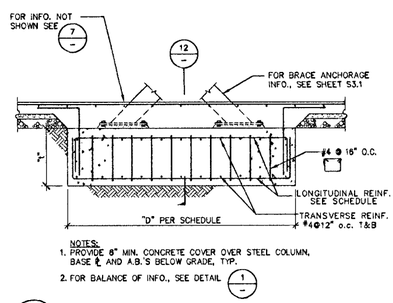

8/– BRACED FRAME FTG. DETAIL

N.T.S.

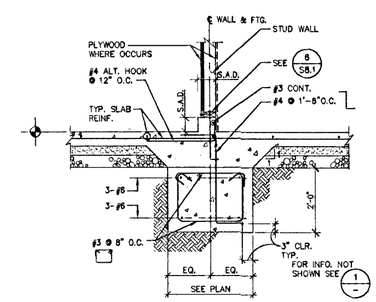

4/– INTERIOR WALL FOOTING W/ CURB

N.T.S.

FILE: E:\00B222\STRUCT\Phase_2\00222S2-S2.dwg09/19/01 at 15:11
XREF: E:\00B222\STRUCT\00222TB.dwg

FIELD PAOLI

Architecture
1045 Sansome St.
Suite 206
San Francisco
California, 94111
Tel. 415. 788. 6606
Fax 415. 788. 6650

SARATOGA LIBRARY

SANTA CLARA COUNTY LIBRARY

13650 Saratoga Avenue
Saratoga, California 95070

DASSE DESIGN INC.
STRUCTURAL ENGINEERS
33 New Montgomery St., Suite 850
San Francisco CA 94105
415/243-0400 – Fax 415/243-0188

REGISTERED PROFESSIONAL ENGINEER
WILLIAM A. ANDREWS
S 3773
Exp. 3-31-02
STRUCTURAL
STATE OF CALIFORNIA

DATE	OCTOBER 26, 2001
REVISIONS	

CONSTRUCTION DOCUMENTS
BID SET

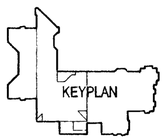

TYPICAL FOUNDATION DETAILS

SCALE	AS NOTED
DRAWN BY	SRB
CHECKED BY	SRB
JOB NO.	00B222

PHASE - 2

SHEET NO. S5.2

All drawings and written material appearing herein constitute the original and unpublished work of the architect and the same may not be duplicated, used, or disclosed without the written consent of the architect ©Field Paoli

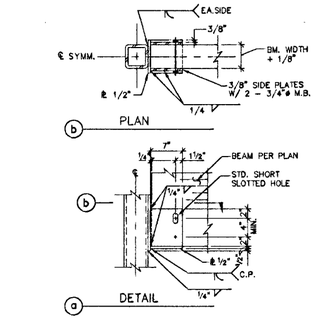

17 BEAM TO HSS COLUMN CONNECTION

1"=1'-0"

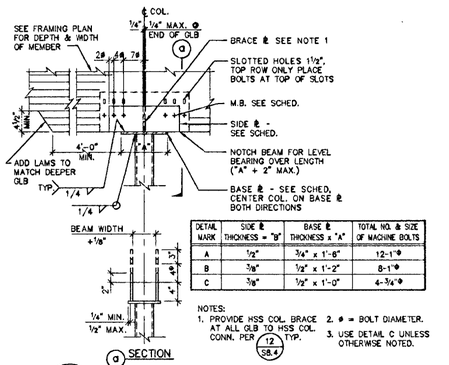

DETAIL MARK	SIDE ℄ THICKNESS = "B"	BASE ℄ THICKNESS x "A"	TOTAL NO. & SIZE OF MACHINE BOLTS
A	1/2"	3/4" x 1'-6"	12-1"ϕ
B	3/8"	1/2" x 1'-2"	8-1"ϕ
C	3/8"	1/2" x 1'-0"	4-3/4"ϕ

NOTES:
1. PROVIDE HSS COL. BRACE AT ALL GLB TO HSS COL. CONN. PER (12/S8.4) TYP.
2. ϕ = BOLT DIAMETER.
3. USE DETAIL C UNLESS OTHERWISE NOTED.

13 GLB TO HSS COLUMN CONNECTION

DEPTH OR SIZE OF BEAM	NO. OF BOLTS (2) 7/8"ϕ A325SC U.O.N.	SHEAR PLATE	WELD (1) SIZE
8",10",C8	2	1/4"	1/4"
12",14", C12, MC12	3	3/8"	5/16"
16"	4	3/8"	5/16"
18"	5	3/8"	5/16"
21"	6	3/8"	5/16"
24"	7	1/2"	5/16"
27"	8	5/8"	5/16"
30"	8	5/8"	5/16"
33"	9	5/8"	5/16"
36"	10	3/4"	5/16"
40"	11	3/4"	5/16"

NOTES:
(1) USE COMPLETE PENETRATION WELDS AT ALL SKEWED CONNECTIONS WHERE AISC PRE-QUALIFIED FILLET WELDS ARE NOT POSSIBLE
(2) USE 1"ϕ A325SC BOLT WHERE DENOTED ON FRAMING PLANS THUS: (1)
(3) MARKS → ON PLANS DENOTE WELDED SHEAR TABS

9 BEAM CONNECTION SCHEDULE

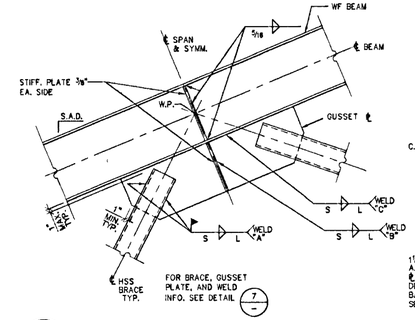

5 HSS BRACE CONNECTION TO WF BEAM AT MIDSPAN

3/4"=1'-0"

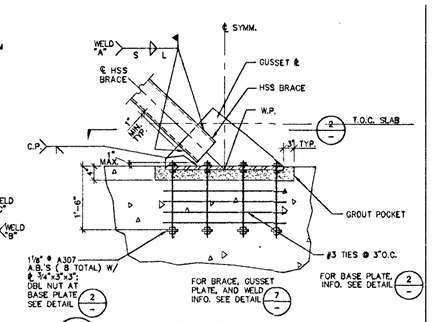

1 HSS BRACE ANCHORAGE AT MIDSPAN

3/4"=1'-0"

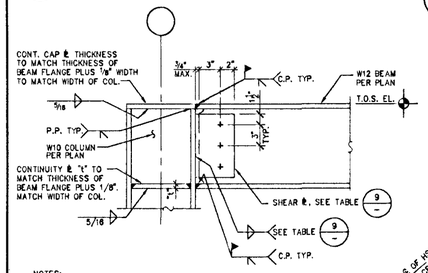

18 BEAM TO COLUMN FLANGE MOMENT CONNECTION

1 1/2"=1'-0"

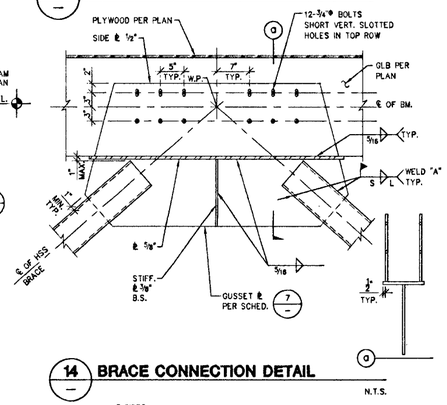

14 BRACE CONNECTION DETAIL

N.T.S.

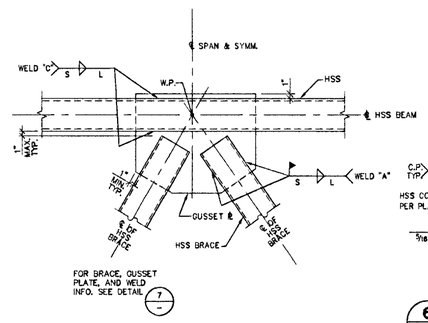

10 HSS BRACE CONNECTION TO HSS BEAM AT MID SPAN

1"=1'-0"

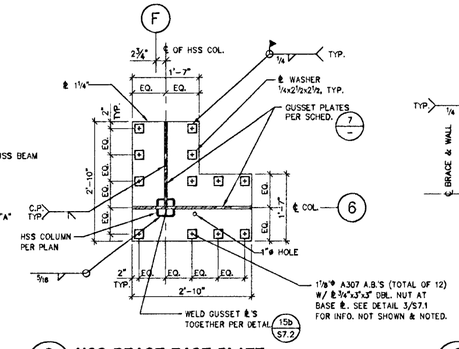

6 HSS BRACE BASE PLATE

3/4"=1'-0"

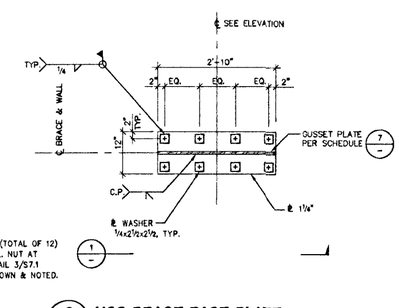

2 HSS BRACE BASE PLATE

3/4"=1'-0"

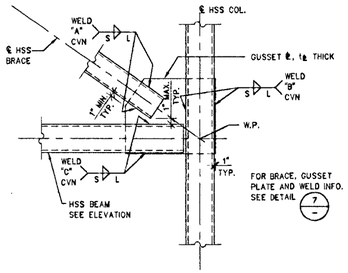

19 HSS BRACE CONNECTION

1"=1'-0"

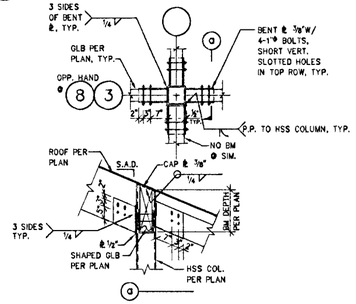

15 CONNECTION DETAIL

1/2"=1'-0"

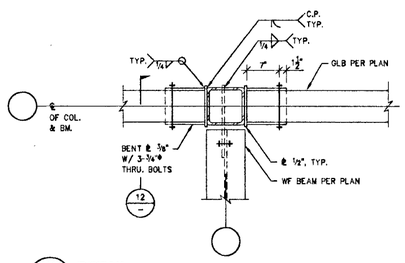

11 DETAIL

1"=1'-0"

BRACE TYPE	GUSSET & THICKNESS "t℄"	WELD "A"		WELD "B"		WELD "C"	
		S	L	S	L	S	L
HSS 5½x5½x5/16	3/8"	5/16	8	5/16	10	5/16	10
HSS 7x7x5/16	1/2"	5/16	10	5/16	12	5/16	12

NOTES: 1. WELD LENGTHS NOTED IN SCHEDULE ARE MINIMUM LENGTHS TO BE WELDED ON BOTH SIDES OF GUSSET PLATE.
2. SLOT HSS BRACE AT CENTER FOR GUSSET PLATE WITH 1" LONG MAXIMUM OVERSLOT.

7 BRACED FRAME SCHEDULE

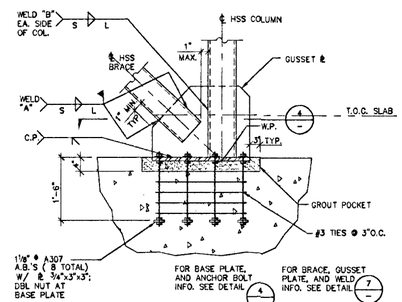

3 HSS BRACE ANCHORAGE AT HSS COLUMN

3/4"=1'-0"

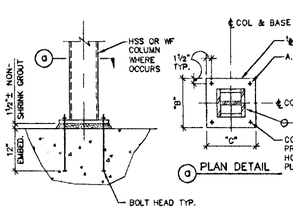

NOTE:
FOR ℄'S B, C AND COL. INFO. SEE COL. SCHEDULE

20 COLUMN BASE PLATE

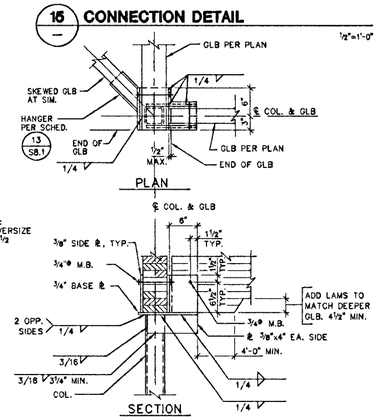

16 GLB TO HSS COLUMN CONNECTION

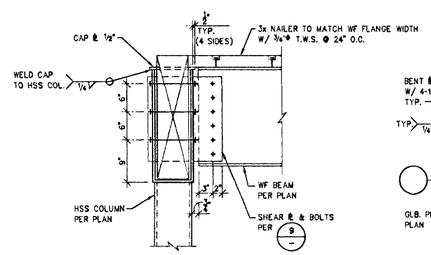

12 SECTION

1"=1'-0"

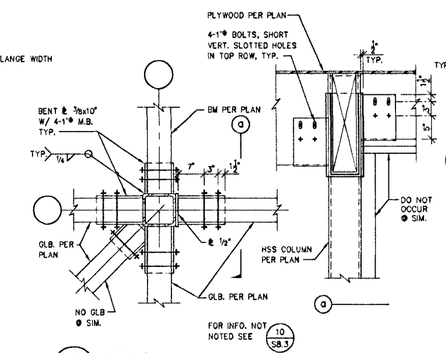

8 DETAIL

1"=1'-0"

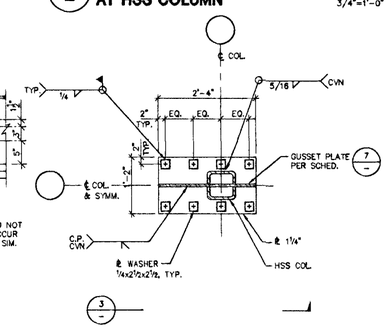

4 HSS BRACE BASE PLATE AT HSS COLUMN

3/4"=1'-0"

FILE: E:\008222\STRUCT\Phase_2\0022252-71.dwg10/12/01 at 10:12
XREF: E:\008222\STRUCT\G022218.dwg

FIELD PAOLI

Architecture
1045 Sansome St.
Suite 206
San Francisco
California, 94111
Tel. 415. 788. 6606
Fax 415. 788. 6650

SARATOGA LIBRARY

SANTA CLARA COUNTY LIBRARY

13650 Saratoga Avenue
Saratoga, California 95070

DASSE DESIGN INC.
STRUCTURAL ENGINEERS
33 New Montgomery St., Suite 650
San Francisco CA 94105
415/243-9400 - Fax 415/243-9169
REGISTERED PROFESSIONAL ENGINEER WILLIAM A. ANDREWS S 3773 Exp. 3-31-02 STRUCTURAL STATE OF CALIFORNIA

DATE	OCTOBER 28, 2001
REVISIONS	

CONSTRUCTION DOCUMENTS
BID SET

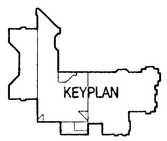

TYPICAL STEEL DETAILS

SCALE	AS NOTED
DRAWN BY	SRB
CHECKED BY	SRB
JOB NO.	008222

PHASE - 2

SHEET NO. S7.1

All drawings and written material appearing herein constitute the original and unpublished work of the architect and the same may not be duplicated, used, or disclosed without the written consent of the architect ©Field Paoli

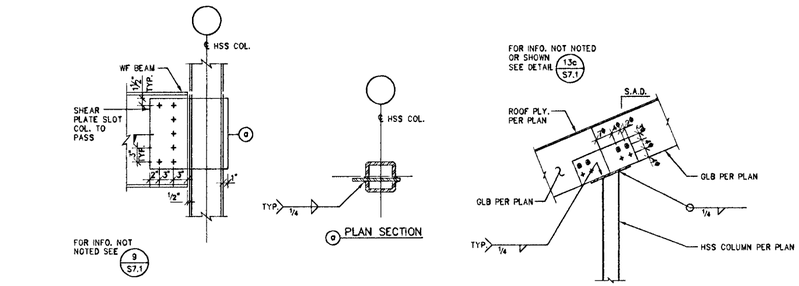

13/– WF BEAM TO HSS COLUMN CONNECTION 1/2"=1'-0"

9/– GLB TO HSS COLUMN CONNECTION 1/2"=1'-0"

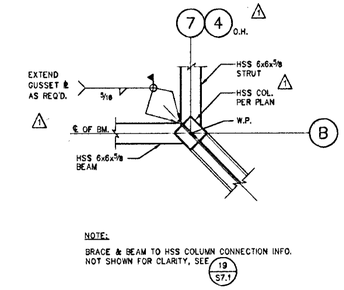

5/– HSS BEAM TO SKEWED HSS COLUMN CONNECTION DETAIL 3/4"=1'-0"

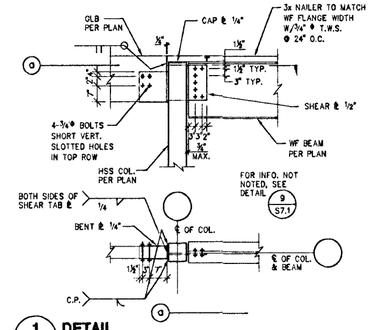

1/– DETAIL 1"=1'-0"

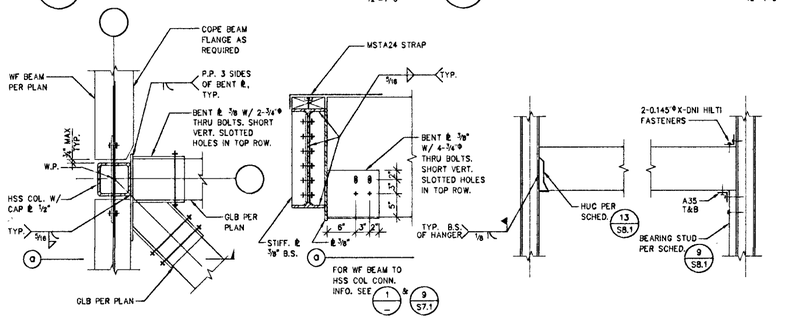

14/– BEAM TO HSS COLUMN CONNECTION DETAIL 1"=1'-0"

10/– TYPICAL WOOD HEADER TO HSS POST 1"=1'-0"

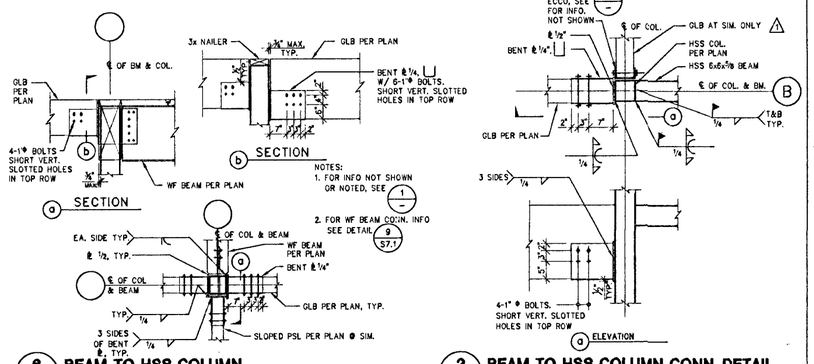

6/– BEAM TO HSS COLUMN CONNECTION DETAIL 1/2"=1'-0"

2/– BEAM TO HSS COLUMN CONN. DETAIL 3/4"=1'-0"

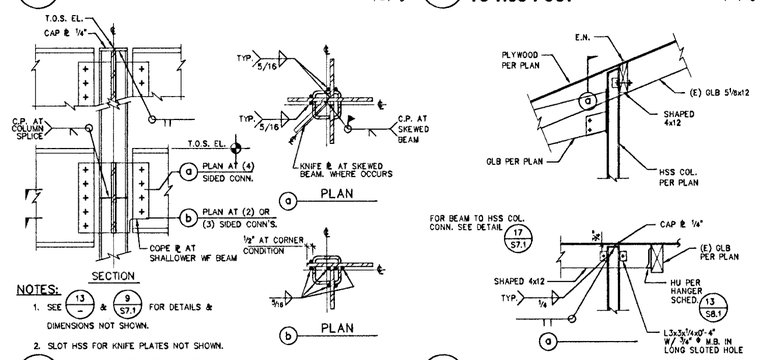

16/– BEAM TO HSS COLUMN CONNECTION

11/– DETAIL 1/2"=1'-0"

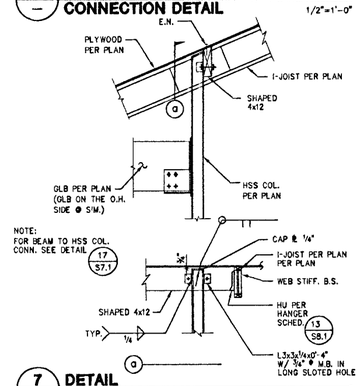

7/– DETAIL 1/2"=1'-0"

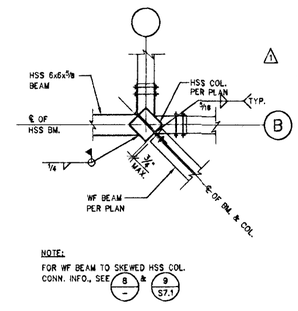

3/– BEAM TO SKEWED HSS COLUMN CONNECTION DETAIL 3/4"=1'-0"

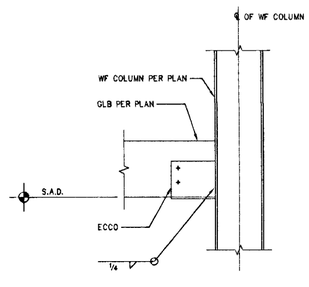

18/– GLB TO WF COLUMN CONNECTION DETAIL 1"=1'-0"

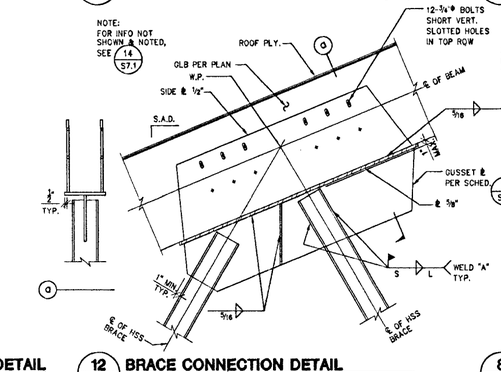

12/– BRACE CONNECTION DETAIL 1"=1'-0"

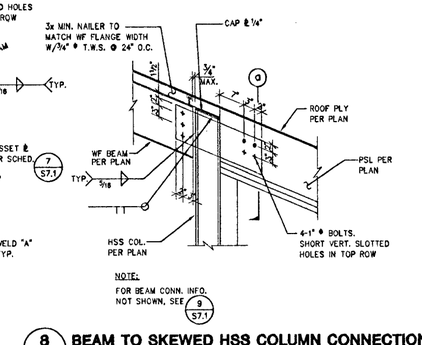

8/– BEAM TO SKEWED HSS COLUMN CONNECTION DETAIL 3/4"=1'-0"

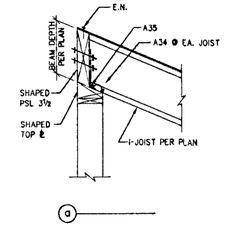

FIELD PAOLI

Architecture
1045 Sansome St.
Suite 206
San Francisco
California, 94111
Tel. 415. 788. 6606
Fax 415. 788. 6650

SARATOGA LIBRARY

SANTA CLARA COUNTY LIBRARY

13650 Saratoga Avenue
Saratoga, California 95070

DASSE DESIGN INC.
STRUCTURAL ENGINEERS
33 New Montgomery St., Suite 850
San Francisco, CA 94105
415/243-8400 – Fax 415/243-9165

REGISTERED PROFESSIONAL ENGINEER WILLIAM A. ANDREWS S 3773 Exp. 3-31-02 STRUCTURAL STATE OF CALIFORNIA

DATE	JANUARY 25, 2002

REVISIONS
CONSTRUCTION DOCUMENTS
BID SET 10/26/01
1 ADDENDUM 1 11/20/01
CONFORM SET RE-PLOT

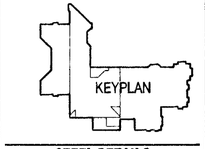

STEEL DETAILS

SCALE	AS NOTED
DRAWN BY	SRB
CHECKED BY	SRB
JOB NO.	00B222

PHASE - 2

SHEET NO. **S7.2**

All drawings and written material appearing herein constitute the original and unpublished work of the architect and the same may not be duplicated, used, or disclosed without the written consent of the architect ©Field Paoli

FILE: E:\00B222\STRUCT\Phase 2\00222S2-72.dwg01/25/02 at 11:38
XREF: E:\00B222\STRUCT\00222TB.dwg

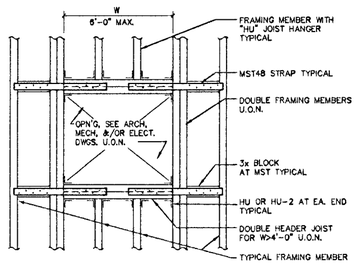

17 OPENING IN FRAMING

MEMBER	SIMPSON DESIGNATION
2x6	U26
2x8	U26
2x10	U210
2-2x10	U210-2
2x12	U210
3x6	U36
3x8	U36
4x6	W46
4x8	B46
4x10	B410
4x12	HU412
14" TJI/H90	MIU414 (@ FLAT AREAS) LSSU410 (SLOPED & SKEWED)
GLB 3⅞	HGLT3, LEG3
GLB 5⅛	HGLT5, EG5
GLB 6¾	HGLT7, EG7
GLB 8¾	HGLT9, EG9
PSL 1¾	HU14
PSL 3½	HU416
PSL 5¼	HU5.31/14

NOTES:
1. INSTALL PER MANUFACTURER'S INSTRUCTIONS. FILL ALL HOLES WITH FASTENERS SPECIFIED.
2. USE SKEWED AND/OR SLOPED HANGERS AS REQ'D.
3. HANGERS ARE TYP. U.O.N. IN DRAWINGS.

13 HANGER SCHEDULE

OPENING WIDTH "W" MIN.	"D" U.O.N.	NO. OF BEARING STUDS REQ'D.	NO. OF KING STUDS REQ'D.
W ≤ 5'-0"	7 1/4"	1	1
5'-0" ≤ W ≤ 7'-0"	9 1/4"	2	2
7'-0" ≤ 10'-0"	11 1/4"	2	3
W > 10'-0"	SEE PLANS	4	3

NOTES:
1. SIZE DOOR AND WINDOW HEADERS PER ABOVE SCHEDULE U.O.N. ON PLANS.
2. AT HD, USE POST PER (4) IN LIEU OF KING STUDS. ADD KING STUD TO HD POST IF REQUIRED, SO THAT WIDTH OF STUD & POST IS AT LEAST THE WIDTH OF KING STUDS REQUIRED PER SCHEDULE.

9 HEADER SCHEDULE

SHEAR WALL SCHEDULE

SHEARWALL SYMBOL (1)(2)	SOLE PL NAILING/BOLTING (SOLE PL NAILING OR BOLTING, SHEARWALL, E.N., BLK'G OR JOIST)	SHEAR CLIP (SHEARWALL, E.N., A35, E.N., A35F (5))	ANCHOR BOLT (ANCHOR BOLT (6), SHEARWALL, SILL, ℄ OF SILL ℄)	SHEAR CLIP (A35 CLIP, E.N., RAFTER OR BLK'G, SHEARWALL)	SILL ℄
◇	16d @ 4" O.C.	A35 @ 16" O.C.	¾"Φ @ 4'-0" O.C.	A35 @ 16" O.C.	2x
◇	16d @ 3" O.C.	A35 @ 12" O.C.	¾"Φ @ 2'-8" O.C.	A35 @ 12" O.C.	3x
◇(4)	20d @ 3"O.C. (7)	A35 @ 8" O.C.	¾"Φ @ 2'-0" O.C.	A35 @ 8" O.C.	3x
◇(4)	20d @ 3"O.C. (7)	A35 @ 8" O.C.	¾"Φ @ 1'-6" O.C.	A35 @ 6" O.C.	3x
◇◇(3)	½"Φ x 7" LAG BOLT @ 8" O.C. (7)	A35 @ 12" O.C. EACH SIDE	¾"Φ @ 1'-4" O.C.	A35 @ 12" O.C. EACH SIDE	3x
◇◇(3)(4)	½"Φ x 7" LAG BOLT @ 8" O.C. (7)	A35 @ 8" O.C. EACH SIDE	¾"Φ @ 1'-0" O.C.	A35 @ 8" O.C. EACH SIDE	3x

NOTES:
1. USE 10d SHORTS (2⅞" LONG) COMMON WIRE NAILS U.O.N. USE HOT DIP GALV. NAILS AT P.T. SILLS.
2. ◇ NUMBER SHOWN IN SYMBOL REPRESENTS PLYWOOD PANEL EDGE NAILING IN INCHES.
3. ◇◇ DENOTES PLYWOOD ON BOTH SIDES OF WALL. PANEL JOINTS SHALL BE OFFSET TO FALL ON DIFFERENT FRAMING MEMBERS AND NAILS ON EACH SIDE MUST BE STAGGERED.
4. PROVIDE MINIMUM 3x FRAMING MEMBERS.
5. USE A35F AS ALTERNATE TO A35 U.O.N.
6. SEE DETAIL (1) FOR ANCHOR BOLT AND SILL DETAIL.
7. PILOT DRILL HOLES FOR SOLE PLATE NAILING OR BOLTING.

5 SHEAR WALL SCHEDULE

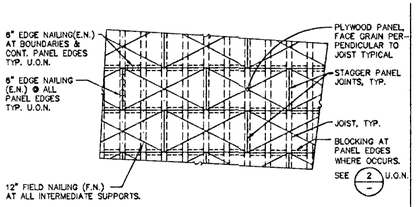

NOTES
1. USE 10d COMMON NAILS AT ROOFS.
2. MINIMUM PLYWOOD WIDTH IS 24".
3. SEE GENERAL NOTES FOR PLYWOOD THICKNESS & GRADE.

1 PLYWOOD SHEATHING AT ROOF

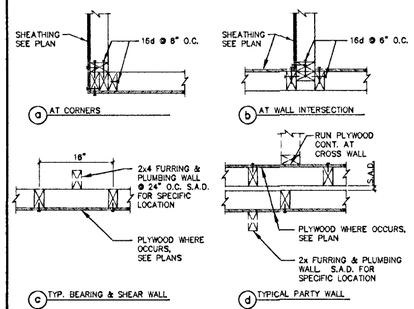

18 STUD CONFIGURATIONS

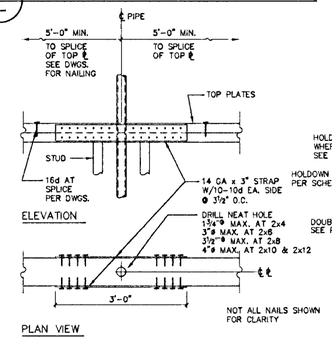

13 HANGER SCHEDULE

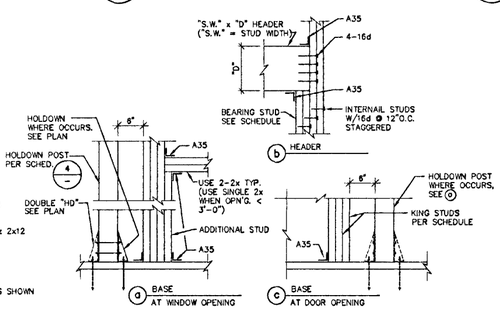

9 HEADER SCHEDULE

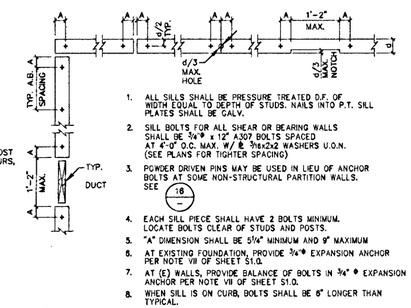

6 ANCHOR BOLT AND SILL PLATE

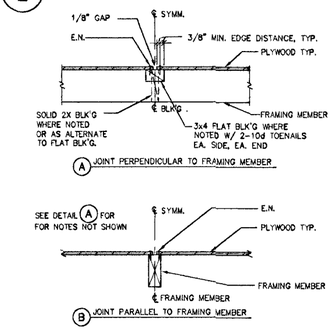

2 PLYWOOD NAILING

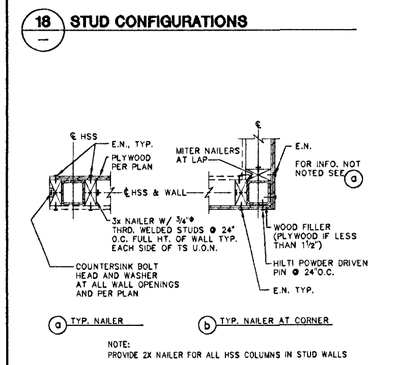

19 NAILER AT HSS COLUMN

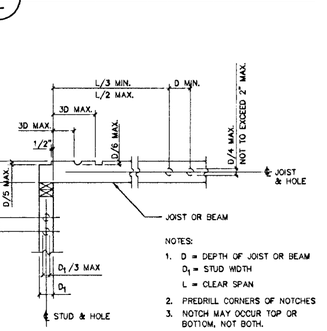

14 PLUMBING PENETRATIONS AT WALL

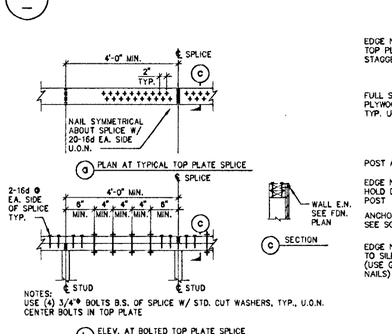

10 WALL OPENING

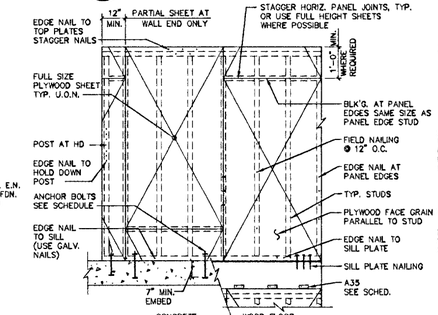

7 SHEAR WALL FRAMING ELEVATION

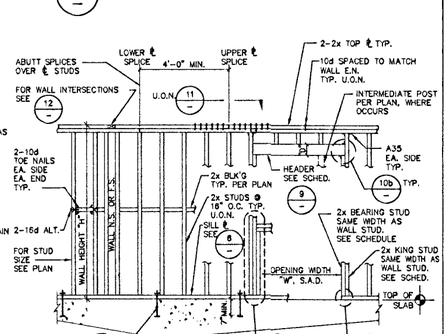

3 STRUCTURAL WALL FRAMING

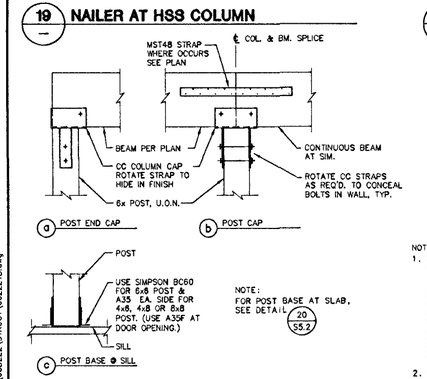

20 BEAM AND POST CONNECTION

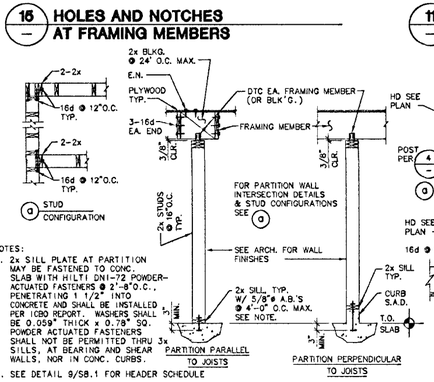

16 NON-STRUCTURAL PARTITION

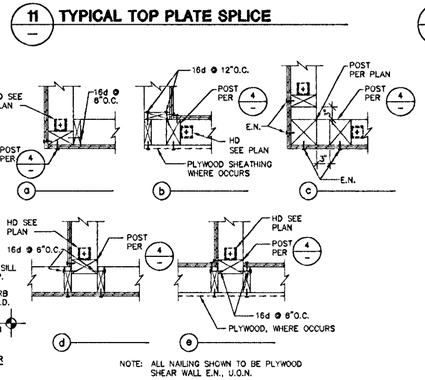

11 TYPICAL TOP PLATE SPLICE

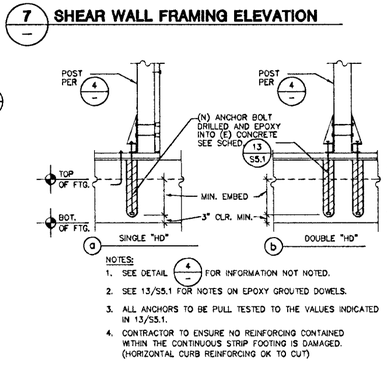

8 (N) HOLDOWN INTO (E) FOUNDATION

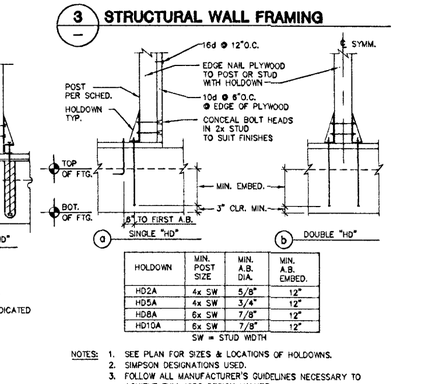

HOLDOWN	MIN. POST SIZE	MIN. A.B. DIA.	MIN. A.B. EMBED.
HD2A	4x SW	5/8"	12"
HD5A	4x SW	3/4"	12"
HD8A	6x SW	7/8"	12"
HD10A	6x SW	7/8"	12"

SW = STUD WIDTH

NOTES:
1. SEE PLAN FOR SIZES & LOCATIONS OF HOLDOWNS.
2. SIMPSON DESIGNATIONS USED.
3. FOLLOW ALL MANUFACTURER'S GUIDELINES NECESSARY TO ACHIEVE FULL ICBO DESIGN VALUES.

4 HOLDOWN AT FOUNDATION

FIELD PAOLI

Architecture
1045 Sansome St.
Suite 206
San Francisco
California, 94111
Tel. 415. 788. 6606
Fax 415. 788. 6650

SARATOGA LIBRARY
SANTA CLARA COUNTY LIBRARY
13650 Saratoga Avenue
Saratoga, California 95070

DASSE DESIGN INC.
STRUCTURAL ENGINEERS
33 New Montgomery St., Suite 550
San Francisco, CA 94105
415/243-9400 - Fax 415/243-9188
REGISTERED PROFESSIONAL ENGINEER WILLIAM A. ANDREWS S 3773 Exp. 3-31-02 STRUCTURAL STATE OF CALIFORNIA

DATE	OCTOBER 28, 2001

REVISIONS

CONSTRUCTION DOCUMENTS
BID SET

KEYPLAN

TYPICAL WOOD DETAILS

SCALE	AS NOTED
DRAWN BY	SRB
CHECKED BY	SRB
JOB NO.	00B222

PHASE - 2

SHEET NO. S8.1

All drawings and written material appearing herein constitute the original and unpublished work of the architect and the same may not be duplicated, used, or disclosed without the written consent of the architect ©Field Paoli

FILE: E:\00B222\STRUCT\Phase_2\00222S2-B1.dwg06/14/01 at 16:45
XREF: E:\00B222\STRUCT\00222TB.dwg

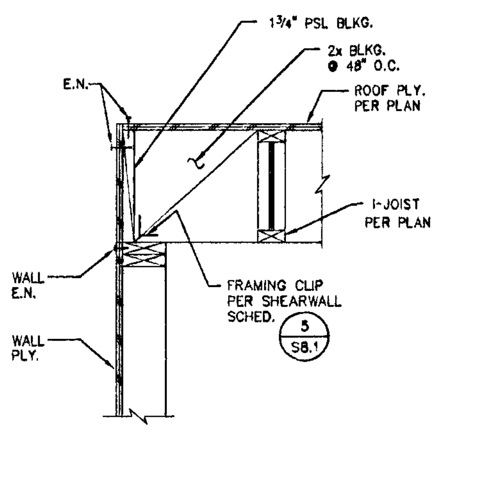

17 DETAIL 1"=1'-0"

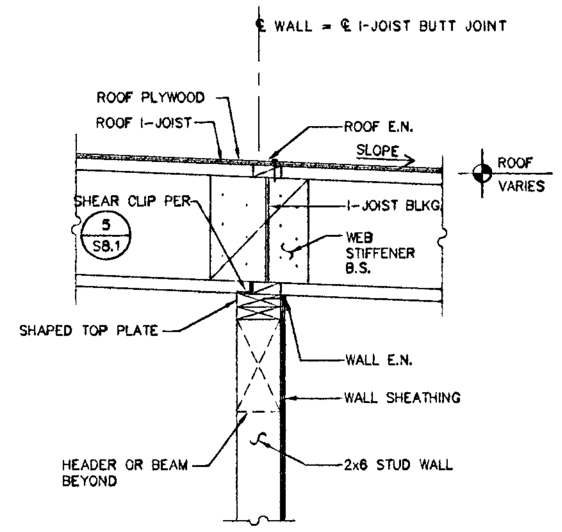

13 SECTION 1"=1'-0"

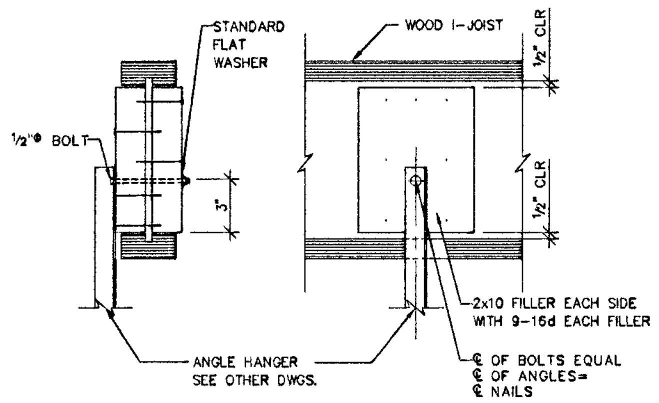

9 TYPICAL HANGER FROM I-JOIST 200 LB. MAX N.T.S.

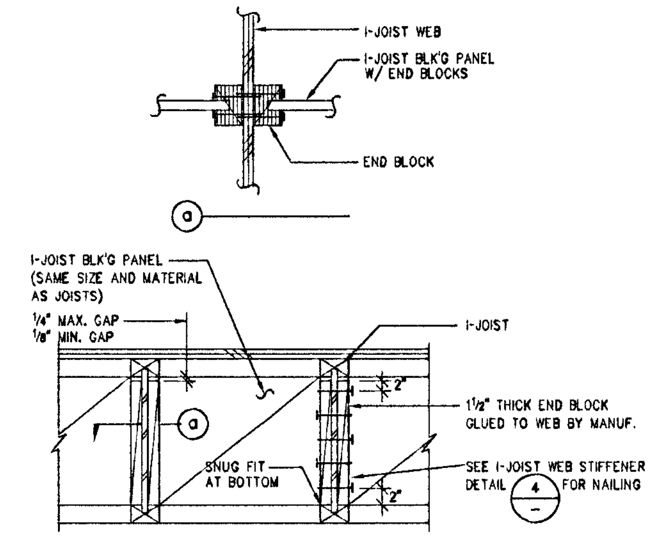

5 I - JOIST BLOCKING N.T.S.

PRE-FABRICATED WOOD I-JOIST NOTES

1. WOOD I-JOISTS SHALL BE PREFABRICATED BY A MANUFACTURER WITH A MINIMUM OF 5 YEARS EXPERIENCE PERFORMING SIMILAR WORK. DESIGN, FABRICATION, AND TESTING SHALL COMPLY WITH ASTM D5055-90, "STRUCTURAL CAPACITIES OF PREFABRICATED WOOD I-JOISTS".
2. I-JOIST MANUFACTURER SHALL RETAIN A CIVIL ENGINEER LICENSED IN THE STATE OF CALIFORNIA TO DESIGN AND DIRECT THE FABRICATION AND ERECTION OF THE JOISTS.
3. PRIOR TO FABRICATION OF I-JOISTS, THE FOLLOWING MATERIAL BEARING THE APPROVAL OF THE MANUFACTURER'S ENGINEER MUST BE SUBMITTED TO THE ARCHITECT AND BUILDING OFFICIAL FOR REVIEW.

   A. SHOP DRAWINGS CLEARLY DELINEATING LAYOUT, BRIDGING REQUIREMENTS, JOIST MEMBER SIZES (INCLUDING GRADE AND SPECIES OF LUMBER USED), ELEVATION OF TAPERED JOISTS (IF ANY), WEB OPENINGS, CONNECTION DETAILS, AND BEARING DETAILS.

   B. STRUCTURAL CALCULATIONS STAMPED BY MANUFACTURER'S ENGINEER WHICH SHOW MEMBER STRESSES AND ANALYSIS AND DESIGN OF SUPPORT AND JOINT CONNECTIONS.
4. WOOD I-JOISTS SHALL BE DESIGNED IN ACCORDANCE WITH THE "1997 UBC".
5. IN ADDITION TO LOADS SHOWN ON PLANS AND/OR DETAILS, WOOD I-JOISTS SHALL BE DESIGNED TO WITHSTAND THE FOLLOWING:

   UNIFORM ROOF LOADS: DEAD LOAD: 19 PSF
   LIVE LOAD: 20 PSF (REDUCIBLE PER UBC)

   CONCENTRATED LOADS: ALL JOISTS SHALL BE DESIGNED TO WITHSTAND A 200 LB DEAD LOAD ACTING AT ANY LOCATION ALONG THE SPAN OF THE JOIST ACTING SIMULTANEOUSLY WITH THE LOADS SHOWN ABOVE.
6. LIMIT DEAD PLUS LIVE LOAD DEFLECTION TO L/180 AND LIMIT LIVE LOAD DEFLECTION TO L/240, WHERE "L" IS THE CLEARSPAN OF JOIST.

   WHERE DEAD LOAD DEFLECTION IS GREATER THAN 0.5", PROVIDE CAMBER EQUAL TO 1.5x DEAD LOAD DEFLECTION. DO NOT CAMBER CANTILEVER AND MULTIPLE SPAN JOISTS.
7. CONTRACTOR SHALL INSTALL ERECTION BRACING PER JOIST MANUFACTURER'S REQUIREMENTS.
8. PROVIDE ALL BLOCKING, STIFFENERS, LATERAL AND DIAGONAL BRACING, CLIPS, AND ANCHORS AS DETAILED IN THESE DRAWINGS. DO NOT CUT, MODIFY, OR DRILL I-JOISTS EXCEPT AS DETAILED IN THE STRUCTURAL DRAWINGS.
9. CONTRACTOR SHALL COORDINATE ALL PLUMBING, ELECTRICAL, MECHANICAL, FIRE PROTECTION, AND OTHER EQUIPMENT REQUIRED BY OTHER TRADES. CONFLICTS WITH JOIST STRUCTURAL REQUIREMENTS SHALL BE BROUGHT TO THE IMMEDIATE ATTENTION OF THE ARCHITECT.
10. PROVIDE MINIMUM BEARING OF 1-3/4" AT JOIST ENDS AND 3-1/2" AT INTERMEDIATE SUPPORTS, U.O.N. ON STRUCTURAL DRAWINGS. NAIL JOISTS AT BEARING WITH 2-8d NAILS (ONE EACH SIDE), 1-1/2" MINIMUM FROM END TO AVOID SPLITTING.

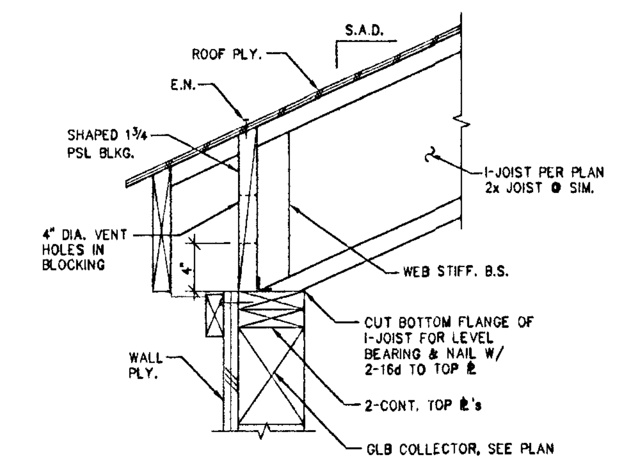

18 TYPICAL EAVE DETAIL 1½"=1'-0"

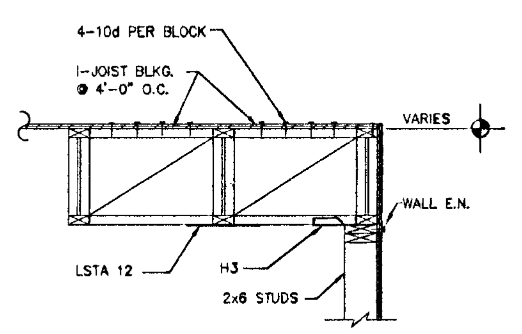

14 SECTION 3/4"=1'-0"

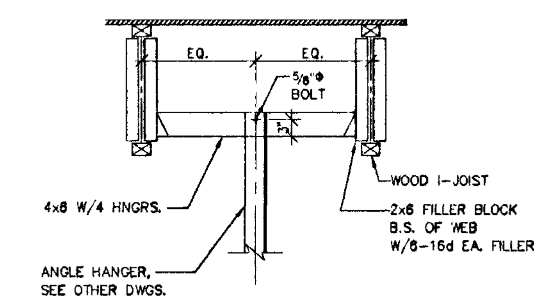

10 HANGER BETWEEN I-JOISTS 400 LB. MAX. N.T.S.

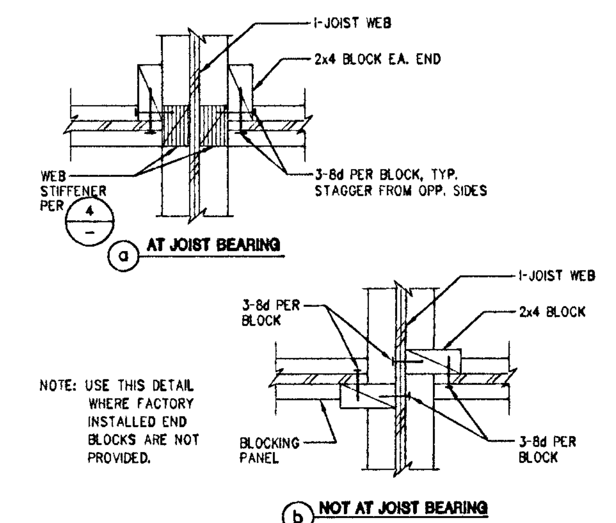

6 ALTERNATE I -JOIST BLOCKING N.T.S.

2 WOOD I-JOIST NOTES

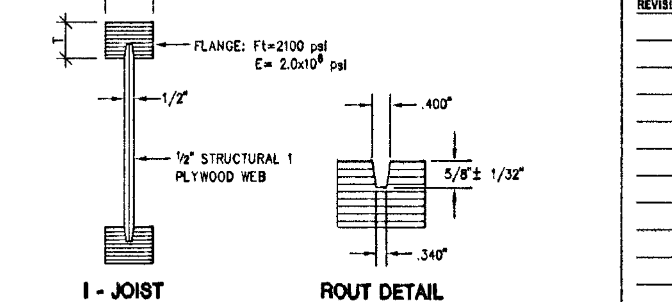

I - JOIST SECTION PROPERTIES				
JOIST TYPE	T x B FLANGE	EI (joist) 10^6 lbs.in.^{2}	M allow.	V allow.
14" TJI/H90	1½"x3½"	1100	11,975 ft.lbs.	2125 lbs.

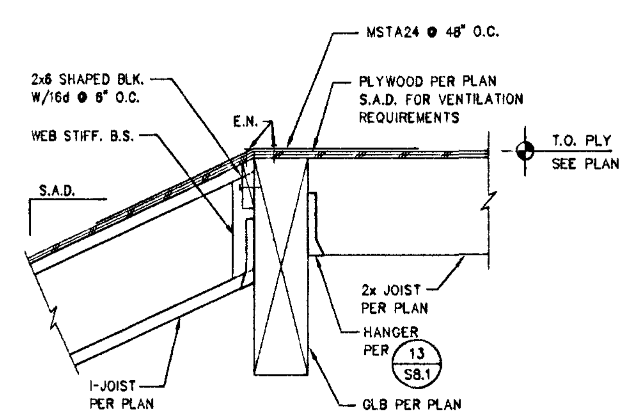

19 DETAIL 1"=1'-0"

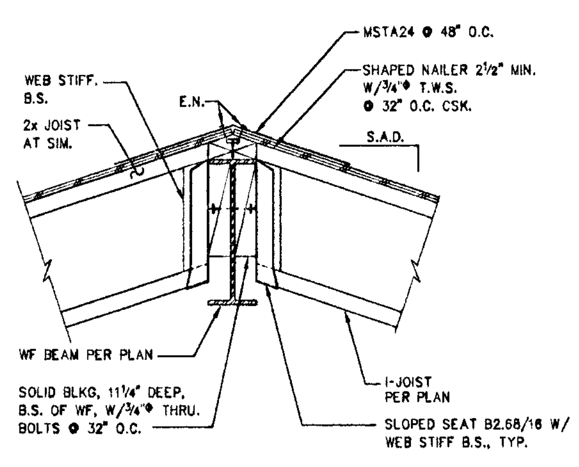

15 RIDGE BEAM 1"=1'-0"

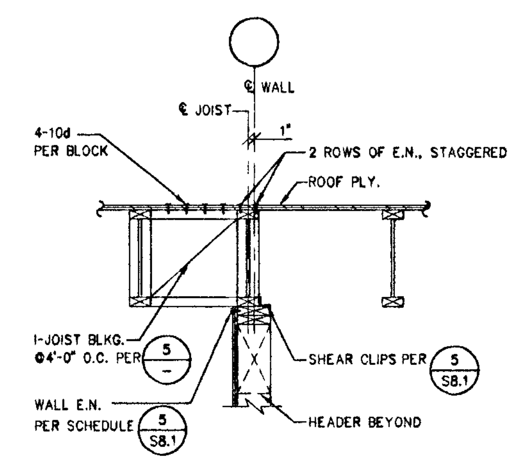

11 I-JOIST PARALLEL TO SHEAR WALL 3/4"=1'-0"

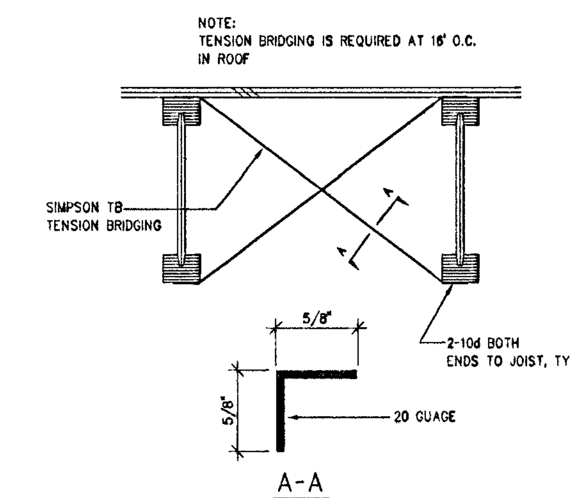

7 I - JOIST BRIDGING N.T.S.

3 WOOD I-JOIST SCHEDULE N.T.S.

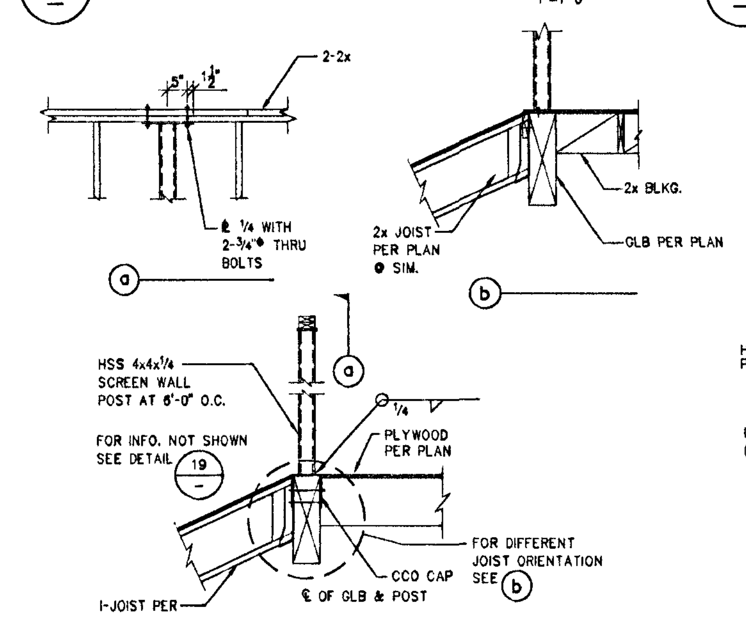

20 SCREEN WALL POST DETAIL ½"=1'-0"

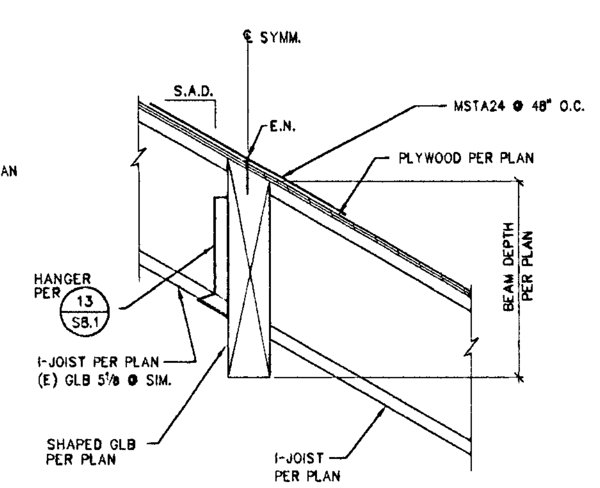

16 DETAIL 1"=1'-0"

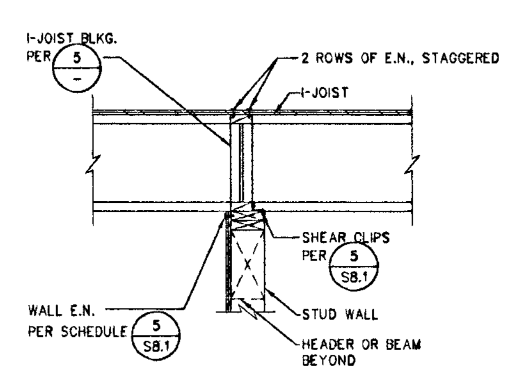

12 I-JOIST PERPENDICULAR TO SHEAR WALL 3/4"=1'-0"

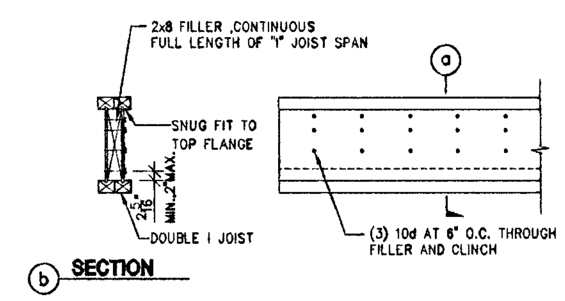

8 DOUBLE I-JOIST

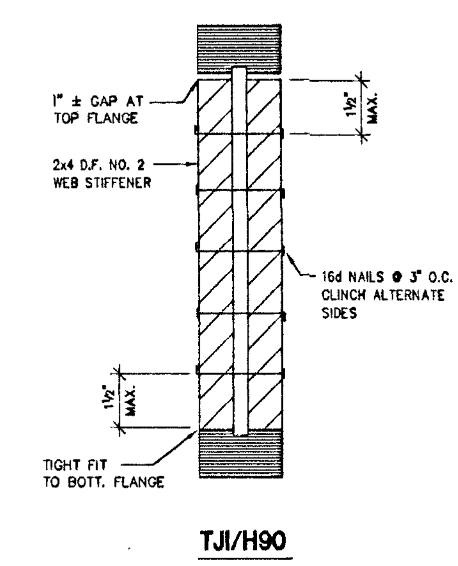

4 WOOD I-JOIST STIFFENER N.T.S.

FILE: E:\00B222\STRUCT\Phase_2\00222S2-82.dwg08/14/01 at 16:22
XREF: E:\00B222\STRUCT\00222TB.dwg

FIELD PAOLI
Architecture
1045 Sansome St.
Suite 206
San Francisco
California, 94111
Tel. 415. 788. 6606
Fax 415. 788. 6650

SARATOGA LIBRARY

SANTA CLARA COUNTY LIBRARY

13650 Saratoga Avenue
Saratoga, California 95070

DASSE DESIGN INC.
STRUCTURAL ENGINEERS
33 New Montgomery St., Suite 850
San Francisco CA 94105
415/243-8400 - Fax 415/243-9165

REGISTERED PROFESSIONAL ENGINEER
WILLIAM A. ANDREWS
S 3773
Exp. 3-31-02
STRUCTURAL
STATE OF CALIFORNIA

DATE OCTOBER 26, 2001

REVISIONS

CONSTRUCTION DOCUMENTS
BID SET

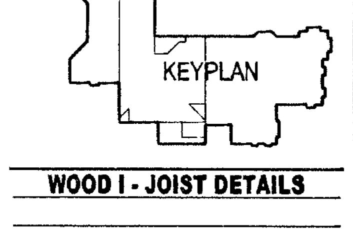

WOOD I - JOIST DETAILS

SCALE AS NOTED
DRAWN BY
CHECKED BY SRB
JOB NO. 00B222

PHASE - 2

SHEET NO. **S8.2**

All drawings and written material appearing herein constitute the original and unpublished work of the architect and the same may not be duplicated, used, or disclosed without the written consent of the architect © Field Paoli

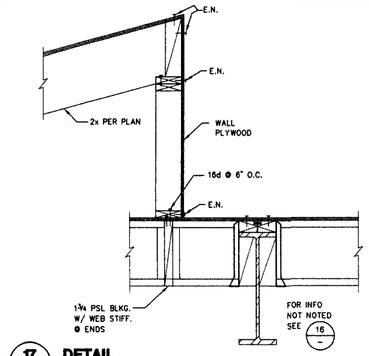

17 / – DETAIL 1"=1'-0"

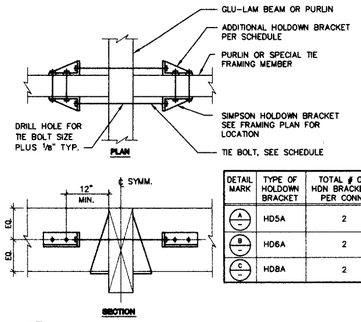

DETAIL MARK	TYPE OF HOLDOWN BRACKET	TOTAL # OF HDN BRACKETS PER CONN.	TIE BOLT
A / –	HD5A	2	–
B / –	HD6A	2	–
C / –	HD8A	2	–

13 / – SEISMIC TIE N.T.S.

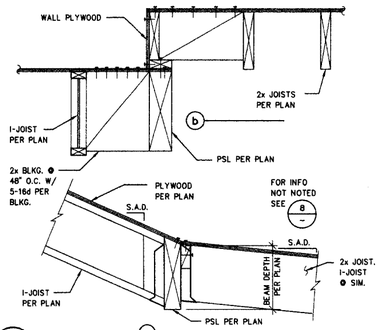

9 / – DETAIL 1"=1'-0"

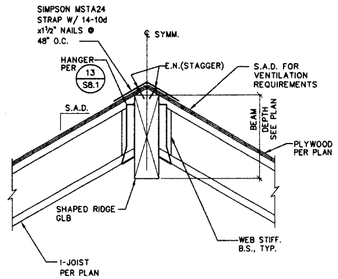

5 / – RIDGE/HIP BEAM DETAIL 1"=1'-0"

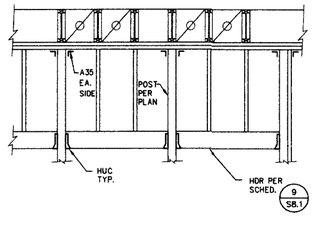

1 / – WALL FRAMING AT WINDOWS 1/2"=1'-0"

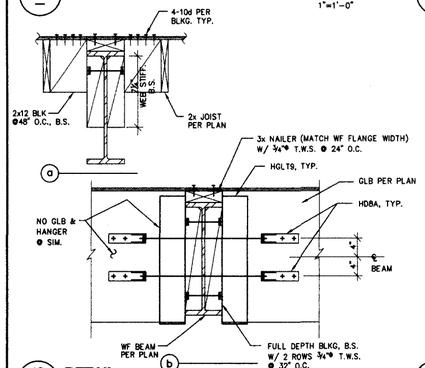

18 / – DETAIL 1"=1'-0"

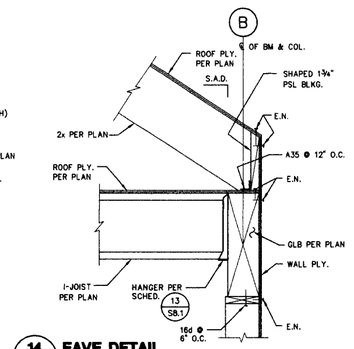

14 / – EAVE DETAIL 1"=1'-0"

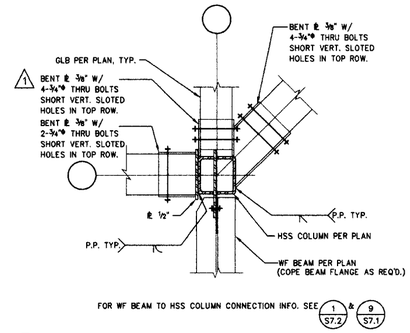

10 / – BEAM TO HSS COLUMN CONNECTION DETAIL 1"=1'-0"

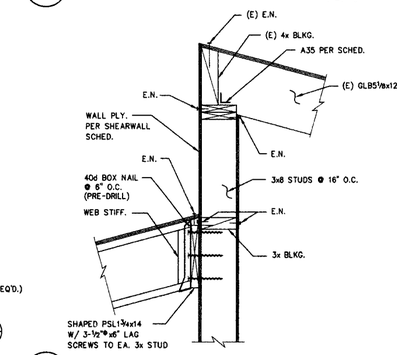

6 / – DETAIL 1"=1'-0"

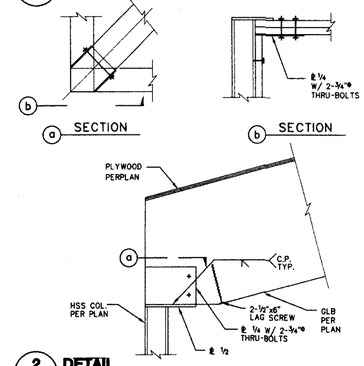

2 / – DETAIL 1"=1'-0"

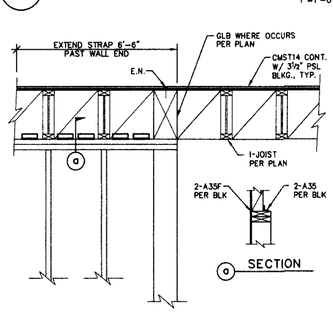

19 / – DETAIL ¾"=1'-0"

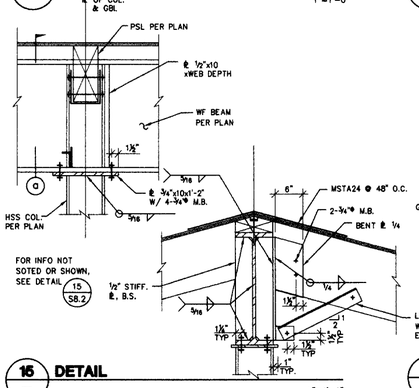

16 / – DETAIL 1"=1'-0"

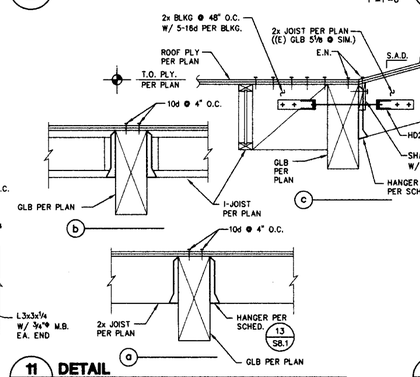

11 / – DETAIL N.T.S.

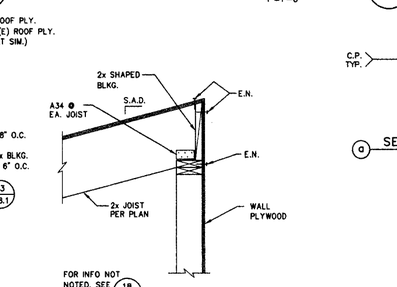

7 / – EAVE DETAIL 1"=1'-0"

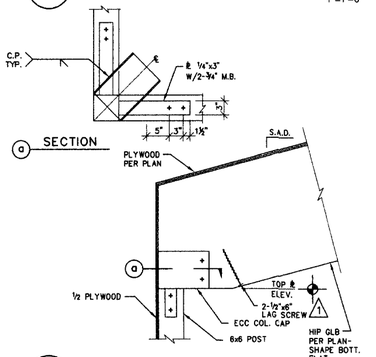

3 / – HIP GLB TO WOOD POST 1"=1'-0"

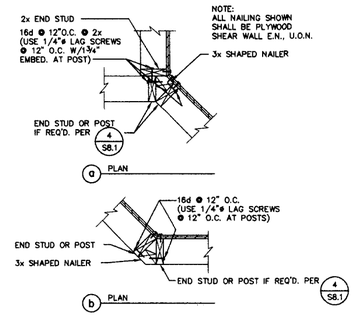

20 / – SKEWED SHEAR WALL INTERSECTIONS N.T.S.

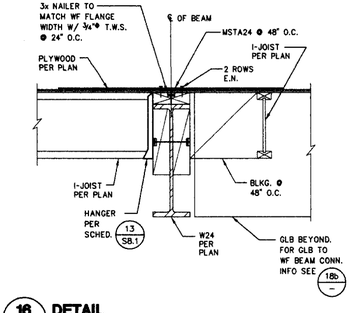

16 / – DETAIL 1"=1'-0"

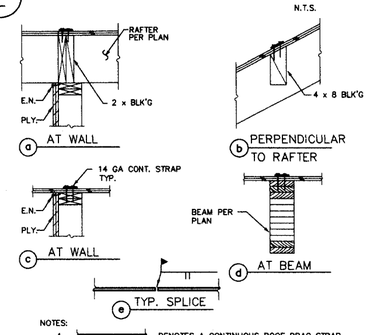

NOTES:
1. DENOTES A CONTINUOUS ROOF DRAG STRAP. SEE ROOF PLANS FOR STRAP LOCATIONS.
2. USE 14GAx3" CONTINUOUS STRAP W/ 10d NAILS @3½"O.C. STAGG'D.
3. SEE "e" ABOVE FOR TYP. STRAP SPLICE. FIELD LOCATE AS REQ'D.

12 / – ROOF DRAG STRAPS 1"=1'-0"

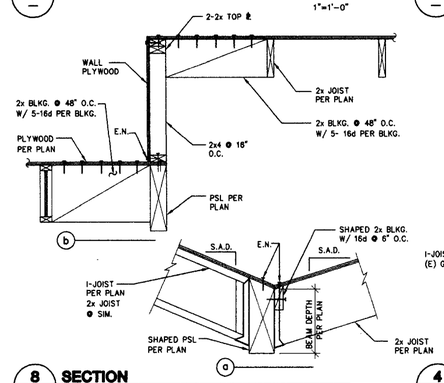

8 / – SECTION 1"=1'-0"

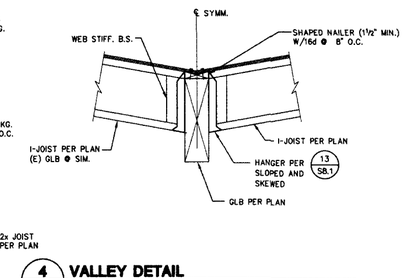

4 / – VALLEY DETAIL 1"=1'-0"

FIELD PAOLI

Architecture
1045 Sansome St.
Suite 206
San Francisco
California, 94111
Tel. 415. 788. 6606
Fax 415. 788. 6650

SARATOGA LIBRARY

SANTA CLARA COUNTY LIBRARY

13650 Saratoga Avenue
Saratoga, California 95070

DASSE DESIGN INC.
STRUCTURAL ENGINEERS
33 New Montgomery St., Suite 800
San Francisco, CA 94105
415/243-9400 - Fax 415/243-9185

REGISTERED PROFESSIONAL ENGINEER WILLIAM A. ANDREWS S 3773 Exp. 3-31-02 STRUCTURAL STATE OF CALIFORNIA

DATE	JANUARY 25, 2002

REVISIONS
CONSTRUCTION DOCUMENTS
BID SET 10/26/01
⚠ ADDENDUM 1 11/20/01
CONFORM SET RE-PLOT

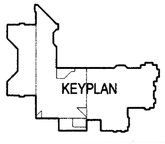

WOOD DETAILS

SCALE	AS NOTED
DRAWN BY	
CHECKED BY	SRB
JOB NO.	00B222

PHASE - 2

SHEET NO. **S8.3**

All drawings and written material appearing herein constitute the original and unpublished work of the architect and the same may not be duplicated, used, or disclosed without the written consent of the architect ©Field Paoli

FILE: E:\00B222\STRUCT\Phase_2\00222S2-S3.dwg(01/25/02 at 11:39
XREF: E:\00B222\STRUCT\Phase_2\00222-TB.dwg

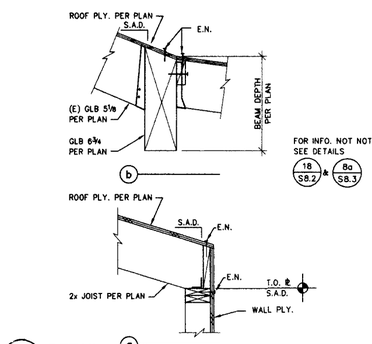

17 DETAIL 1"=1'-0"

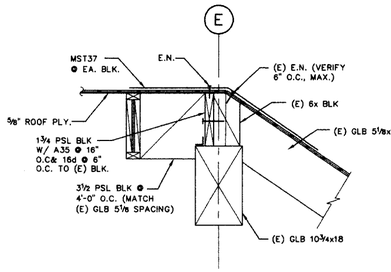

13 DETAIL 1"=1'-0"

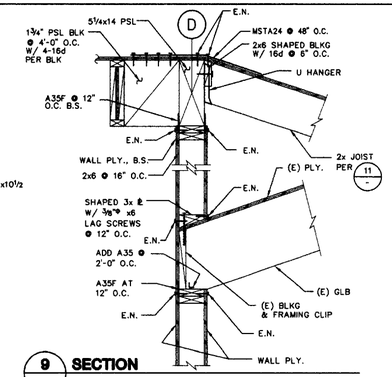

9 SECTION 1"=1'-0"

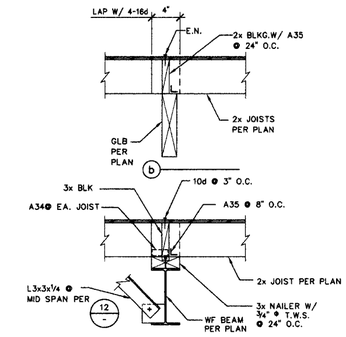

5 DETAIL N.T.S.

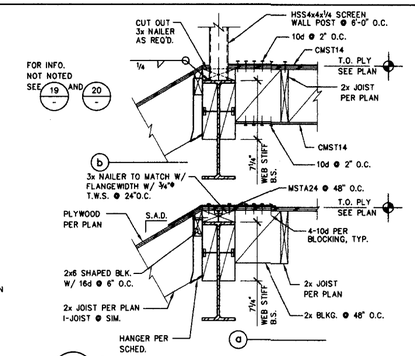

1 DETAIL 1/2"=1'-0"

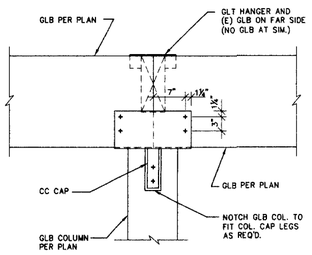

18 GLB BEAM TO GLB COLUMN CONNECTION DETAIL 1"=1'-0"

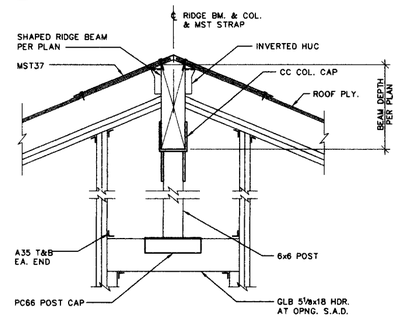

14 GABLE END WALL AT RIDGE

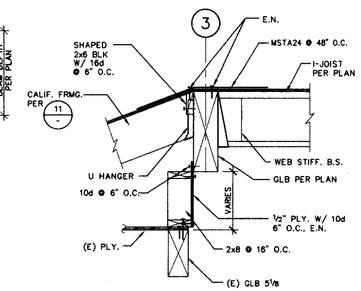

10 DETAIL 1"=1'-0"

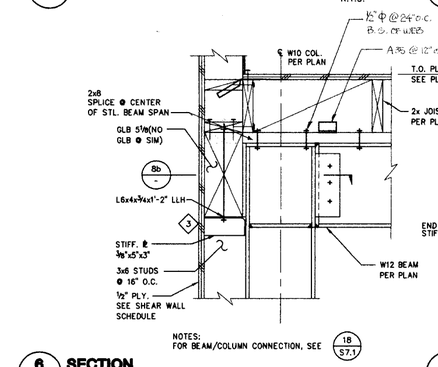

6 SECTION 1"=1'-0"

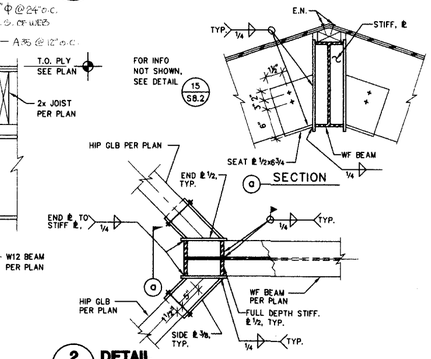

2 DETAIL 1"=1'-0"

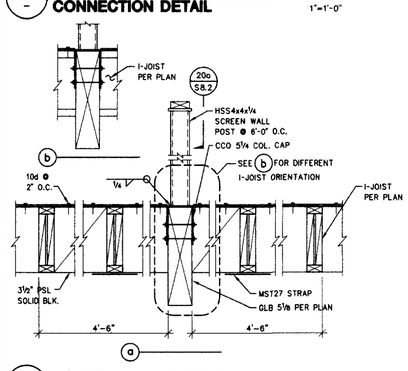

19 SCREEN WALL POST DETAIL 1"=1'-0"

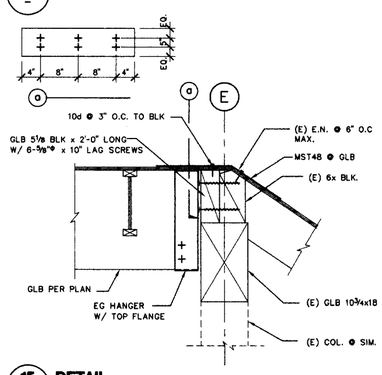

15 DETAIL N.T.S.

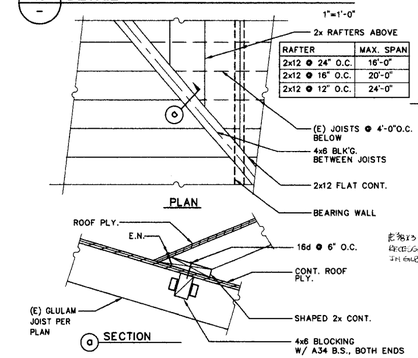

RAFTER	MAX. SPAN
2x12 @ 24" O.C.	16'-0"
2x12 @ 16" O.C.	20'-0"
2x12 @ 12" O.C.	24'-0"

11 "CALIFORNIA FRAMING" N.T.S.

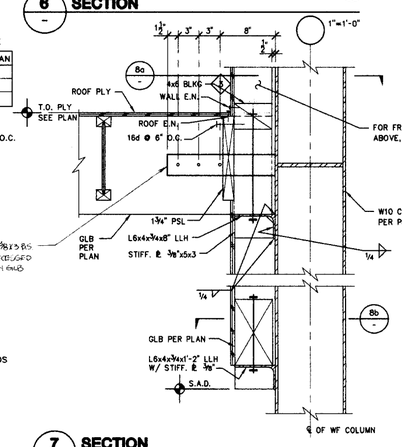

7 SECTION N.T.S.

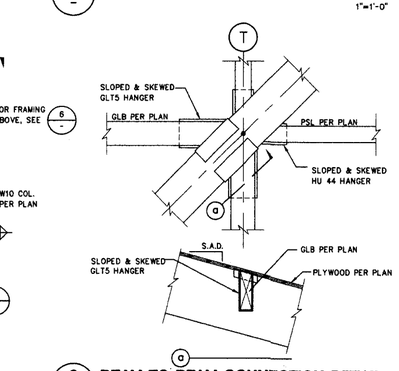

3 BEAM TO BEAM CONNECTION DETAIL 1"=1'-0"

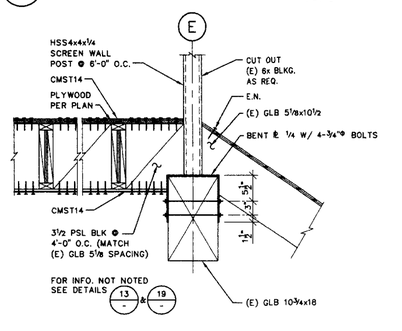

20 SCREEN WALL POST DETAIL ON GRID E 1"=1'-0"

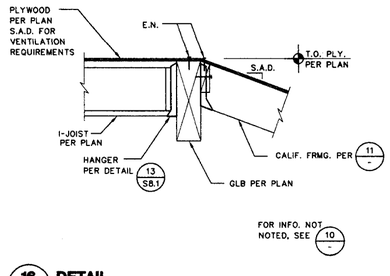

16 DETAIL N.T.S.

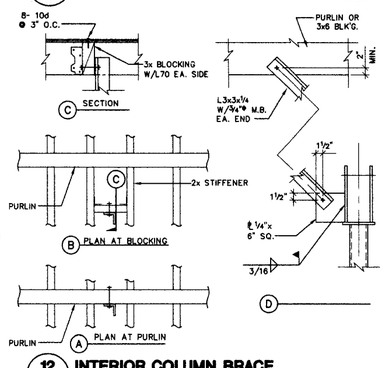

12 INTERIOR COLUMN BRACE

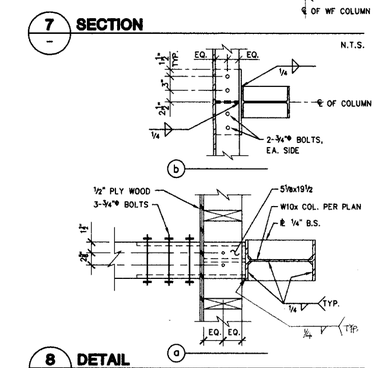

8 DETAIL 1"=1'-0"

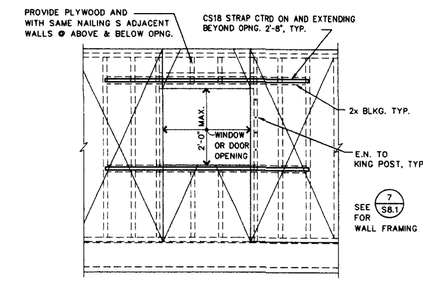

4 SHEAR WALL WITH OPENING N.T.S.

FIELD PAOLI

Architecture
1045 Sansome St.
Suite 206
San Francisco
California, 94111
Tel. 415. 788. 6606
Fax 415. 788. 6650

SARATOGA LIBRARY

SANTA CLARA COUNTY LIBRARY

13650 Saratoga Avenue
Saratoga, California 95070

DASSE DESIGN INC.
STRUCTURAL ENGINEERS
33 New Montgomery St., Suite 850
San Francisco, CA 94105
415/243-8400 – Fax 415/243-9180

REGISTERED PROFESSIONAL ENGINEER WILLIAM A. ANDREWS S 3773 Exp. 3-31-02 STRUCTURAL STATE OF CALIFORNIA

DATE	OCTOBER 26, 2001
REVISIONS	
	CONSTRUCTION DOCUMENTS BID SET

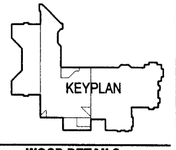

WOOD DETAILS

SCALE	AS NOTED
DRAWN BY	
CHECKED BY	SRB
JOB NO.	00B222

PHASE - 2

SHEET NO. **S8.4**

All drawings and written material appearing herein constitute the original and unpublished work of the architect and the same may not be duplicated, used, or disclosed without the written consent of the architect ©Field Paoli

FILE: E:\00B222\STRUCT\Phase-2\00222S2-S4.dwg09/27/01 at 10:37
PROT: \\00B222\STRUCT\00B222S8.dwg

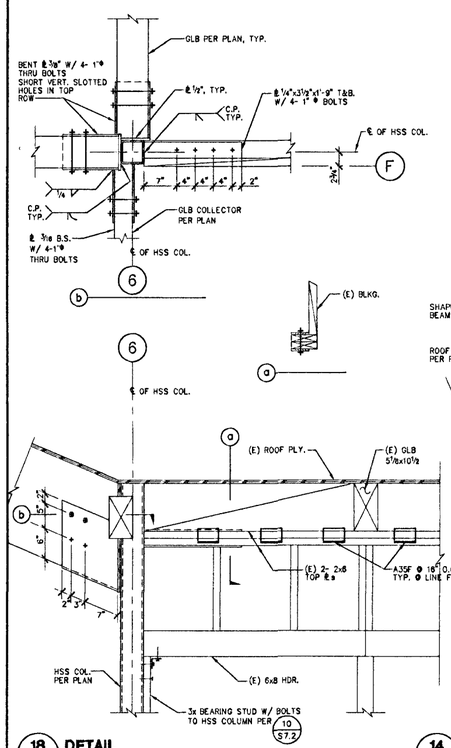

18 DETAIL

1"=1'-0"

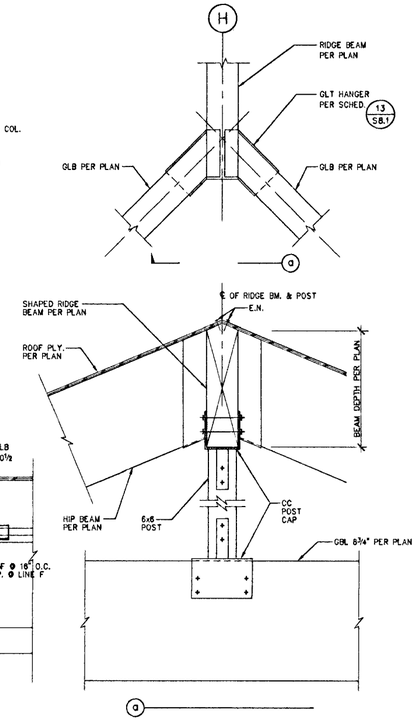

14 GLB BEAM TO RIDGE CONNECTION

1"=1'-0"

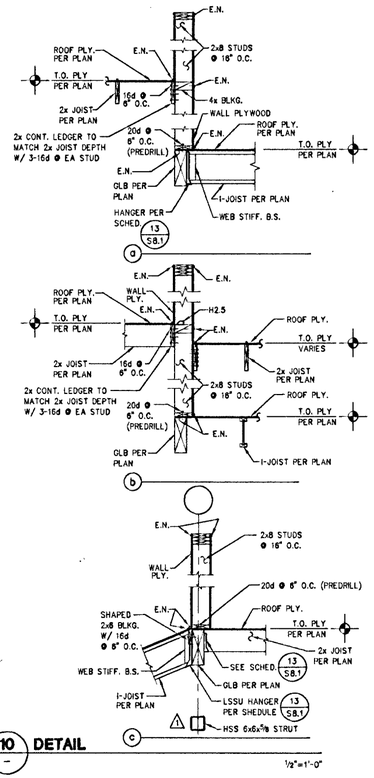

10 DETAIL

1/2"=1'-0"

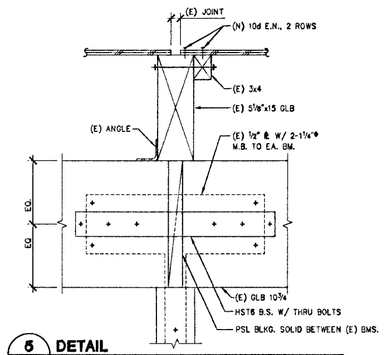

5 DETAIL

1 1/2"=1'-0"

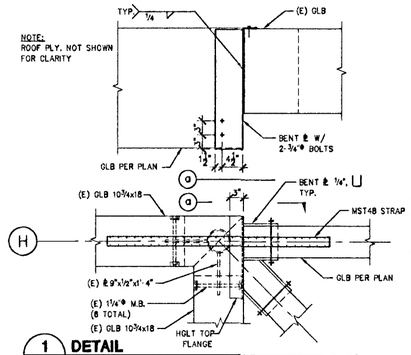

1 DETAIL

1"=1'-0"

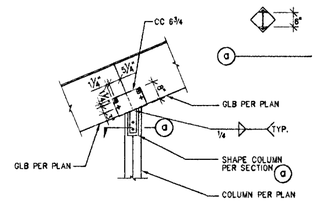

6 GLB TO WOOD COLUMN CONNECTION

1/2"=1'-0"

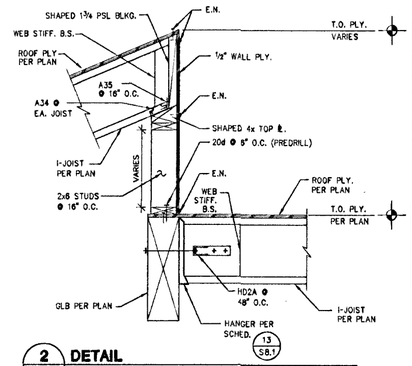

2 DETAIL

1"=1'-0"

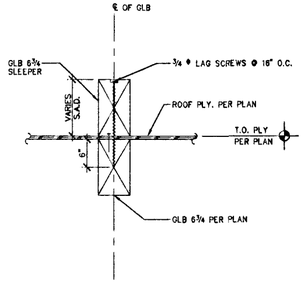

19 FRAMING DETAIL AT MECHANICAL EQUIPMENT

1"=1'-0"

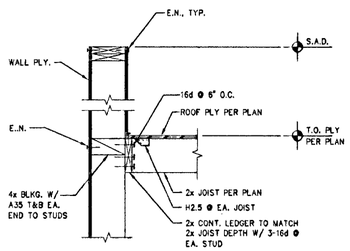

16 ROOF FRAMING TO WALL DETAIL

1"=1'-0"

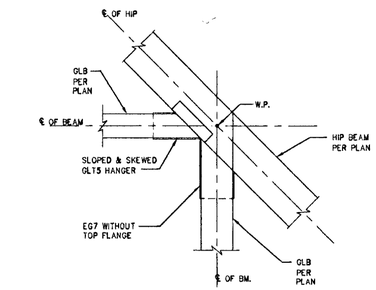

11 DETAIL

1"=1'-0"

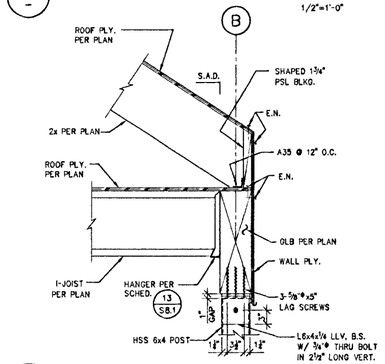

7 HSS POST CONNECTION DETAIL

1"=1'-0"

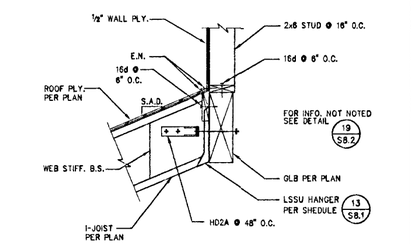

3 DETAIL

1"=1'-0"

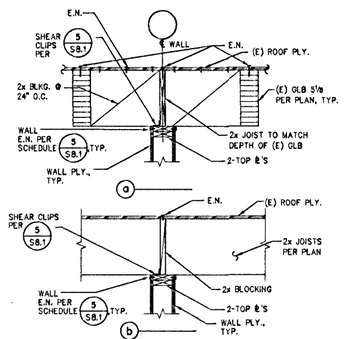

20 SHEARWALL TO (E) FRAMING DETAIL

3/4"=1'-0"

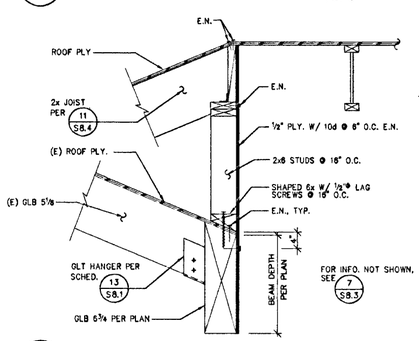

16 DETAIL

1"=1'-0"

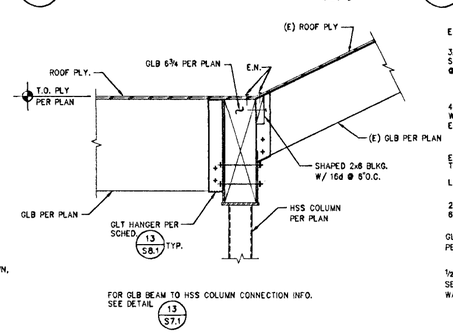

12 GLB BEAM TO GLB BEAM CONNECTION DETAIL

1"=1'-0"

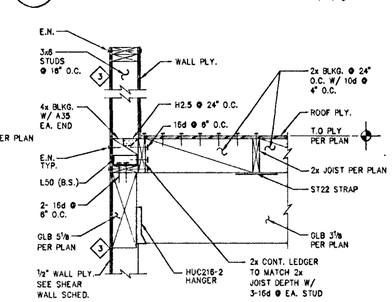

8 ROOF FRAMING TO WALL DETAIL

1"=1'-0"

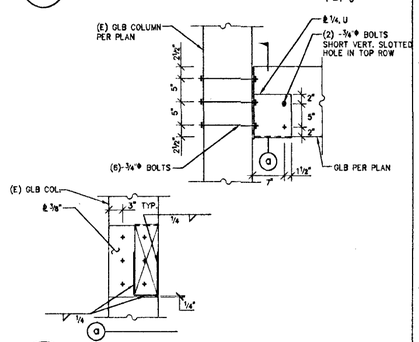

4 DETAIL

1"=1'-0"

FILE: E:\008222\STRUCT\Phase_2\008222S2-85.dwg01/25/02 at 11:41
XREF: E:\008222\STRUCT\008222TB.dwg

FIELD PAOLI

Architecture
1045 Sansome St.
Suite 206
San Francisco
California, 94111
Tel. 415. 788. 6606
Fax 415. 788. 6650

SARATOGA LIBRARY

SANTA CLARA COUNTY LIBRARY

13650 Saratoga Avenue
Saratoga, California 95070

DASSE DESIGN INC.
STRUCTURAL ENGINEERS
33 New Montgomery St., Suite 850
San Francisco, CA 94105
415/243-8400 - Fax 415/243-9165

REGISTERED PROFESSIONAL ENGINEER WILLIAM A. ANDREWS S 3773 Exp. 3-31-02 STRUCTURAL STATE OF CALIFORNIA

DATE	JANUARY 25, 2002

REVISIONS
- CONSTRUCTION DOCUMENTS
- BID SET 10/26/01
- 1 ADDENDUM 1 11/20/01
- CONFORM SET RE-PLOT

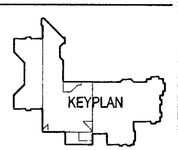

WOOD DETAILS

SCALE	AS NOTED
DRAWN BY	
CHECKED BY	SRB
JOB NO.	008222

PHASE - 2

SHEET NO. **S8.5**

All drawings and written material appearing herein constitute the original and unpublished work of the architect and the same may not be duplicated, used, or disclosed without the written consent of the architect ©Field Paoli

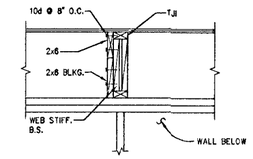

1 DETAIL
1"=1'-0"

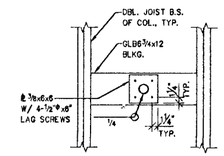

NOTE:
SEE S.A.D. FOR LOCATION & UPPER CONNECTION DETAIL

2 PIPE COLUMN BASE
½"=1'-0"

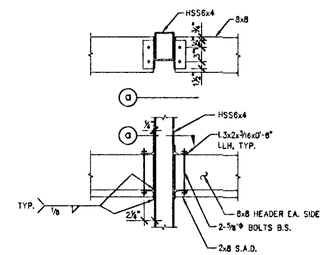

3 DETAIL
1"=1'-0"

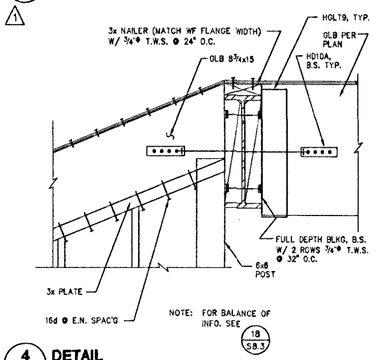

4 DETAIL
1"=1'-0"

FIELD PAOLI

Architecture
1045 Sansome St.
Suite 206
San Francisco
California, 94111
Tel. 415. 788. 6606
Fax 415. 788. 6650

SARATOGA LIBRARY

SANTA CLARA COUNTY LIBRARY

13650 Saratoga Avenue
Saratoga, California 95070

DASSE DESIGN INC.
STRUCTURAL ENGINEERS
33 New Montgomery St., Suite 830
San Francisco, CA 94105
415/243-0400 - Fax 415/243-9155

REGISTERED PROFESSIONAL ENGINEER
WILLIAM A. ANDREWS
S 3773
Exp. 3-31-02
STRUCTURAL
STATE OF CALIFORNIA

DATE	JANUARY 25, 2002
REVISIONS	
	CONSTRUCTION DOCUMENTS
	BID SET 10/26/01
	⚠1 ADDENDUM 1 11/20/01
	CONFORM SET RE-PLOT

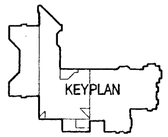

WOOD DETAILS

SCALE	AS NOTED
DRAWN BY	
CHECKED BY	SRB
JOB NO.	00B222

PHASE - 2

SHEET NO. **S8.6**

All drawings and written material appearing herein constitute the original and unpublished work of the architect and the same may not be duplicated, used, or disclosed without the written consent of the architect ©Field Paoli

FILE: E:\00B222\STRUCT\Phase_2\00B222S2-B6.dwg01/25/02 at 11:42
WHEN: E:\00B222\STRUCT\00B222B.dwg

ROOF TOP PACKAGED AIR CONDITIONING UNIT SCHEDULE

MFR: TRANE "INTELLIPAK" (VAV APPLICATION)

CODE	AREA SERVED	MODEL	NOM. CAP. (TONS)	NOM. EER	SUPPLY FAN CFM	SUPPLY FAN ESP(5) ("WC)	SUPPLY FAN BHP	SUPPLY FAN MOTOR H.P.	MIN. OA (10) (CFM)	EXHAUST/RETURN FAN CFM	EXHAUST/RETURN FAN ESP ("WC)	EXHAUST/RETURN FAN BHP	EXHAUST/RETURN FAN MOTOR H.P.	DX COOLING COIL GROSS TOTAL MBH	DX COOLING COIL NET SENS. MBH(4)	DX COOLING COIL ENT. DB	DX COOLING COIL ENT. WB	DX COOLING COIL LVG DB (3)	DX COOLING COIL LVG WB(3)	DX COOLING COIL AMB. DB	ELECT. DATA COMPRESSOR QTY	ELECT. DATA COMPRESSOR RLA(EA)	ELECT. DATA COMPRESSOR LRA(EA)	ELECT. DATA SUPPLY FAN FLA	ELECT. DATA EXHAUST/RETURN FAN FLA	ELECT. DATA COND. FANS QTY	ELECT. DATA COND. FANS FLA	ELECT. DATA UNIT MCA	ELECT. DATA VOLTS/ø	FILTERS TYPE	FILTERS QTY.	FILTERS EFF & SIZE	MAX. OPER WT LBS (6)	REMARKS
AC-1	NORTH	SXHF-C40	40	10.0	16,000	3.45	22.9	25	2,200	15,000 (EXH)	0.70	4.8	7.5	509.6	391.6	78.0	63.0	56.1	53.7	90	4	18.2	117	31.4	10.0	4	7.2 (TOTAL)	132.25	460/3	PLEATED MEDIA	16	30% - 20X25X2	8,000	(1) (2) (8) WITH HIGH CAPACITY EVAP. COIL.
AC-2	CENTRAL	SXHF-C50	50	9.6	18,000	3.95	28.4	30	2,300	16,500 (EXH)	0.70	6.2	7.5	615.4	437.8	77.5	63.0	55.8	53.0	90	2 2	27.3 18.2	178 117	38.2	10.0	6	10.8 (TOTAL)	165.55	460/3	PLEATED MEDIA	20	30% - 20X25X2	9,000	(1) (2) (8) WITH HIGH CAPACITY EVAP. COIL
AC-3	SOUTH	SXHF-C55	55	8.8	20,000	3.80	31.0	30	2,900	18,000 (EXH)	0.80	7.9	10	699.0	504.0	78.0	63.0	55.5	52.7	90	4	27.3	178	38.2	12.9	6	10.8 (TOTAL)	186.45	460/3	PLEATED MEDIA	20	30% - 20X25X2	9,500	(1) (2) (8) WITH HIGH CAPACITY EVAP. COIL.
AC-1A (ALT. A2)	NORTH	McQUAY RDT045C	45	10.7	16,000	2.75	15.8	20	2,200	16,000 (RET)	0.70	3.5	5.0	504.4	393.4	78.0	63.0	55.5	52.0	90	4	17	127	25.0	7.0	4	8.0	114.2	460/3	CARTRIDGE	4 8	65% - 12X24X12 65% - 24X24X12	11,000	(9)
AC-2A (ALT. A2)	CENTRAL	McQUAY RDT050C	50	9.9	18,000	2.70	18.9	20	2,300	18,000 (RET)	0.70	4.4	5.0	612.3	450.7	77.5	63.0	54.7	51.1	90	4	22	158	25.0	7.0	4	8.0	134.2	460/3	CARTRIDGE	4 8	65% - 12X24X12 65% - 24X24X12	11,200	(9)
AC-3A (ALT. A2)	SOUTH	McQUAY RDT060C	60	9.6	20,000	3.00	26.6	30	2,900	20,000 (RET)	0.80	5.7	7.5	723.5	523.0	78.0	63.0	54.2	50.2	90	4	24	187	37.5	10.8	6	12.0	165.7	460/3	CARTRIDGE	4 8	65% - 12X24X12 65% - 24X24X12	11,400	(9)

NOTES:

(1) PROVIDE ALL UNITS WITH EXTENDED CASING, SIDE SUPPLY AND REAR END RETURN DUCT CONNECTIONS, 100% INTEGRATED AIR SIDE ECONOMIZER, 100% MODULATING EXHAUST FAN WITH SPACE PRESSURIZATION CONTROLS, CONTROLS FOR VAV APPLICATIONS INCLUDING UNIT INTERIOR MOUNTED VFD WITH BY-PASS SWITCH FOR SUPPLY AIR FAN AND CONDENSER FANS, "FROST-STAT" OR HOT GAS BY-PASS FOR LOW LOAD CONDITIONS, PNEUMATIC ZONE THERMOSTAT FEEDBACK SUPPLY AIR RESET, NIGHT SET-BACK/SET-UP REMOTE SENSOR, TERMINALS FOR REMOTE OCCUPIED/UNOCCUPIED SIGNAL, RETURN AIR MORNING WARM-UP SENSOR AND ASSOCIATED RELAY(S) FOR SIGNALING VAV BOXES, CO2 SENSOR (TO BE UNIT OR RETURN AIR DUCT MOUNTED) AND "TRAQ" COMBINATION DAMPER AND AIR FLOW MONITOR, AND ASSOCIATED CONTROLS TO PROVIDE DEMAND CONTROL VENTILATION PER 2001 TITLE 24 SECTION 121-c-4, HINGED ACCESS DOORS. ALL UNIT FUNCTIONS SHALL BE CONTROLLED BY DDC BASED CONTROLLER(S) WITH A SINGLE UNIT MOUNTED OPERATORS' INTERFACE DISPLAY FOR LOCAL PROGRAMMING, STATUS INDICATION AND DIAGNOSTICS.

(2) PROVIDE ALL UNITS WITH MASON MODEL MBR BASE FRAME ISOLATOR WITH POWDER COATED BR TYPE NEOPRENE MOUNTS WITH INTEGRAL SEISMIC RESTRAINTS AND MINIMUM OF FIVE 4X3X1/4" HOT-DIPPED GALVANIZED TUBE STEEL CROSS PIECES (TO BE VERIFIED BY ISOLATOR MANUFACTURER DEPENDING ON ACTUAL DISTANCE BETWEEN SUPPORT POINTS, ETC.).

(3) DX COOLING COIL LEAVING AIR TEMPERATURES ARE DOWNSTREAM OF SUPPLY FAN (SUPPLY FAN MOTOR HEAT IS INCLUDED).

(4) SENSIBLE COOLING CAPACITY INCLUDES DEDUCT FOR SUPPLY FAN MOTOR HEAT.

(5) SUPPLY FAN ESP INCLUDES BOTH SUPPLY AND RETURN AIR DUCT LOSSES AND AN ADDITIONAL 0.75" FOR LOADED FILTERS.

(6) UNIT WEIGHTS INCLUDE ALL ACCESSORIES EXCEPT VIBRATION ISOLATION AND SUPPORT FRAMES.

(7) SEE SPECIFICATIONS FOR ADDITIONAL REQUIREMENTS INCLUDING CONTROLS.

(8) ALL UNITS TO BE SHUT DOWN UPON DETECTION OF SMOKE AS REQUIRED BY CMC SECTION 608 (SEE ROOF PLAN FOR LOCATIONS OF DUCT MOUNTED SMOKE DETECTORS - DETECTORS SHALL ALSO BE MONITORED BY BUILDING'S FIRE ALARM SYSTEM - COORDINATE WITH ELECTRICAL CONTRACTOR).

(9) McQUAY "ADD ALTERNATE A2" - UNIT ARRANGEMENTS, ACCESSORIES, CONTROL, ETC. SHALL BE AT LEAST EQUIVALENT TO THAT INDICATED FOR TRANE UNITS. SEE ROOF PLAN FOR MECHANICAL ROOF WELL SIZES AND DUCT CONNECTION POINTS WHICH LIMIT UNIT DIMENSIONS AND DISTANCES BETWEEN DISCHARGE AND RETURN DUCT CONNECTIONS (THE CONTRACTOR SHALL BE RESPONSIBLE FOR SUBMITTING SHOP DRAWINGS SHOWING ANY REVISED LAYOUTS - BOTH ABOVE AND BELOW ROOF FOR THE McQUAY UNITS AT SAME TIME AS UNIT SUBMITTAL IS PROVIDED IF THIS ALTERNATE IS CHOSEN). SEE SOUND TRAP SCHEDULE FOR ASSOCIATED ALTERNATE SOUND TRAPS. VIBRATION ISOLATION SUPPORT FRAMES SHALL BE MASON MODEL WFBR WITH LONGITUDINAL STEEL BEAMS ALONG EACH SIDE AND STEEL TUBE CROSS PIECES AT EACH OF THE FIVE PAIRS OF BR TYPE MOUNTS. PROVIDE ADDITIONAL VFDs FOR RETURN FANS. DEMAND CONTROL VENTILATION SHALL BE ACHIEVED BY STANDARD UNIT MICROTECH CONTROLLER WITH REMOTE RETURN AIR DUCT MOUNTED CO2 SENSOR AND ASSOCIATED TRANSDUCER.

(10) MINIMUM OUTSIDE AIR QUANTITY SETPOINT FOR DEMAND CONTROL VENTILATION- MINIMUM OUTSIDE AIR QUANTITY SHALL BE RESET VIA RETURN AIR CO2 SENSOR TO MAINTAIN CO2 LEVELS BELOW 800 PPM.

MISCELLANEOUS EQUIPMENT SCHEDULE

CODE	DESCRIPTION
HHWS 1	"CALIFORNIA HYDRONICS" PRE-ASSEMBLED HEATING HOT WATER SKID SUPPORT PACKAGE: PROVIDE WITH TWO TELEDYNE LAARS MIGHTY MAX MODEL PH0775M, 775 MBH INPUT/658 MBH OUTPUT, FAN ASSISTED NATURAL GAS FIRED FIN-TUBE OUTDOOR BOILER WITH 3/4 HP PRIMARY CIRCULATION PUMP, TWO BELL & GOSSET SERIES 1531 1-1/4 BC 3 HP CLOSE-COUPLED SECONDARY SYSTEM PUMPS WITH 60 GPM @ 65' HEAD CAPACITY EACH (EACH PUMP SIZED FOR 100% OF TOTAL SYSTEM FLOW AT MAXIMUM HEATING CONDITION). WESSELS MODEL NLA-200 BLADDER TYPE ASME EXPANSION TANK WITH CODE SIGHT GLASS, TANGENTIAL AIR SEPARATOR, 2 GALLON CHEMICAL "POT FEEDER" AND SINGLE CONTROL PANEL COMPLETE WITH PUMP MOTOR STARTERS, 120 VOLT AND LOW VOLTAGE CONTROL TRANSFORMERS, BOILER SEQUENCING CONTROLLER, SUPPLY WATER - OUTSIDE AIR TEMPERATURE RESET, OUTSIDE AIR TEMPERATURE LOCK-OUT AND AUTOMATIC LEAD/LAG PUMP ALTERNATOR/CONTROLLER WITH AUTOMATIC CHANGE-OVER TO LAG PUMP ON FAILURE OF LEAD PUMP AND GENERAL ALARM CONTACT FOR BOILERS AND PUMPS FOR REMOTE MONITORING BY FUTURE BUILDING EMS. ALL COMPONENTS TO BE FACTORY MOUNTED, PIPED, AND WIRED ON A SINGLE PLATFORM MADE WITH A CONTINUOUS PERIMETER STRUCTURAL STEEL FRAME, 1/8" MIN. THICK DIAMOND PLATE DECK, MASON SLR 100 SERIES SINGLE SPRING ISOLATOR MOUNT WITH MIN. 2" DEFLECTION SPRINGS, INTEGRAL SEISMIC RESTRAINTS, INTERNAL NEOPRENE ACOUSTICAL PAD AND POWDER COATING, AND UNIT MOUNTED "HEIGHT-SAVING" BRACKETS. ENTIRE ASSEMBLY SHALL BE FACTORY PAINTED PRIOR TO SHIPPING. SINGLE POINT 460 VOLT-3ø - 16.0 AMP POWER CONNECTION. 7,500 LBS MAXIMUM OPERATING WEIGHT. SEE HEATING HOT WATER SKID PACKAGE CONSTRUCTION DETAIL, SCHEMATIC PIPING DIAGRAM AND CONTROLDIAGRAM ON DRAWING M4.1 AND SPECIFICATIONS FOR EQUIPMENT MANUFACTURERS, MODEL NO.s AND ADDITIONAL/COMPLETE REQUIREMENTS.
CAC 1	"JOHNSON CONTROLS" MODEL AD-030 TANK MOUNTED DUPLEX LUBRICATED CLIMATE CONTROL AIR COMPRESSOR: 12.0 ACTUAL CFM AT 100% RUNTIME AND 80 PSIG WITH ONE COMPRESSOR; PROVIDE WITH (2) 3HP 460V/3ø MOTORS, 120 GALLON ASME RECEIVER TANK, AUTOMATIC TANK DRAIN, UNIT MOUNTED DELUXE DUPLEX ALTERNATOR WITH BUILT-IN STARTERS, REFRIGERATED AIR DRYER, AND MASON SLR 100 SERIES SINGLE SPRING ISOLATOR MOUNT WITH MIN. 2" DEFLECTION SPRINGS, INTEGRAL SEISMIC RESTRAINTS, INTERNAL NEOPRENE ACOUSTICAL PAD AND POWDER COATING. UNIT SIZE AND CAPACITY IS FOR REFERENCE ONLY AND IS SUBJECT TO VERIFICATION BY BIDDING CONTROL CONTRACTORS WHO SHALL INCLUDED PRICE FOR LARGER UNIT IN PROPOSAL AND INFORM GENERAL CONTRACTOR OF ANY HP CHANGES. SUCCESSFUL BIDDER SHALL SUBMIT SIZING CALCULATIONS WITH COMPRESSOR SUBMITTAL FOR APPROVAL BY PROJECT MECHANICAL ENGINEER (SEE SPECIFICATIONS FOR COMPRESSOR AND TANK SIZING CRITERIA).
DSS IU-1	"MITSUBISHI" MODEL PK18EK NOMINAL 1.5 TON COOLING ONLY DUCTLESS SPLIT-SYSTEM INDOOR WALL MOUNTED FAN COIL UNIT WITH WIRED REMOTE CONTROLLER AND 0.9 FLA FAN MOTOR (2.0 AMP MIN. TOTAL UNIT AMPACITY AT 115 VOLT - 1ø POWER). OPERATING WEIGHT=68 LBS
DSS OU-1	"MITSUBISHI" MODEL PU18EK NOMINAL 1.5 TON COOLING ONLY DUCTLESS SPLIT-SYSTEM OUTDOOR CONDENSING UNIT WITH (1) 0.65 FLA FAN MOTOR, 12.0 RLA/ 37 LRA COMPRESSOR, 0.11 AMP CRANKCASE HEATER (16 AMP. MIN. TOTAL UNIT AMPACITY AT 208 VOLT - 1ø POWER). PROVIDE WITH MASON MODEL POWDER COATED BR TYPE NEOPRENE ISOLATOR MOUNTS WITH INTEGRAL SEISMIC RESTRAINTS. OPERATING WEGHT=160 LBS
FSD-1	RUSKIN MODEL FSD36 (FSD60 WHERE UNDER 12" WIDE) COMBINATION FIRE-SMOKE DAMPER. UL555 CLASSIFIED AND UL555S LEAKAGE CLASS II RATED FOR HORIZONTAL AND VERTICAL INSTALLATIONS. PROVIDE WITH MODEL DSDN INTEGRAL "NO FLOW" DUCT SMOKE DETECTOR AND REMOTE INDICATOR PANEL, 110V-1 PHASE HOLD OPEN - NORMALLY CLOSED ACTUATOR AND FUSIBLE LINK.
FSD-2	SAME AS FSD-1 EXCEPT WITH MODEL DSD INTEGRAL SAMPLING TUBE TYPE DUCT SMOKE DETECTOR.
GH 1,2	"GREENHECK" FABRA-HOOD GRAVITY RELIEF AIR HOOD WITH 48"X48" NECK, ALUMINUM CONSTRUCTION, RUSKIN CD36 LOW LEAKAGE CONTROL DAMPER AND 12V/1ø 2 POSITION ACTUATOR AND ROOF CURB WITH WOOD NAILER, BUILT-IN CANT (VERIFY WITH ARCHITECT) AND TAPERED BOTTOM AS REQUIRED TO MATCH ROOF SLOPE (FIELD VERIFY ROOF SLOPE). NOTE - CONFIRM SIZE MATCHES EXISTING GRAVITY HOOD IN FIELD BEFORE ORDERING.

EXHAUST FAN SCHEDULE

MFR: GREENHECK (UON)

CODE	TYPE AND MODEL	CFM	S.P. "W.C.	BHP	MOTOR HP	MOTOR VOLT/PHASE	SERVICE	LOCATION	OPER WT #	CONTROL	SONES	REMARKS
EF-1	ROOFTOP CENT. GB-140	1500	0.75	0.39	1/2	120/1	RESTROOMS AND JANITOR STOR. RMS	ROOF	130	DEDICATED TIME CLOCK SIGNAL	<9.9	(1)
EF-2	ROOFTOP CENT. GB-80	400	0.625	0.09	1/4	120/1	PANTRY 109	ROOF	60	LOCAL ON/OFF SWITCH W/PILOT LIGHT	7.5	(1)
EF-3	ROOFTOP CENT. GB-80	400	0.75	0.11	1/4	120/1	FRIENDS SORTING	ROOF	60	DEDICATED TIME CLOCK SIGNAL	8.3	(1)
EF-4	ROOFTOP CENT. GB-80	400	0.625	<0.09	1/4	120/1	FAMILY TOILETS 127 & 129	ROOF	60	DEDICATED TIME CLOCK SIGNAL	7.4	(1)
EF-5	ROOFTOP CENT. GB-100	800	0.625	0.16	1/4	120/1	ELEC. ROOM 149	ROOF	80	LOCAL LINE VOLTAGE T'STAT	7.1	(1)
EF-6	ROOFTOP CENT. GB-80	350	0.75	<0.11	1/4	120/1	STAFF TOILETS 144 & 145	ROOF	60	DEDICATED TIME CLOCK SIGNAL	<8.3	(1)
EF-7	ROOFTOP CENT. GB-90	500	0.625	0.10	1/4	120/1	STAFF LOUNGE 146	ROOF	60	LOCAL ON/OFF SWITCH W/PILOT LIGHT	7.8	(1)
EF-8	ROOFTOP CENT. GB-100	800	0.625	0.16	1/4	120/1	ELEC. ROOM 109	ROOF	80	LOCAL LINE VOLTAGE T'STAT	7.1	(1)
EF-9	ROOFTOP CENT. GB-240	3000	0.25	<0.26	1/4	120/1	RELIEF AIR	EAST NORTH TOWER	175	MANUAL BY-PASS TIMER AT TCP-1	<5.7	(1)
EF-10	ROOFTOP CENT. GB-240	3000	0.25	<0.26	1/4	120/1	RELIEF AIR	WEST NORTH TOWER	175	MANUAL BY-PASS TIMER AT TCP-1	<5.7	(1)
EF-11	ROOFTOP CENT. GB-240	3000	0.25	<0.26	1/4	120/1	RELIEF AIR	MAIN HALL TOWER	175	MANUAL BY-PASS TIMER AT TCP-1	<5.7	(1)
EF-12	ROOFTOP CENT. GB-240	3000	0.25	<0.26	1/4	120/1	RELIEF AIR	MAIN HALL TOWER	175	MANUAL BY-PASS TIMER AT TCP-1	<5.7	(1)
EF-13	ROOFTOP CENT. GB-240	3000	0.25	<0.26	1/4	120/1	RELIEF AIR	MAIN HALL TOWER	175	MANUAL BY-PASS TIMER AT TCP-1	<5.7	(1)
EF-14	ROOFTOP CENT. GB-240	3000	0.25	<0.26	1/4	120/1	RELIEF AIR	MAIN HALL TOWER	175	MANUAL BY-PASS TIMER AT TCP-1	<5.7	(1)

NOTES: (1) PROVIDE WITH MFR'S MIN. 12" HIGH PREFAB SOUND ATTENUATION ROOF CURB WITH WOOD NAILER AND BACKDRAFT DAMPER.

DRAWING INDEX

M0.1	LEGEND AND SCHEDULES
M0.2	SCHEDULES CONTINUED
M1.1	DEMOLITION PLANS
M2.1A	FLOOR PLAN - HVAC - NORTH
M2.1B	FLOOR PLAN - HVAC - CENTRAL
M2.1C	FLOOR PLAN - HVAC - SOUTH
M2.2A	FLOOR PLAN - HVAC PIPING - NORTH
M2.2B	FLOOR PLAN - HVAC PIPING - CENTRAL
M2.2C	FLOOR PLAN - HVAC PIPING - SOUTH
M3.1	ROOF PLAN - HVAC
M4.1	DETAILS AND DIAGRAMS
M4.2	DETAILS CONTINUED
M4.3	DETAILS CONTINUED
M5.1	TITLE 24 DOCUMENTATION
M5.2	TITLE 24 DOCUMENTATION
M5.3	TITLE 24 DOCUMENTATION

LEGEND AND ABBREVIATIONS

SYMBOL	ABBR	DESCRIPTION
		DETAIL NUMBER / DRAWING NUMBER
		SECTION NUMBER / DRAWING NUMBER
		EQUIPMENT IDENTIFICATION / EQUIPMENT NUMBER
CODE / SIZE CFM		AIR OUTLET (SIZE IS INLET SIZE)(4 WAY U.O.N.)
(A) CFM		SUPPLY AIR OUTLET (SIZE IS INLET SIZE)(4 WAY U.O.N.)
18X12/16ø		EQUIVALENT RECTANGUALR AND ROUND DUCT SIZES (CONTRACTOR'S CHOICE)
	CSD	CEILING SUPPLY DIFFUSER
	CRG/R	CEILING RETURN/TRANSFER GRILLE/REGISTER (W/ OBD)
	CEG/R	CEILING EXHAUST GRILLE/REGISTER (W/ OBD)
	WSG/R	WALL SUPPLY GRILLE/REGISTER (W/ OBD)
	WRG/R	WALL RETURN GRILLE/REGISTER (W/ OBD)
	WEG/R	WALL EXHAUST GRILLE/REGISTER (W/ OBD)
	LSD	LINEAR SUPPLY DIFFUSER
	LRD	LINEAR RETURN DIFFUSER
		SECTION THRU SUPPLY OR OUTSIDE AIR DUCT
		SECTION THRU RETURN OR RELIEF DUCT
		SECTION THRU EXHAUST AIR DUCT
OR	(N)	NEW DUCT/PIPE
OR	(E)	EXISTING DUCT/PIPE
OR		REMOVE EXISTING DUCT/PIPE
	UP/DN	DUCT OFFSET (RISE OR DROP)
OR	AL	ACOUSTICAL LINING (1" FIBERGLASS U.O.N.)
		DIRECTION OF AIRFLOW
	FC	FLEXIBLE DUCT CONNECTION
	VD/FD OR FSD	VOLUME DAMPER/FIRE DAMPER OR FIRE SMOKE DAMPER
OR	CDR	CONCEALED DAMPER REGULATOR
OR	DSD	DUCT MOUNTED SMOKE DETECTOR
	TV	TURNING VANES
		FLEXIBLE DUCT
		SQUARE TO ROUND DUCT
		REDUCING TRANSITION
OR		REDUCING TRANSITION
	CFF	CAPPED FOR FUTURE
	TSTAT	THERMOSTAT (UNLESS OTHERWISE DIRECTED - MOUNT AT 4'-0" AFF)
		MAIN PNEUMATIC CONTROL AIR
		SWITCHED PNEUMATIC CONTROL AIR
	TH	THERMOMETER (USE DIAL TYPE)
	PG	PRESSURE GAUGE
	FC	FLEXIBLE CONNECTION
		TEMPERATURE WELL
	TF	TEST FITTING (PETE'S PLUG)
	BD	BALANCING DEVICE (B&G CIRCUIT SETTER)
		SLOPE DOWN
		LINE CONTINUED
		UNION
	BV	BUTTERFLY VALVE (2 1/2" OR LARGER), BALL VALVE (2" OR SMALLER)
		STRAINER(PROVIDE WITH BLOW DOWN VALVE AND HOSE ADAPTER).
	SRV,RV	SAFETY RELIEF VALVE, RELIEF VALVE
		GAUGE COCK (NETTLE VALVE)
	ACV	AUTOMATIC CONTROL VALVE
	PRV	PRESSURE REDUCING VALVE
		GLOBE VALVE
	CKV	CHECK VALVE
OR	DN	DOWN
	UP	UP
		TEE (BRANCH LOOKING DOWN)
	RED	PIPING REDUCER
D	CD,D	CONDENSATE DRAIN
HWS	HWS	HEATING WATER SUPPLY
HWR	HWR	HEATING WATER RETURN
	AAV	AUTOMATIC AIR VENT
	AD	ACCESS DOOR (DUCT)
	AFF	ABOVE FINISHED FLOOR
	AP	ACCESS PANEL (CEILING OR WALL)
	ASD	AREA TYPE SPOT SMOKE DETECTOR
	BOD	BOTTOM OF DUCT
	CO2	CARBON DIOXIDE
	CTE	CONNECT TO EXISTING
	EA,OA	EXHAUST AIR, OUTSIDE AIR
	EQ	EQUAL
	FRP	FIBERGLASS REINFORCED PLASTIC (DUCT)
	GA	GAUGE
	MAV	MANUAL AIR VENT
	N	NO
	NA	NOT APPLICABLE
	NC	NORMALLY CLOSED
	NO	NORMALLY OPEN
	OBD	OPPOSED BLADE DAMPER
	OD	OUTSIDE DIMENSION
	POC	POINT OF CONNECTION
	PPM	PARTS PER MILLION
	PVS	COATED UNDERGROUND DUCT (EXISTING)
	RA,SA	RETURN AIR, SUPPLY AIR
	SAD	SEE ARCHITECTURAL DRAWINGS
	SPD	SEE PLUMBING DRAWINGS
	SSD	SEE STRUCTURAL DRAWINGS
	SQ. FT.	SQUARE FOOT
	TA	TRANSFER AIR
	TCP	TEMPERATURE CONTROL PANEL
	U.O.N.	UNLESS OTHERWISE NOTED
	VIB	VIBRATION ISOLATOR
	Y	YES
	(E)	EXISTING
	(N)	NEW
	(R)	RELOCATE/RELOCATED

FIELD PAOLI

Architecture
1045 Sansome St.
Suite 206
San Francisco
California, 94111
Tel. 415. 788. 6606
Fax 415. 788. 6650

SARATOGA LIBRARY

SANTA CLARA COUNTY LIBRARY

13650 Saratoga Avenue
Saratoga, California 95070

MECHANICAL DESIGN STUDIO inc
3330 Clayton Rd. Suite B
Concord California 94519-2838
tel 925. 680 6858
fax 925. 680 4346
www.mds-sf.com
PROJECT # 3024.00

REGISTERED PROFESSIONAL ENGINEER DOREL ANGHEL No. M 26561 Expires 9/30/02 MECHANICAL STATE OF CALIFORNIA

LICENSED ARCHITECT MARK SCHATZ NO. C 13808 REN. STATE OF CALIFORNIA

DATE OCTOBER 26, 2001

REVISIONS

CONSTRUCTION DOCUMENTS

BID SET

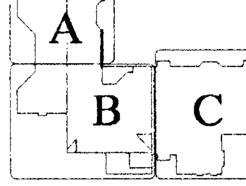

LEGEND AND SCHEDULES

SCALE NONE

DRAWN BY JLW/LK

CHECKED BY DA

JOB NO. 0101

PHASE 2

SHEET NO. **M0.1**

All drawings and written material appearing herein constitute the original and unpublished work of the architect and the same may not be duplicated, used, or disclosed without the written consent of the architect ©Field Paoli

11/02/01 1:47:43 PM F:\C_3000\3024~1.00S\DRAWINGS\3024M01.DWG

AIR OUTLET SCHEDULE

MFR: TITUS (UON)

CODE	MODEL	DESCRIPTION
CSD-1	TDC	LOUVERED FACE CEILING SUPPLY DIFFUSER WITH OBD WHERE NOTED ON PLANS (FOUR-WAY BLOW UNLESS OTHERWISE INDICATED ON PLANS).
CSD-2	PSS	PERFORATED CEILING DIFFUSER WITH ADJUSTABLE "STAR" PATTERN DEFLECTORS IN NECK (STANDARD FOUR-WAY BLOW UNLESS OTHERWISE INDICATED ON PLANS). (A) = 6ø NECK SIZE (6"X6" AT OBSTRUCTIONS - SEE DETAIL 1/M4.2). (B) = 8ø NECK SIZE (8"X8" AT OBSTRUCTIONS - SEE DETAIL 1/M4.2). (C) = 10ø NECK SIZE (10"X10" AT OBSTRUCTIONS - SEE DETAIL 1/M4.2). (D) = 12ø NECK SIZE (12"X12" AT OBSTRUCTIONS - SEE DETAIL 1/M4.2). (E) = 14ø NECK SIZE (14"X14" AT OBSTRUCTIONS - SEE DETAIL 1/M4.2).
LSD-1	TBD-30	PLENUM SLOT LINEAR SUPPLY DIFFUSER WITH (2) 1" WIDE SLOTS, NOMINAL 4'-0" LONG PLENUM AND BORDER TO FIT LAY-IN CEILINGS.
FSR-1	CT-PP-3	LINEAR BAR FLOOR SUPPLY DIFFUSER WITH 7/16" SPACED 7/32" WIDE FACE BARS WITH 30' DEFLECTION, HEAVY DUTY MOUNTING FRAME FOR FLOOR APPLICATIONS, APPROPRIATE FLANGELESS OR CARPET CLAMP BOARDER AND OBD-COLOR/FINISH AS DIRECTED BY ARCHITECT.
CRR-1/ CEG-1/ CTR-1	PAR	PERFORATED FACE CEILING RETURN/EXHAUST/TRANSFER GRILLE.
CRR-2/ CRG-2/ CER-2/ CTG-2	300RL	SINGLE DEFLECTION BAR FACED CEILING RETURN/EXHAUST/TRANSFER REGISTER WITH FIXED BLADES. OMIT OBD AT GRILLE.
CRG-3/ CTG-3	TDC	SAME AS CSD-1
WSR-1/ WSG-1	300RS	DOUBLE DEFLECTION BAR FACED WALL SUPPLY REGISTER WITH ADJUSTABLE VERTICAL FRONT BLADES. OMIT OBD AT GRILLE.
WSG-2	SERIES 1700	REVERSIBLE CORE - NARROW BLADE WALL SUPPLY GRILLE WITH FIXED HORIZONTAL FRONT AND ADJUSTABLE VERTICAL DIRECTIONAL BACK BLADES.
WSG-3	"SEIHO" PK-10 SPOT DIFFUSER	SPHERICAL ADJUSTABLE "FISH-EYE" NOZZLE WALL SUPPLY GRILLE.
WSG-4	FLOWBAR-JET THROW FL-10-JT	LINEAR SLOT WALL SUPPLY GRILLE WITH ADJUSTABLE "JET THROW" PATTERN CONTROLLERS, (1) 1" WIDE SLOT, 5'-0" LONG ACOUSTICALLY LINED PLENUM WITH 10" OVAL CONNECTION, CONCEALED BORDER TYPE 22 AND H3 HARD "CEILING" CLIP FOR GYP. BOARD APPLICATIONS, AND "YOUNG REGULATOR" MODEL 270-275 REMOTE DAMPER OPERATOR CONTROL KIT WITH MOUNTING KIT FOR MOUNTING OPERATOR INSIDE PLENUM AND ENCAPSULATED BOWDEN CONTROL WIRE TO OPERATE REMOTE DAMPER MODEL 5050-CC (PROVIDE ONE MODEL 030-12 OPERATOR WRENCH FOR ENTIRE PROJECT).
WRR-1/ WRG-1/ WEG-1/ WTG-1	300RL	SINGLE DEFLECTION BAR FACED WALL RETURN/EXHAUST/TRANSFER REGISTER WITH FIXED HORIZONTAL BLADES. OMIT OBD AT GRILLE.
WRG-2/ WTG-2	SERIES 1700	REVERSIBLE CORE - NARROW BLADE WALL RETURN/TRANSFER GRILLE.

NOTES: (1) COORDINATE FRAME TYPES WITH ACTUAL CEILING BEING PROVIDED. (SEE ARCHITECTURAL DRAWINGS AND VERIFY WITH GENERAL CONTRACTOR BEFORE SUBMITTING). PROVIDE BORDER TYPE ONE FOR SURFACE MOUNTING IN GYP. BOARD CEILINGS AND NOMINAL 24X24 FACE PLATES FOR LAY-IN OR CONCEALED SPLINE CEILINGS. SPECIAL FRAMES SHALL BE PROVIDED TO FIT NARROW TEE OR CONCEALED SPLINE CEILINGS AND DROP FACES WHERE TILES IN T-BAR CEILINGS HAVE TEGULAR EDGES.

(2) UON, ALL AIR OUTLETS TO BE STEEL CONSTRUCTION WITH OFF-WHITE FINISH. INTERIOR OF PERFORATED PLATE MODELS TO BE FLAT BLACK.

(3) PROVIDE EARTH QUAKE TABS (MIN.2) FOR EACH T-BAR OR CONCEALED SPLINE CEILING MOUNTED AIR OUTLET.

(4) UON, SEE PLANS FOR NECK SIZES.

(5) UON, ALL CEILING RETURN, EXHAUST OR TRANSFER AIR GRILLES SHALL BE TYPE CRG-1, CEG-1 OR CTG-1 WITH 22"X22" NECKS AND ACOUSTICALLY LINED SHEET METAL PLENUMS WITH SIDE DUCT CONNECTIONS (SEE DETAIL 1/M4.2).

(6) ALL CEILING AIR OUTLETS INDICATED WITH ROUND NECKS SHALL BE CHANGED TO AIR OUTLETS WITH EQUIVALENT SQUARE NECKS AND ACOUSTICALLY LINED SHEET METAL PLENUMS WITH SIDE DUCT CONNECTIONS (SEE DETAIL 1/M4.2) WHERE OBSTRUCTIONS EXIST THAT WOULD CAUSE DIRECT ROUND NECK CONNECTIONS TO BECOME KINKED OR HAVE CENTELINE BENDS LESS THAN 1-1/2 DUCT DIAMTERS. ALL AIR OUTLETS SHOWN WITH SIDE CONNECTIONS AND/OR CALLED OUT AS HAVING SQUARE NECKS SHALL HAVE SAME PLENUMS AS CALLED OUT IN DETAIL 1/M4.2.

SOUND TRAP SCHEDULE

MFR: IAC

CODE	SYSTEM	MODEL NO.	LOCATION/SERVICE	CFM	(QTY) AND SIZE (1)	P.D. "WG	REMARKS
ST AC-1S	AC-1	QUIET-DUCT 5 LFM	SUPPLY	16,000	(1) 48X36X5'	0.36"	WEATHERIZED CONSTRUCTION FOR OUTDOOR INSTALLATIONS
ST AC-1R	AC-1	QUIET-DUCT 7 LFL	RETURN	15,000	(1) 48X36X7'	0.13"	WEATHERIZED CONSTRUCTION FOR OUTDOOR INSTALLATIONS
ST AC-2S	AC-2	QUIET-DUCT 5 LFM	SUPPLY	18,000	(1) 48X42X5'	0.33"	WEATHERIZED CONSTRUCTION FOR OUTDOOR INSTALLATIONS
ST AC-2R	AC-2	QUIET-DUCT 7 LFL	RETURN	16,500	(1) 48X36X7'	0.16"	WEATHERIZED CONSTRUCTION FOR OUTDOOR INSTALLATIONS
ST AC-3S	AC-3	QUIET-DUCT 5 LFM	SUPPLY	20,000	(1) 48X42X5'	0.43"	WEATHERIZED CONSTRUCTION FOR OUTDOOR INSTALLATIONS
ST AC-3R	AC-3	QUIET-DUCT 7 LFL	RETURN	18,000	(1) 48X42X7'	0.15"	WEATHERIZED CONSTRUCTION FOR OUTDOOR INSTALLATIONS
ST AC-1AS	AC-1A (ALT. A2)	QUIET-DUCT 3 LFL	SUPPLY	16,000	(1) 48X36X3'	0.14"	(2) WEATHERIZED CONSTRUCTION FOR OUTDOOR INSTALLATIONS
ST AC-1AR	AC-1A (ALT. A2)	QUIET-DUCT 5 LFL	RETURN	15,000	(1) 48X36X5'	0.13"	(2) WEATHERIZED CONSTRUCTION FOR OUTDOOR INSTALLATIONS
ST AC-2AS	AC-2A (ALT. A2)	QUIET-DUCT 3 LFL	SUPPLY	18,000	(1) 48X36X3'	0.18"	(2) WEATHERIZED CONSTRUCTION FOR OUTDOOR INSTALLATIONS
ST AC-2AR	AC-2A (ALT. A2)	QUIET-DUCT 3 LFL	RETURN	16,500	(1) 48X36X3'	0.15"	(2) WEATHERIZED CONSTRUCTION FOR OUTDOOR INSTALLATIONS
ST AC-3AS	AC-3A (ALT. A2)	QUIET-DUCT 5 LFM	SUPPLY	20,000	(1) 48X42X5'	0.43"	(2) WEATHERIZED CONSTRUCTION FOR OUTDOOR INSTALLATIONS
ST AC-3BR	AC-3A (ALT. A2)	QUIET-DUCT 7 LFL	RETURN	18,000	(1) 48X42X7'	0.15"	(2) WEATHERIZED CONSTRUCTION FOR OUTDOOR INSTALLATIONS
ST SFP 1-2	AC-1	QUIET-DUCT 3 LFL	SFP 1-2	2190	(1) 24X12X3'	0.10"	
ST SFP 1-3	AC-1	QUIET-DUCT 5 LFS	SFP 1-3	1600	(1) 24X24X5'	0.10"	
ST SFP 1-4	AC-1	QUIET-DUCT 3 LFL	SFP 1-4	1600	(1) 12X18X3'	0.08"	
ST SFP 1-5	AC-1	QUIET-DUCT 3 LFL	SFP 1-5	2440	(1) 24X18X3'	0.05"	
ST SFP 1-6	AC-1	QUIET-DUCT 3 LFL	SFP 1-6	2280	(1) 12X24X3'	0.10"	
ST SFP 1-9	AC-1	QUIET-DUCT 3 LFL	SFP 1-9	1700	(1) 12X18X3'	0.10"	
ST SFP 2-1	AC-2	QUIET-DUCT 3 LFL	SFP 2-1	1100	(1) 12X18X3'	0.04"	
ST SFP 2-2	AC-2	QUIET-DUCT 5 LFM	SFP 2-2	1880	(1) 24X24X5'	0.04"	
ST SFP 2-3	AC-2	QUIET-DUCT 5 LFM	SFP 2-3	1820	(1) 24X24X5'	0.04"	
ST SFP 2-4	AC-2	QUIET-DUCT 5 LFM	SFP 2-4	1840	(1) 24X24X5'	0.04"	
ST SFP 3-2	AC-3	QUIET-DUCT 5 LFM	SFP 3-2	1500	(1) 24X18X5'	0.05"	
ST SFP 3-3	AC-3	QUIET-DUCT 5 LFM	SFP 3-3	1700	(1) 24X18X5'	0.08"	
ST SFP 3-4	AC-3	QUIET-DUCT 5 LFM	SFP 3-4	1920	(1) 24X18X5'	0.09"	

NOTES: (1) VARY HEIGHTS AND WIDTHS OF SOUND TRAPS TO SUIT ACTUAL CONDTIONS (MAINTAIN SAME CORSS-SECTIONAL AREAS) - LENGTHS ARE TO REMAIN THE SAME.

(2) ALTERNATIVE SOUND TRAPS FOR ALTERNATE McQUAY AC UNITS - PRICE AS PART OF ADD ALTERNATE A2.

11/02/01 1:48:15 PM F:\C_3000\3024~1.00S\DRAWINGS\3024M02.DWG

SERIES FAN POWERED TERMINAL BOX SCHEDULE

MFR: TITUS MODEL PTQS

CODE	SIZE	CFM SETTING FAN/MAX. COOLING	CFM SETTING MIN. COOLING	DOWNSTREAM ESP IN W.G.	DUCT CONNECTIONS SA INLET (INCHES)	DUCT CONNECTIONS SA OUTLET (INCHES)	DUCT CONNECTIONS RA INLET (INCHES)	REHEAT COIL DATA E.A.T. °F	REHEAT COIL DATA E.W.T. °F	REHEAT COIL DATA GPM	REHEAT COIL DATA ROWS	REHEAT COIL DATA TOTAL MBH (1)	ELECTRICAL (2) MOTOR HP	ELECTRICAL (2) FLA	ELECTRICAL (2) VOLTS/PHASE	AC-	SA RESET SIGNAL	DISCH. DUCT/ PLENUM (3) W X H X L X THICKNESS (1" UON)	RA PLENUM (4)	REMARKS
SFP 1-1	6	1900	500	0.55	14"ø	20X15	21X17.5	55.0	180	1.0	1	37.8	3/4	5.4	277/1	1	N	20 X 14 X 15'-0"	21 X 17.5 X 7'-0"	
SFP 1-2	7	2190	500	0.60	14"ø	20X15	21X17.5	55.0	180	0.5	1	20.0	1	6.5	277/1	1	N	SEE SOUND TRAP SCHED.	21 X 17.5 X 7'-0"	
SFP 1-3	5	1600	350	0.35	12"ø	20X15	21X17.5	55.0	180	1.5	1	42.1	1/3	10.0	120/1	1	Y	SEE SOUND TRAP SCHED.	21 X 17.5 X 7'-0"	
SFP 1-4	6	1600	350	0.45	12"ø	20X15	21X17.5	55.0	180	1.0	1	36.0	3/4	5.4	277/1	1	Y	SEE SOUND TRAP SCHED.	21 X 17.5 X 7'-0"	
SFP 1-5	7	2440	650	0.40	16"ø	20X15	21X17.5	55.0	180	1.5	1	49.2	1	6.5	277/1	1	Y	SEE SOUND TRAP SCHED.	21 X 17.5 X 7'-0"	
SFP 1-6	7	2280	500	0.40	14"ø	20X15	21X17.5	55.0	180	0.5	1	23.5	1	6.5	277/1	1	N	SEE SOUND TRAP SCHED.	21 X 17.5 X 7'-0"	
SFP 1-7	5	1160	350	0.60	12"ø	20X15	21X17.5	55.0	180	1.0	1	32.5	1/3	10.0	120/1	1	N	16 X 12 X 15'-0"	21 X 17.5 X 7'-0"	
SFP 1-8	5	1300	350	0.52	12"ø	20X15	21X17.5	55.0	180	0.5	1	19.3	1/3	10.0	120/1	1	N	18 X 12 X 15'-0"	21 X 17.5 X 7'-0"	
SFP 1-9	6	1700	500	0.45	14"ø	20X15	21X17.5	55.0	180	1.0	1	36.8	3/4	5.4	277/1	1	Y	SEE SOUND TRAP SCHED.	21 X 17.5 X 7'-0"	
SFP 2-1	3	1100	300	0.40	10"ø	16X13	13¼X14½	55.0	180	0.5	1	12.8	1/4	7.0	120/1	2	Y	12 X 18 x 5'-0" + TRAP	14 X 16 X 7'-0"	
SFP 2-2	6	1880	500	0.40	14"ø	20X15	21X17.5	55.0	180	0.5	1	21.4	3/4	5.4	277/1	2	Y	SEE SOUND TRAP SCHED.	21 X 17.5 X 7'-0"	
SFP 2-3	6	1820	500	0.45	14"ø	20X15	21X17.5	55.0	180	2.0	1	50.0	3/4	5.4	277/1	2	N	SEE SOUND TRAP SCHED.	NA	
SFP 2-4	6	1840	500	0.50	14"ø	20X15	21X17.5	55.0	180	1.0	1	37.5	3/4	5.4	277/1	2	N	SEE SOUND TRAP SCHED.	NA	
SFP 2-5	7	1800	500	0.60+	14"ø	20X15	21X17.5	55.0	180	2.0	1	48.5	1	6.5	277/1	2	N	24 X 36 X 4'-0" X 4"	NA	
SFP 2-6	7	2200	500	0.60	14"ø	20X15	21X17.5	55.0	180	2.0	1	52.0	1	6.5	277/1	2	N	24 X 36 X 4'-0" X 4"	NA	
SFP 2-7	6	1280	350	0.60	12"ø	20X15	21X17.5	55.0	180	2.0	1	42.8	3/4	5.4	277/1	2	Y	24 X 36 X 4'-0" X 4"	NA	
SFP 3-1	6	1620	350	0.60	12"ø	20X15	13¼X14½	55.0	180	1.0	2	52.9	3/4	5.4	277/1	3	Y	18 X 14 X 15'-0" X 2"	21 X 17.5 X 7'-0"	
SFP 3-2	6	1500	350	0.50	12"ø	20X15	21X17.5	55.0	180	1.0	2	52.1	3/4	5.4	277/1	3	N	SEE SOUND TRAP SCHED.	21 X 17.5 X 7'-0"	
SFP 3-3	6	1700	350	0.50	12"ø	20X15	21X17.5	55.0	180	1.0	2	53.4	3/4	5.4	277/1	3	Y	SEE SOUND TRAP SCHED.	21 X 17.5 X 7'-0"	
SFP 3-4	7	1920	500	0.50	14"ø	20X15	21X17.5	55.0	180	1.0	2	54.4	1	6.5	277/1	3	N	SEE SOUND TRAP SCHED.	21 X 17.5 X 7'-0"	
SFP 3-5	7	1950	1000	0.60	14"ø	20X15	21X17.5	55.0	180	1.0	2	54.6	1	6.5	277/1	3	N	26 X 12 X 25'-0" X 2"	18 X 20 X 22'-0" (SHARED W/SFP 3-5)	
SFP 3-6	6	1750	1000	0.60	14"ø	20X15	21X17.5	55.0	180	1.0	1	37.0	3/4	5.4	277/1	3	Y	26 X 12 X 25'-0" X 2"	18 X 20 X 22'-0" (SHARED W/SFP 3-6)	
SFP 3-7	6	1740	500	0.60	14"ø	20X15	21X17.5	55.0	180	1.0	1	36.9	3/4	5.4	277/1	3	N	20 X 15 X 8'-0"	21 X 17.5 X 7'-0"	
SFP 3-8	5	1200	350	0.57	12"ø	20X15	21X17.5	55.0	180	2.0	1	41.2	1/3	10.0	120/1	3	Y	20 X 15 X 20'-0"	21 X 17.5 X 7'-0"	
SFP 3-9	5	1120	300	0.60	10"ø	20X15	21X17.5	55.0	180	1.0	1	32.3	1/3	10.0	120/1	3	Y	20 X 15 X 20'-0"	21 X 17.5 X 7'-0"	
SFP 3-10	6	1450	350	0.60	12"ø	20X15	21X17.5	55.0	180	2.0	1	44.5	3/4	5.4	277/1	3	Y	20 X 15 X 15'-0" X 2"	21 X 17.5 X 7'-0"	
SFP 3-11	3	825	200	0.50	9"ø	16X13	13¼X14½	55.0	180	0.5	1	11.8	1/4	7.0	120/1	3	N	16 X 13 X 20'-0"	14 X 16 X 7'-0"	
SFP 3-12	4	1050	300	0.50	10"ø	16X13	13¼X14½	55.0	180	1.0	1	24.8	1/3	9.8	120/1	3	Y	16 X 13 X 20'-0"	14 X 16 X 7'-0"	

NOTES:
(1) HEATING CAPACITIES ARE GIVEN AT MINIMUM COOLING CFM AND FULL UNIT SUPPLY AIR QUANTITY.
(2) UNIT FAN MOTOR FLA'S ARE GIVEN AT HIGH SPEED. PROVIDE ALL UNITS WITH MANUFACTURER'S SOLD STATE SPEED CONTROLLERS (TO BE MOUNTED ON SIDE OF UNIT-NOT TO BE USED FOR UNIT DISCONNECT SWITCH).
(3) PROVIDE SHOP FABRICATED DISCHARGE DUCTS/PLENUMS WITH 1" THICK (UON) AL AND MINIMUM DIMENSIONS LISTED - LENGHTS ARE TO FIRST BRANCH DUCT CONNECTION. SEE PLANS FOR MANDITORY ELBOWS (HEEL SIDE COUNTS FOR MINIMUM LENGTH - DO NOT USE TURNING VANES).
(4) PROVIDE SHOP FABRICATED RETURN AIR DUCTS/PLENUMS WITH 2" THICK AL AND MINIMUM DIMENSIONS LISTED. SEE PLANS FOR MANDITORY ELBOWS (HEEL SIDE COUNTS FOR MINIMUM LENGTH - DO NOT USE TURNING VANES).
(5) SUBMIT ACOUSTICAL SOUND DATA FOR ANY SUBSTITUES (TO BE COMPARED TO EXISTING STANDARD).
(6) SEE SPECIFICATIONS FOR ADDITIONAL REQUIREMENTS INCLUDING CONTROLS.

VAV TERMINAL BOX SCHEDULE

MFR: TITUS MODEL PESV

CODE	CFM SETTING MAX.	CFM SETTING MIN.	DUCT CONNECTION INLET (INCHES)	DUCT CONNECTION OUTLET (INCHES)	REHEAT COIL DATA E.A.T. °F	REHEAT COIL DATA E.W.T. °F	REHEAT COIL DATA GPM	REHEAT COIL DATA ROWS	REHEAT COIL DATA TOTAL MBH (1)	AC-	SA RESET SIGNAL	PLENUM (2) W x H x L	REMARKS
VAV 1-1	900	300	10"ø	14X12-1/2	55.0	180	2.0	2	27.9	1	Y	14 X 12 X 15'-0"	
VAV 1-2	1350	500	14"ø	20X17-1/2	55.0	180	2.0	2	34.4	1	Y	18 X 12 X 15'-0"	
VAV 2-1	840	200	10"ø	14X12-1/2	55.0	180	1.0	1	10.0	2	N	14 X 12-1/2 X 8'-0"	
VAV 2-2	450	175	8"ø	12X10	55.0	180	1.0	2	21.0	2	Y	12 X 10 X 4'-0"	
VAV 2-3	1570	500	14"ø	20X17-1/2	55.0	180	2.0	1	23.5	2	Y	18 X 15-1/2 X 6'-0"	
VAV 2-4	880	300	10"ø	14X12-1/2	55.0	180	2.0	2	22.4	2	N	14 X 12-1/2 X 4'-0"	
VAV 2-5	1600	500	14"ø	20X17-1/2	55.0	180	2.0	1	23.5	2	N	20 X 17-1/2 X 6'-0"	
VAV 2-6	900	300	10"ø	14X12-1/2	55.0	180	2.0	2	24.4	2	Y	14 X 12-1/2 X 4'-0"	
VAV 2-7	450	125	7"ø	12X10	55.0	180	1.0	1	7.5	2	N	12 X 10 X 15'-0"	
VAV 2-8	1475	350	12"ø	16X15	55.0	180	2.0	1	17.3	2	N	16 X 15 X 4'-0"	
VAV 2-9	700	0	8"ø	12X10	–	–	–	–	–	2	N	NA	
VAV 3-1	700	200	8"ø	12X10	–	–	–	–	–	3	N	14 X 12 X 4'-0"	
VAV 3-2	200	75	5"ø	12X8	55.0	180	1.0	1	5.0	3	N	12 X 10 X 5'-0"	
VAV 3-3	760	200	9"ø	14X12-1/2	55.0	180	1.0	1	11.7	3	Y	14 X 12-1/2 X 4'-0"	
VAV 3-4	300	75	5"ø	12X8	–	–	–	–		3	N	12 X 12 X 6'-0"	
VAV 3-5	300	75	5"ø	12X8	–	–	–	–		3	N	NA	
VAV 3-6	1520	500	14"ø	20X17-1/2	55.0	180	2.0	1	23.5	3	N	20 X 17-1/2 X 5'-0"	
VAV 3-7	1140	350	12"ø	16X15	55.0	180	2.0	1	17.3	3	N	16 X 15 X 5'-0"	
VAV 3-8	600	0	8"ø	12X10	–	–	–	–		3	N	NA	

NOTES:
(1) HEATING CAPACITIES ARE GIVEN AT MIMIMUM CFM AIR FLOW QUANTITES LISTED.
(2) PROVIDE SHOP FABRICATED PLENUMS WITH 1" THK. AL AND MINIMUM DIMENSIONS LISTED - LENGTHS ARE TO FIRST BRANCH DUCT CONNECTION. SEE PLANS FOR MANDITORY ELBOWS (HEEL SIDE COUNTS FOR MINIMUM LENGTH-DO NOT USE TURNING VANES).
(3) UNIT AIR PRESSURE DROP NOT TO EXCEED 0.5" STATIC (VALVE AND COIL ONLY).
(4) SEE PLANS FOR LEFT OR RIGHT HAND CONTROLS (TO BE VERIFIED IN SHOP DRAWING PHASE).
(5) SEE SPECIFICATIONS FOR ADDITIONAL REQUIREMENTS INCLUDING CONTROLS.

FIELD PAOLI

Architecture
1045 Sansome St.
Suite 206
San Francisco
California, 94111
Tel. 415. 788. 6606
Fax 415. 788. 6650

SARATOGA LIBRARY

SANTA CLARA COUNTY LIBRARY

13650 Saratoga Avenue
Saratoga, California 95070

MECHANICAL DESIGN STUDIO inc
3330 Clayton Rd. Suite B
Concord California 94519-2838
tel 925. 680 6858
fax 925. 680 4348
www.mds-sf.com
PROJECT # 3024.00

REGISTERED PROFESSIONAL ENGINEER DOREL ANGHEL No M 26561 Expires 9/30/02 MECHANICAL STATE OF CALIFORNIA

LICENSED ARCHITECT NO. C 13308 REN. STATE OF CALIFORNIA

DATE OCTOBER 26, 2001

REVISIONS

CONSTRUCTION DOCUMENTS
BID SET

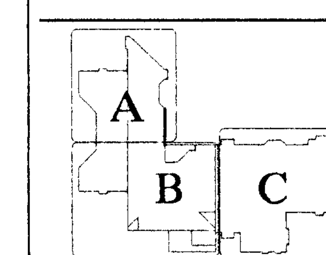

SCHEDULES CONTINUED

SCALE NONE
DRAWN BY JLW/LK
CHECKED BY DA
JOB NO. 0101

PHASE 2

SHEET NO. **M0.2**

All drawings and written material appearing herein constitute the original and unpublished work of the architect and the same may not be duplicated, used, or disclosed without the written consent of the architect ©Field Paoli

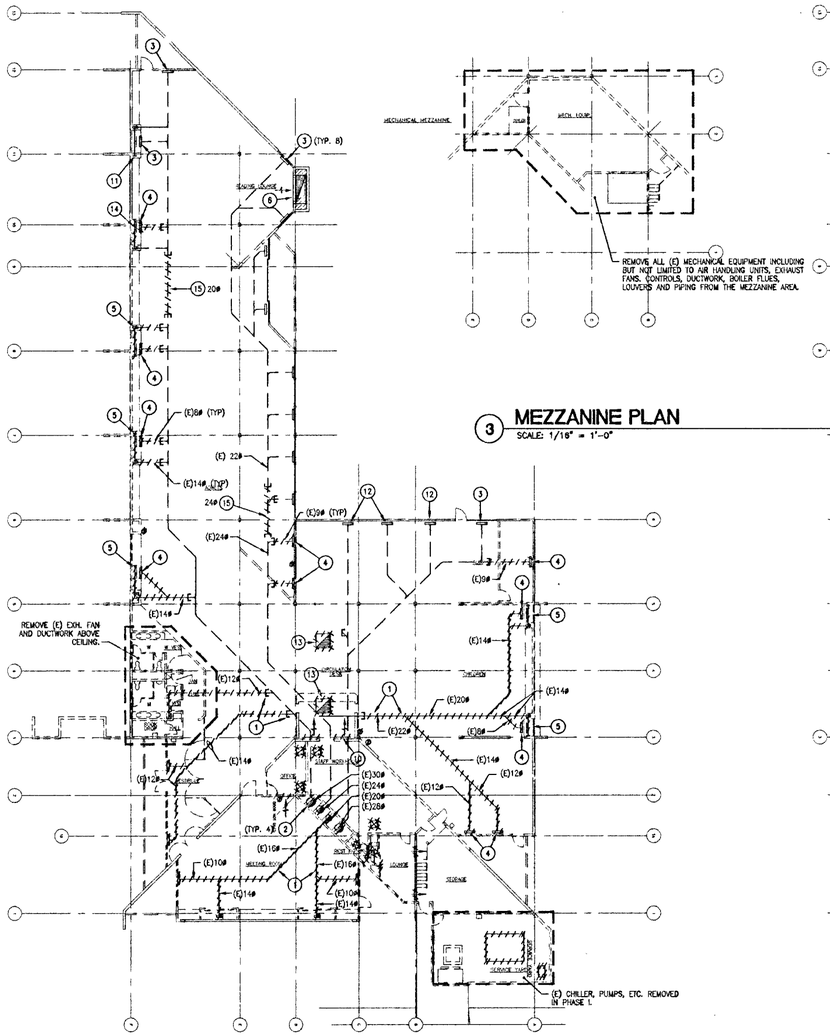

2 FLOOR PLAN
SCALE: 1/16" = 1'-0"

3 MEZZANINE PLAN
SCALE: 1/16" = 1'-0"

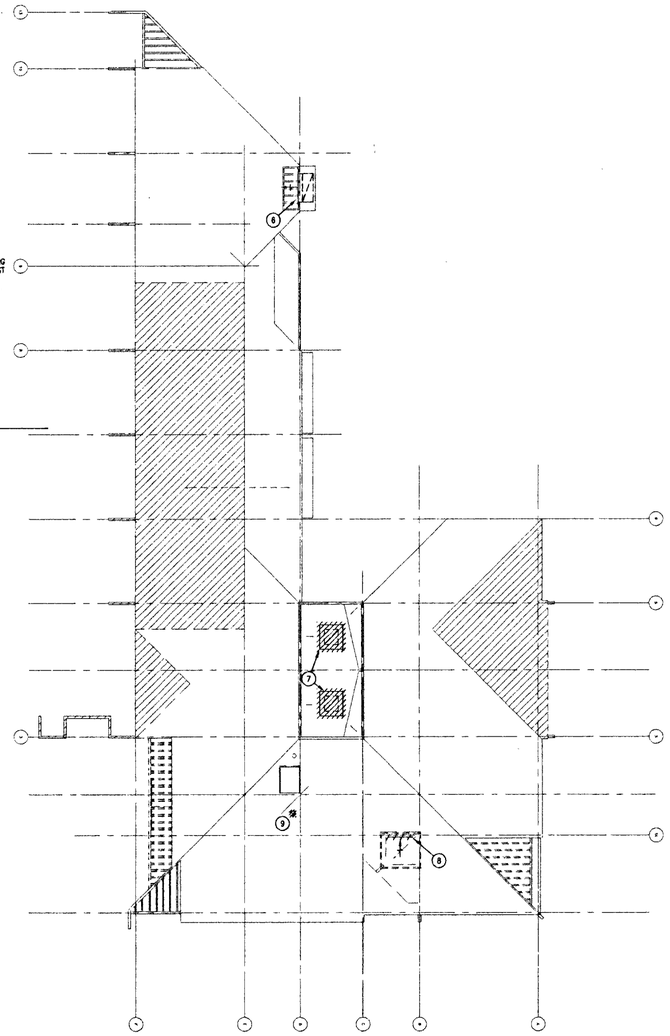

1 ROOF PLAN
SCALE: 1/16" = 1'-0"

SHEET NOTES

1. REMOVE (E) UNDERGROUND SA DUCT TO THE EXTENT ALLOWED BY DEMOLITION WORK OF OTHER TRADES – ANY REMAINING DUCT SHALL BE FILLED WITH CONCRETE, CAPPED BELOW (N) FLOOR FINISH AND ABANDONED IN PLACE.
2. REMOVE (E) DUCT RISERS TO MECHANICAL MEZZANINE ABOVE.
3. (E) FLOOR SA REGISTER BRANCH DUCT TO BE REUSED.
4. REMOVE (E) FLOOR SA REGISTER AND ASSOCIATED SA DUCT TO THE EXTENT ALLOWED BY THE DEMOLITION WORK OF OTHER TRADES – ANY REMAINING DUCT SHALL BE CAPPED BELOW (N) FLOOR FINISH AND ABANDONED IN PLACE.
5. REMOVE (E) SOFFIT MOUNTED SIDEWALL SA REGISTER AND ASSOCIATED SA DUCT TO THE EXTENT ALLOWED BY THE DEMOLITION WORK OF OTHER TRADES – ANY REMAINING DUCT SHALL BE CAPPED BELOW (N) FLOOR FINISH AND ABANDONED IN PLACE.
6. REMOVE (E) BOD AT RELIEF AIR LOUVER ABOVE ROOF – (E) SIDEWALL GRILLE, RELIEF AIR DUCT AND LOUVER TO REMAIN.
7. REMOVE (E) GRAVITY RELIEF AIR HOOD (AND ASSOCIATED CURB IF DAMAGED – TO BE REPLACED WITH NEW IN PHASE 2 CONSTRUCTION – SEE M2.1B AND M3.1).
8. REMOVE (E) OA LOUVER.
9. REMOVE (E) BOILER FLUE.
10. REMOVE (E) SIDEWALL SA REGISTERS – 144X36 RA GRILLE AND ASSOCIATED SOUND TRAP ABOVE (NOT SHOWN) TO BE REUSED. PROVIDE (N) SUPPORTS FOR (E) SOUND TRAP IF (E) SUPPORTS ARE BEING REMOVED DUE TO DEMOLITION OF (E) MEZZANINE.
11. (E) SOFFIT MOUNTED SIDEWALL SA REGISTER AND ASSOCIATED DUCT TO BE REUSED.
12. SHT. MTL. FLOOR REGISTER BOOT AND ASSOCIATED FRP DUCT PROVIDED UNDER PHASE 1.
13. REMOVE (E) ±48X48 RELIEF AIR DUCT UP THRU ROOF (TO BE REPLACED WITH NEW DUCT IN PHASE 2 CONSTRUCTION – SEE M2.1B).
14. REMOVE (E) SOFFIT MOUNTED SIDEWALL SA REGISTER AND ASSOCIATED SA DUCT TO THE EXTENT REQUIRED BY THE DEMOLITION WORK OF OTHER TRADES AND PROVIDE TEMPORARY CAP – REMAINING DUCT SHALL BE EXTENDED IN PHASE 2 CONSTRUCTION (SEE M2.1A).
15. REMOVE (E) UNDERGROUND SA DUCT TO ALLOW FOR (N) STRUCTURAL FOOTING AND PROVIDE TEMPORARY CAPS – DUCT SHALL BE REROUTED IN PHASE 2 CONSTRUCTION (SEE M2.1A AND M2.1B).

GENERAL NOTES

1. EXISTING UNDERGROUND DUCTS ARE ENCASED IN CONCRETE. CONTRACTOR SHALL TAKE ADDITIONAL CARE NOT TO DAMAGE REMAINING ENDS OF DUCTS WHICH ARE TO EITHER BE EXTENDED OR CAPPED AS NOTED.

TRUE NORTH
PROJ. NORTH

FIELD PAOLI

Architecture
1045 Sansome St.
Suite 206
San Francisco
California, 94111
Tel. 415. 788. 6606
Fax 415. 788. 6650

SARATOGA LIBRARY

SANTA CLARA COUNTY LIBRARY

13650 Saratoga Avenue
Saratoga, California 95070

MECHANICAL DESIGN STUDIO Inc
3330 Clayton Rd. Suite B
Concord California 94519-2638
tel 925. 680 6808
fax 925. 680 4348
www.mds-ef.com
PROJECT # 3024.00

REGISTERED MECHANICAL ENGINEER
NO. E 13808
REN.
STATE OF CALIFORNIA

DATE	JANUARY 25, 2002
REVISIONS	
	CONSTRUCTION DOCUMENTS
	BID SET
1 ADDENDUM NO. 4	12/27/01
	CONFORM SET RE-PLOT

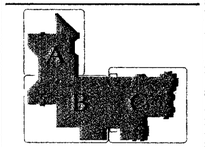

DEMOLITION PLANS

SCALE	1/16" = 1'-0"
DRAWN BY	JLW/LK
CHECKED BY	DA
JOB NO.	0101

PHASE 2

SHEET NO. **M1.1**

All drawings and written material appearing herein constitute the original and unpublished work of the architect and the same may not be duplicated, used, or disclosed without the written consent of the architect ©Field Paoli

01/28/02 1:27:15 PM F:\C_3000\3024.00 SARATOGA LIBRARY\DRAWINGS\3024M11.DWG

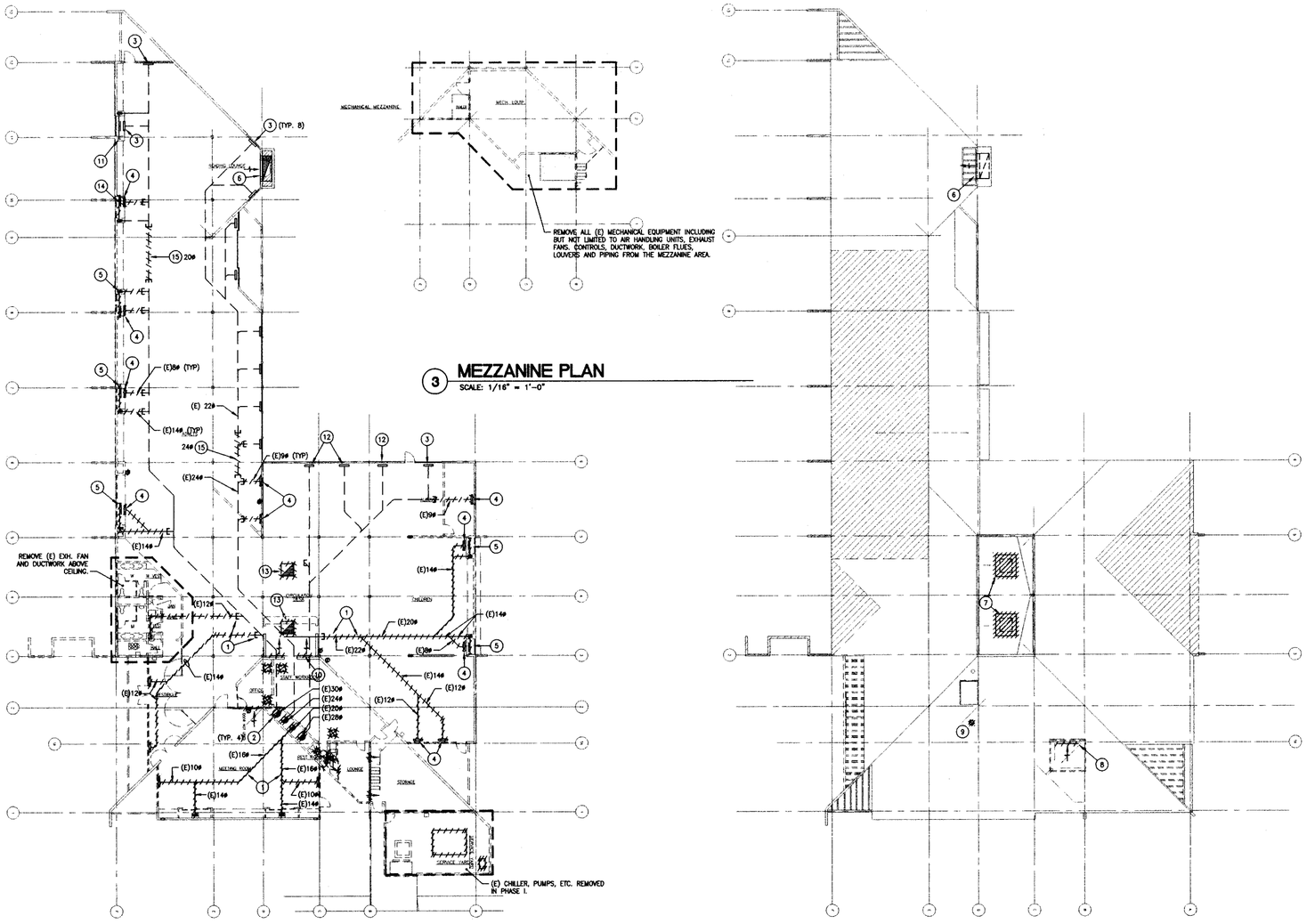

3 MEZZANINE PLAN
SCALE: 1/16" = 1'-0"

2 FLOOR PLAN
SCALE: 1/16" = 1'-0"

1 ROOF PLAN
SCALE: 1/16" = 1'-0"

SHEET NOTES

1. REMOVE (E) UNDERGROUND SA DUCT TO THE EXTENT ALLOWED BY DEMOLITION WORK OF OTHER TRADES – ANY REMAINING DUCT SHALL BE FILLED WITH CONCRETE, CAPPED BELOW (N) FLOOR FINISH AND ABANDONED IN PLACE.
2. REMOVE (E) DUCT RISERS TO MECHANICAL MEZZANINE ABOVE.
3. (E) FLOOR SA REGISTER BRANCH DUCT TO BE REUSED.
4. REMOVE (E) FLOOR SA REGISTER AND ASSOCIATED SA DUCT TO THE EXTENT ALLOWED BY THE DEMOLITION WORK OF OTHER TRADES – ANY REMAINING DUCT SHALL BE CAPPED BELOW (N) FLOOR FINISH AND ABANDONED IN PLACE.
5. REMOVE (E) SOFFIT MOUNTED SIDEWALL SA REGISTER AND ASSOCIATED SA DUCT TO THE EXTENT ALLOWED BY THE DEMOLITION WORK OF OTHER TRADES – ANY REMAINING DUCT SHALL BE CAPPED BELOW (N) FLOOR FINISH AND ABANDONED IN PLACE.
6. REMOVE (E) BDD AT RELIEF AIR LOUVER ABOVE ROOF – (E) SIDEWALL GRILLE, RELIEF AIR DUCT AND LOUVER TO REMAIN.
7. REMOVE (E) GRAVITY RELIEF AIR HOOD (AND ASSOCIATED CURB IF DAMAGED – TO BE REPLACED WITH NEW IN PHASE 2 CONSTRUCTION – SEE M2.1B AND M3.1).
8. REMOVE (E) OA LOUVER.
9. REMOVE (E) BOILER FLUE.
10. REMOVE (E) SIDEWALL SA REGISTERS – 144X36 RA GRILLE AND ASSOCIATED SOUND TRAP ABOVE (NOT SHOWN) TO BE REUSED. PROVIDE (N) SUPPORTS FOR (E) SOUND TRAP IF (E) SUPPORTS ARE BEING REMOVED DUE TO DEMOLITION OF (E) MEZZANINE.
11. (E) SOFFIT MOUNTED SIDEWALL SA REGISTER AND ASSOCIATED DUCT TO BE REUSED.
12. SHT. MTL. FLOOR REGISTER BOOT AND ASSOCIATED FRP DUCT PROVIDED UNDER PHASE I.
13. REMOVE (E) ±48X48 RELIEF AIR DUCT UP THRU ROOF (TO BE REPLACED WITH NEW DUCT IN PHASE 2 CONSTRUCTION – SEE M2.1B).
14. REMOVE (E) SOFFIT MOUNTED SIDEWALL SA REGISTER AND ASSOCIATED SA DUCT TO THE EXTENT REQUIRED BY THE DEMOLITION WORK OF OTHER TRADES AND PROVIDE TEMPORARY CAP – REMAINING DUCT SHALL BE EXTENDED IN PHASE 2 CONSTRUCTION (SEE M2.1A).
15. REMOVE (E) UNDERGROUND SA DUCT TO ALLOW FOR (N) STRUCTURAL FOOTING AND PROVIDE TEMPORARY CAPS – DUCT SHALL BE REROUTED IN PHASE 2 CONSTRUCTION (SEE M2.1A AND M2.1B).

GENERAL NOTES

1. EXISTING UNDERGROUND DUCTS ARE ENCASED IN CONCRETE. CONTRACTOR SHALL TAKE ADDITIONAL CARE NOT TO DAMAGE REMAINING ENDS OF DUCTS WHICH ARE TO EITHER BE EXTENDED OR CAPPED AS NOTED.

TRUE NORTH
PROJ. NORTH

FIELD PAOLI

Architecture
1045 Sansome St.
Suite 206
San Francisco
California, 94111
Tel. 415. 788. 6606
Fax 415. 788. 6650

SARATOGA LIBRARY

SANTA CLARA COUNTY LIBRARY

13650 Saratoga Avenue
Saratoga, California 95070

MECHANICAL DESIGN STUDIO inc
3330 Clayton Rd. Suite B
Concord California 94519-2638
tel 925. 680 6858
fax 925. 680 4344
www.mds-ae.com
PROJECT # 3024.00

DATE	JANUARY 25, 2002
REVISIONS	
	CONSTRUCTION DOCUMENTS
	BID SET
1 ADDENDUM NO. 4	12/27/01
	CONFORM SET RE-PLOT

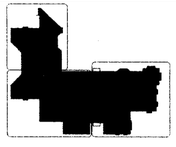

DEMOLITION PLANS

SCALE	1/16" = 1'-0"
DRAWN BY	JLW/LK
CHECKED BY	DA
JOB NO.	0101

PHASE 2

SHEET NO. **M1.1**

All drawings and written material appearing herein constitute the original and unpublished work of the architect and the same may not be duplicated, used, or disclosed without the written consent of the architect ©Field Paoli

01/28/02 1:27:15 PM F:\C_3000\3024.00 SARATOGA LIBRARY\DRAWINGS\3024M11.DWG

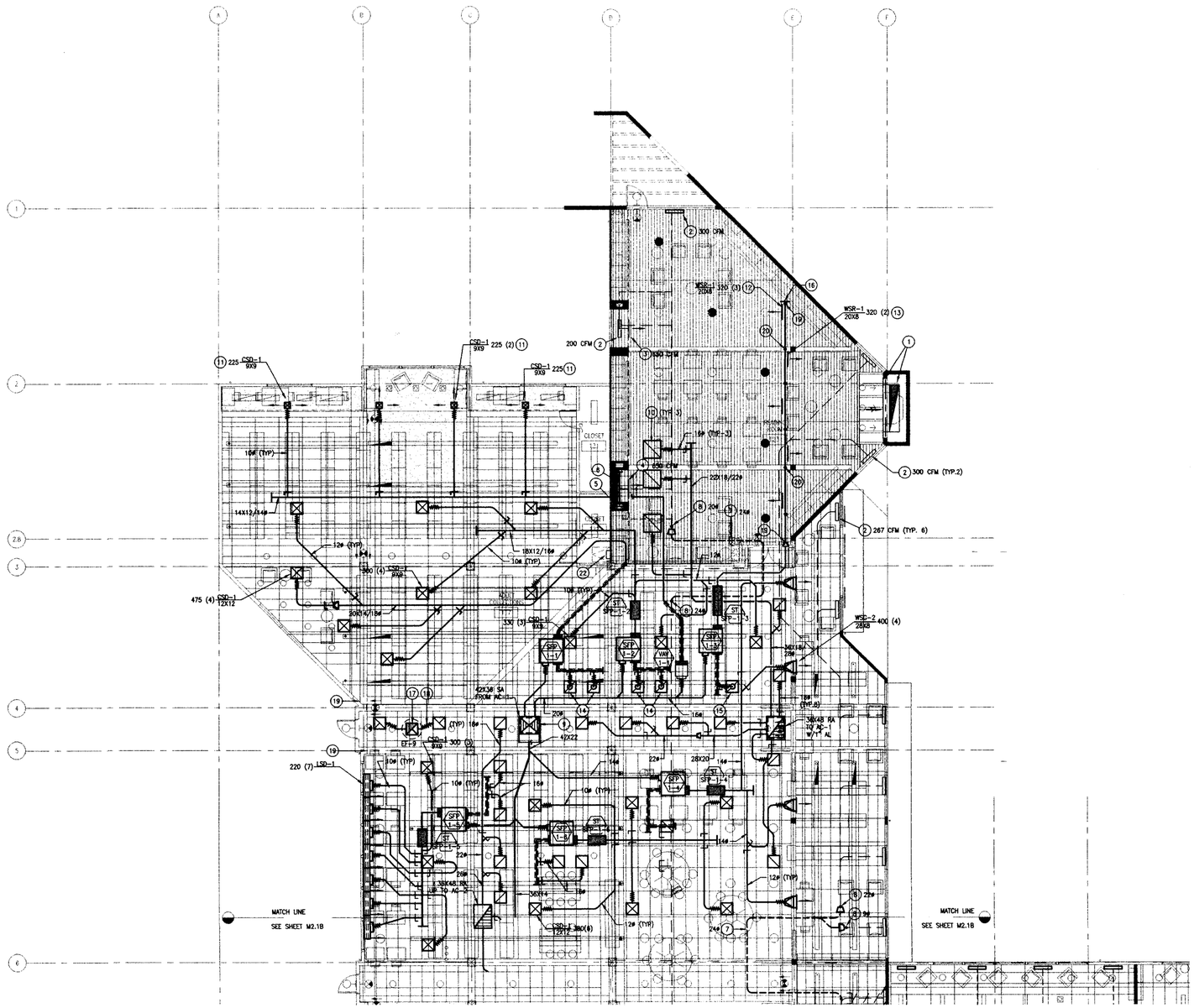

1 FLOOR PLAN - HVAC - NORTH
SCALE: 1/8" = 1'-0"

GENERAL NOTES

1. UON, MEDIUM PRESSURE SA BRANCH CONNECTIONS TO TERMINAL BOXES SHALL BE SAME SIZE AS BOX INLET CONNECTION. PROVIDE REDUCING TRANSITIONS AT BOX CONNECTION IF INDICATED BRANCH DUCT SIZE IS LARGER THAN BOX INLET.
2. DUCTWORK DRAWINGS ARE DIAGRAMMATIC AND DUCT OFFSETS ARE NOT SHOWN. DUCT SIZES ARE MINIMUMS REQUIRED FOR AIR FLOW. THE CONTRACTOR SHALL PROVIDE ALL NECESSARY DUCT OFFSETS AND CHANGE RATIO/SHAPE (BUT NOT EQUIVALENT AREAS) OF DUCTS AS REQUIRED IN ORDER TO CLEAR THE WORK OF ALL OTHER TRADES AND FIT IN THE CEILING SPACES PROVIDED. SOME DUCT SIZES LISTED ARE FOR BOTH RECTANGULAR AND ROUND; ANY DUCTS EXCEPT WHERE CALLED OUT TO BE "EXPOSED" CAN BE MADE EITHER RECTANGULAR OR ROUND BASED ON THE AVAILABLE SPACE.
3. PROVIDE REDUCING TRANSITION DUCTS AT CONNECTIONS TO DISCHARGES OF TERMINAL BOXES AND DUCT MOUNTED SOUND TRAPS. SEE TERMINAL BOX SCHEDULE FOR ACOUSTICALLY LINED DISCHARGE DUCT/PLENUM SIZES FOR BOXES WITHOUT SOUND TRAPS. (NOTE – MIN. DUCT/PLENUM LENGTHS IN SCHEDULES REFER TO DISTANCE TO FIRST BRANCH DUCT TAKE-OFF.) UON, DISCHARGE DUCTS/PLENUMS SHALL BE SAME SIZE AS ASSOCIATED SOUND TRAPS FOR BOXES WITH SOUND TRAPS.
4. INDIVIDUAL DUCT BRANCHES TO SUPPLY AIR OUTLETS IN ALL PUBLIC AREAS SHALL BE A MINIMUM OF 10'-0" IN LENGTH WITH THE ASSOCIATED BALANCING DAMPER AT THE CONNECTION TO THE MAIN DUCT. FLEX DUCT CONNECTIONS TO AIR OUTLETS SHALL BE MADE WITH A MINIMUM OF 3'-0" LONG AND A MAXIMUM OF 5'-0" LONG ACOUSTICAL DUCT.
5. UON, BRANCH DUCTS TO INDIVIDUAL SUPPLY AIR OUTLETS SHALL BE SAME SIZE AS INDICATED AIR OUTLET NECK SIZE.
6. UON, CEILING RETURN AND EXHAUST GRILLES INDICATED WITH CENTER ROUND DUCT CONNECTIONS SHALL HAVE SAME NECK SIZES AS INDICATED FOR THEIR ASSOCIATED BRANCH DUCTS.
7. PROVIDE NEOPRENE TYPE FLEX DUCT CONNECTIONS FOR DISCHARGE DUCT AND RETURN/INDUCTION AIR DUCT CONNECTIONS TO ALL FAN POWERED TERMINAL BOXES.
8. COORDINATE ALL EXPOSED CONTROLS SUCH AS THERMOSTATS AND EXHAUST FAN SWITCHES, ETC. WITH ARCHITECT BEFORE INSTALLING (NOTE – SEE HVAC PIPING PLANS FOR PNEUMATIC TERMINAL BOX T'STAT LOCATIONS).
9. PENETRATE ALL DRAFT STOPS AND FULL HEIGHT WALLS WHICH ACT AS DRAFT STOPS WITH RIGID SHEET METAL DUCT – DO NOT USE FLEX (SEE ARCHITECTURAL FLOOR PLANS AND REFLECTED CEILING PLANS FOR LOCATIONS).

SHEET NOTES

1. REUSE (E) 110X30 RELIEF AIR GRILLE AND DUCT TO 110X30 LOUVER ABOVE – PROVIDE (N) RUSKIN MODEL CD-36 FULL-SIZE LOW LEAKAGE CONTROL DAMPER WITH 110V/1# ACTUATOR BEHIND (E) RELIEF AIR GRILLE (TO BE CONTROLLED BY MANUAL BY-PASS TIMER AT TCP-1).
2. REPLACE (E) FLOOR SA REGISTER WITH (N) REGISTER AND DIRECT AIR FLOW TOWARDS WINDOW.
3. REUSE (E) SIDEWALL SA REGISTER IN (E) WOOD SOFFIT-PROVIDE (N) REGISTER IF (E) IS DAMAGED OR MARKED.
4. (R) SIDEWALL SA REGISTER IN (N)/(E) WOOD SOFFIT-PROVIDE (N) REGISTER IF (E) IS DAMAGED OR MARKED.
5. CTE 16X8 SA BRANCH DUCT INSIDE (E) CHASE.
6. (N) 16X8 SA BRANCH DUCT IN (N)/(E) SOFFIT TO (R) SA SIDEWALL REGISTER.
7. UNDERGROUND DUCT TO BE ROUTED AROUND (N) CONCRETE FOOTING (SSD).
8. CTE UNDERGROUND PVC SA DUCT-TOTAL ENCASE ANY PORTIONS OF SHT. MTL DUCT REQUIRED TO MAKE CONNECTION IN CONCRETE. SEAL AS REQUIRED FOR CONNECTIONS TO SHT. MTL. REGISTER BOOTS.
9. DUAL RADIUS REDUCING ELBOW WITH 1" AL AND 45° TAP-INS ON HEEL SIDE.
10. 36X36 ACOUSTICALLY LINED SHT. MTL. RETURN AIR PLENUM ABOVE WOOD SLAT CEILING-OMIT "BLANK-OFF" MATERIAL BETWEEN WOOD SLATS.
11. NOTCH SHT. MTL. PLENUM AT CSD AS REQ'D TO CLEAR STRUCTURE.
12. MOUNT WSR ON EXPOSED DUCT PARALLEL WITH CEILING SLOPE ABOVE.
13. MOUNT WSR ON EXPOSED DUCT IN HORIZONTAL POSITION.
14. 16ø X MIN. 3'-0" LONG FLEX DUCT CONNECTION TO TOP OF CRG-1 WITH 22X22X MIN. 6" HIGH PLENUM-PAINT INTERIOR OF PLENUM FLAT BLACK.
15. 18øX MIN. 3'-0" LONG FLEX DUCT CONNECTION TO TOP OF CRG-1 WITH 22X22X MIN. 6" HIGH PLENUM-PAINT INTERIOR OF PLENUM FLAT BLACK.
16. 28ø OD EXPOSED SPIRAL SEAM DUCT WITH 1-1/2" AL (SAD FOR EXACT LOCATION/ELEVATION AND DETAIL 8/M4.3 FOR ADD'L REQTS).
17. 22X22X 5-0" MIN. LONG EA DUCT UP THRU ROOF TO EXHAUST FAN ABOVE.
18. 16ø X 3'-0" MIN. LONG FLEX DUCT (TYP-2).
19. MANDATORY EXPOSED HANGER LOCATION (TYP – SEE DETAIL 8/M4.3)
20. BRACE EXPOSED DUCT TO (E) GLB (SEE DETAIL 8/M4.3)
21. EXPOSED DUCT WALL PENETRATION-FILL ANNULAR SPACE WITH GYP. BOARD TAPING COMPOUND.
22. ROOF ACCESS LADDER (SAD) – KEEP CLEAR.

TRUE NORTH
PROJ. NORTH
0 1 4 8 16 24 FEET

FIELD PAOLI

Architecture
1045 Sansome St.
Suite 206
San Francisco
California, 94111
Tel. 415. 788. 6606
Fax 415. 788. 6650

SARATOGA LIBRARY

SANTA CLARA COUNTY LIBRARY

13650 Saratoga Avenue
Saratoga, California 95070

MECHANICAL DESIGN STUDIO inc
3330 Clayton Rd. Suite B
Concord California 94519-2530
tel 925. 680 8858
fax 925. 680 4346
www.mds-ac.com
PROJECT # 3024.00

DATE	OCTOBER 26, 2001
REVISIONS	
	CONSTRUCTION DOCUMENTS
	BID SET

B C

FLOOR PLAN
HVAC
NORTH

SCALE	1/8" = 1'-0"
DRAWN BY	JLW/LK
CHECKED BY	DA
JOB NO.	0101

PHASE 2

SHEET NO. **M2.1A**

All drawings and written material appearing herein constitute the original and unpublished work of the architect and the same may not be duplicated, used, or disclosed without the written consent of the architect ©Field Paoli

11/02/01 1:56:57 PM P:\C_3000\3024-1.005\DRAWINGS\3024M21A.DWG

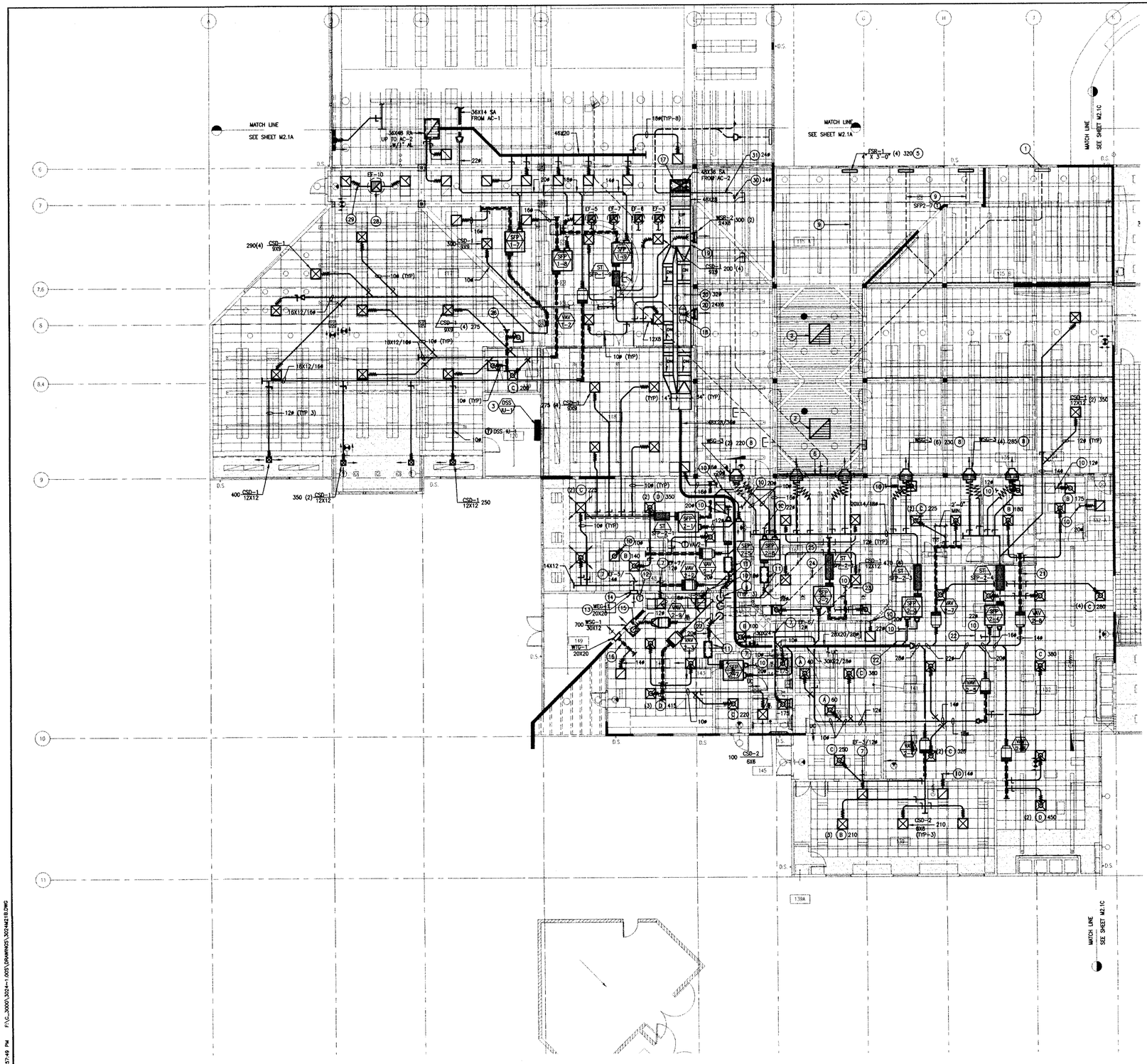

1 FLOOR PLAN - HVAC - CENTRAL
SCALE: 1/8" = 1'-0"

GENERAL NOTES

1. UON, MEDIUM PRESSURE SA BRANCH CONNECTIONS TO TERMINAL BOXES SHALL BE SAME SIZE AS BOX INLET CONNECTION. PROVIDE REDUCING TRANSITIONS AT BOX CONNECTION IF INDICATED BRANCH DUCT SIZE IS LARGER THAN BOX INLET.
2. DUCTWORK DRAWINGS ARE DIAGRAMMATIC AND DUCT OFFSETS ARE NOT SHOWN. DUCT SIZES ARE MINIMUMS REQUIRED FOR AIR FLOW. THE CONTRACTOR SHALL PROVIDE ALL NECESSARY DUCT OFFSETS AND CHANGE RATIO/SHAPE (BUT NOT EQUIVALENT AREAS) OF DUCTS AS REQUIRED IN ORDER TO CLEAR THE WORK OF ALL OTHER TRADES AND FIT IN THE CEILING SPACES PROVIDED. SOME DUCT SIZES LISTED ARE FOR BOTH RECTANGULAR AND ROUND; ANY DUCTS EXCEPT WHERE CALLED OUT TO BE "EXPOSED" CAN BE MADE EITHER RECTANGULAR OR ROUND BASED ON THE AVAILABLE SPACE.
3. PROVIDE REDUCING TRANSITION DUCTS AT CONNECTIONS TO DISCHARGES OF TERMINAL BOXES AND DUCT MOUNTED SOUND TRAPS. SEE TERMINAL BOX SCHEDULE FOR ACOUSTICALLY LINED DISCHARGE DUCT/PLENUM SIZES FOR BOXES WITHOUT SOUND TRAPS. (NOTE - MIN. DUCT/PLENUM LENGTHS IN SCHEDULES REFER TO DISTANCE TO FIRST BRANCH DUCT TAKE-OFF.) UON, DISCHARGE DUCTS/PLENUMS SHALL BE SAME SIZE AS ASSOCIATED SOUND TRAPS FOR BOXES WITH SOUND TRAPS.
4. INDIVIDUAL DUCT BRANCHES TO SUPPLY AIR OUTLETS IN ALL PUBLIC AREAS SHALL BE A MINIMUM OF 10'-0" IN LENGTH WITH THE ASSOCIATED BALANCING DAMPER AT THE CONNECTION TO THE MAIN DUCT. FLEX DUCT CONNECTIONS TO AIR OUTLETS SHALL BE MADE WITH A MINIMUM OF 3'-0" LONG AND A MAXIMUM OF 5'-0" LONG ACOUSTICAL DUCT.
5. UON, BRANCH DUCTS TO INDIVIDUAL SUPPLY AIR OUTLETS SHALL BE SAME SIZE AS INDICATED AIR OUTLET NECK SIZE.
6. UON, CEILING RETURN AND EXHAUST GRILLES INDICATED WITH CENTER ROUND DUCT CONNECTIONS SHALL HAVE SAME NECK SIZES AS INDICATED FOR THEIR ASSOCIATED BRANCH DUCTS.
7. PROVIDE NEOPRENE TYPE FLEX DUCT CONNECTIONS FOR DISCHARGE DUCT AND RETURN/INDUCTION AIR DUCT CONNECTIONS TO ALL FAN POWERED TERMINAL BOXES.
8. COORDINATE ALL EXPOSED CONTROLS SUCH AS THERMOSTATS AND EXHAUST FAN SWITCHES, ETC. WITH ARCHITECT BEFORE INSTALLING (NOTE - SEE HVAC PIPING PLANS FOR PNEUMATIC TERMINAL BOX T'STAT LOCATIONS).
9. PENETRATE ALL DRAFT STOPS AND FULL HEIGHT WALLS WHICH EXTEND TO UNDERSIDE OF ROOF AND ACT AS DRAFT STOPS WITH RIGID SHEET METAL DUCT - DO NOT USE FLEX (SEE ARCHITECTURAL FLOOR PLANS AND REFLECTED CEILING PLANS FOR LOCATIONS).

SHEET NOTES

1. REPLACE (E) FLOOR SA REGISTER WITH (N) AND DIRECT AIR FLOW TOWARDS WINDOW.
2. +/- 48"x48" ACOUSTICALLY LINED RELIEF AIR PLENUM/DUCT TO EXTEND FROM TOP OF WOOD SLAT CEILING TO REPLACED GRAVITY RELIEF HOOD ON ROOF ABOVE-OMIT "BLANK-OFF" MATERIAL BETWEEN WOOD SLATS.
3. HIGH WALL "MINI'D" SPLIT SYSTEM FAN COIL UNIT - COORDINATE EXACT MINTG LOCATION WITH TELCON EQUIPMENT. DO NOT LOCATE DIRECTLY ABOVE ANY ELECTRICAL COMPONENTS.
4. (N) SA DUCTS DN INSIDE CHASE TO (N) FRP UNDERGROUND DUCTS.
5. DIRECT AIR FLOW OF (N)/(E) FLOOR SA REGISTER TOWARDS WINDOW.
6. REUSE (E) 144"x36" RA GRILLE AND ASSOCIATED SOUND TRAP (TO BE USED FOR TRANSFER AIR FROM ADM. OFFICES)-VACUUM CLEAN INTERIOR OF (E) SOUND TRAP AND PROVIDE (N) FULL SIZE PLENUM CONNECTION. NOTE, REUSE OF (E) GRILLE IS CONTINGENT ON ARCHITECT'S AND/OR OWNER'S REPRESENTATIVES APPROVAL OF CONDITION OF GRILLE-CONTRACTOR SHALL PROVIDE (N) GRILLE TO MATCH (E) GRILLE (INCLUDING FINISH) IF GRILLE IS DAMAGED, MARKED OF FADED, ETC.
7. EA DUCT TO EXHAUST FAN ON "NORTH" FLAT ROOF (SEE ROOF PLAN FOR LOCATION).
8. STACKED WSG-3 (TYP OF 2 AT EACH LOCATION) - PROVIDE TRANSITION DUCT AT CONNECTION TO EACH WSG AS REQUIRED.
9. (E) 10# PHASE 1 UNDERGROUND DUCTWORK.
10. EXTEND RA DUCT TO REUSED (E) 144"x36" RA GRILLE WITH SOUND TRAP (TYP - SEE SHEET NOTE NO. 6). CONNECT TO SOUND TRAP WITH ADEQUATELY SUPPORTED MIN. 3'-0" LONG ACOUSTICAL FLEX DUCT.
11. ACOUSTICAL PLENUM WITH 2 LAYERS OF 2" THICK AL ON ALL INTERIOR FACES AND 3'-0" LONG ACOUSTICAL FLEX DUCT ON OUTLET (SEE SFP SCHEDULE FOR NET CLEAR SIZE OF PLENUM) - PROVIDE ADD'L SUPPORT FOR FLEX DUCT AS REQUIRD (DO NOT LET SAG OR INCLUDE A BEND MORE THAN 45°).
12. COORDINATE EXACT LOCATION OF T'STAT FOR EF-5 WITH ELEC. CONTRACTOR.
13. INSTALL WEG IN ELEC. ROOM 149 AS HIGH AS POSSIBLE.
14. MIN. 12" DEEP SHEET METAL PLENUM AT ASSOC. AIR OUTLET.
15. ACOUSTICALLY LINED PLENUM AT AIR OUTLET - AL TO CLEAR AIR OUTLET NECK SIZE.
16. MIN. 4'-0" LONG ACOUSTICALLY LINED PLENUM AT AIR OUTLET - AL TO CLEAR AIR OUTLET NECK SIZE. MIN. 4'-0" LONG ACOUSTICALLY LINED PLENUM AT AIR OUTLET - AL TO CLEAR AIR OUTLET NECK SIZE.
17. DUAL RADIUS REDUCING ELBOW WITH 1" AL.
18. NOTCH IN BOTTOM OF MAIN SA DUCT AT BRANCH DUCT TO WSR BELOW (SEE DETAIL 6/M4.3 - MINIMIZE NOTCH DEPTH).
19. OFFSET MAIN SA DUCTS INTO GLB SPACE AS REQUIRED TO ACCOMMODATE BRANCH DUCT TO WSR BELOW.
20. MAIN SA DUCT "SPLITS" TO CLEAR (E) ROOF GLBs TO REMAIN (SSD).
21. ADD'L 5'-0" OF ACOUSTICALLY LINED DUCT BEFORE BRANCHES TO PRIVATE OFFICES.
22. SKYLIGHT (SAD) - KEEP CLEAR.
23. CTE 28# PVS UNDERGROUND SA DUCT WITH (N) 20# FRP DUCT. PROVIDE TAPERED REDUCER AT CONNECTION TO (E) DUCT AND REMOVE ANY REMAINING PORTION OF (E) UNUSED DUCT OR FILL WITH CONCRETE.
24. CTE 24# PVS UNDERGROUND SA DUCT WITH (N) 22# FRP DUCT. PROVIDE TAPERED REDUCER AT CONNECTION TO (E) DUCT AND REMOVE ANY REMAINING PORTION OF (E) UNUSED DUCT OR FILL WITH CONCRETE.
25. CTE 30# PVS UNDERGROUND SA DUCT WITH (N) 20# FRP DUCT. PROVIDE TAPERED REDUCER AT CONNECTION TO (E) DUCT AND REMOVE ANY REMAINING PORTION OF (E) UNUSED DUCT OR FILL WITH CONCRETE.
26. 10" X 10" X MIN. 8'-0" LONG ACOUSTICALLY LINED TA DUCT.
27. MAIN TEMPERATURE CONTROL PANEL TCP-1 (RECESS IN WALL). VERIFY LOCATION WITH ARCHITECT.
28. 22X22X 5'-0" MIN. LONG EA DUCT UP THRU ROOF TO EXHAUST FAN ABOVE.
29. 16# X 3'-0" MIN. LONG FLEX DUCT (TYP-2).
30. CTE UNDERGROUND PVC SA DUCT-TOTAL ENCASE ANY PORTIONS OF SHT. MTL DUCT REQUIRED TO MAKE CONNECTION IN CONCRETE. SEAL AS REQUIRED FOR CONNECTIONS TO SHT. MTL. REGISTER BOOTS.
31. UNDERGROUND DUCT TO BE ROUTED AROUND (N) CONCRETE FOOTING (SSD).

FIELD PAOLI

Architecture
1045 Sansome St.
Suite 206
San Francisco
California, 94111
Tel. 415. 788. 6606
Fax 415. 788. 6650

SARATOGA LIBRARY

SANTA CLARA COUNTY LIBRARY

13650 Saratoga Avenue
Saratoga, California 95070

MECHANICAL DESIGN STUDIO inc
3330 Clayton Rd. Suite B
Concord California 94519-2838
tel 925. 680 6858
fax 925. 680 4346
www.mds-ef.com
PROJECT # 3024.00

DATE	OCTOBER 26, 2001
REVISIONS	

CONSTRUCTION DOCUMENTS
BID SET

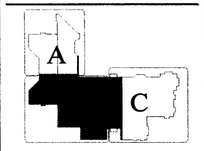

FLOOR PLAN
HVAC
CENTRAL

SCALE	1/8" = 1'-0"
DRAWN BY	JLW/LK
CHECKED BY	DA
JOB NO.	0101

PHASE 2

SHEET NO. **M2.1B**

All drawings and written material appearing herein constitute the original and unpublished work of the architect and the same may not be duplicated, used, or disclosed without the written consent of the architect ©Field Paoli

TRUE NORTH
PROJ. NORTH
0 1 4 8 16 24 FEET

11/02/01 1:57:49 PM F:\C_3000\3024-1.005\DRAWINGS\3024M2B.DWG

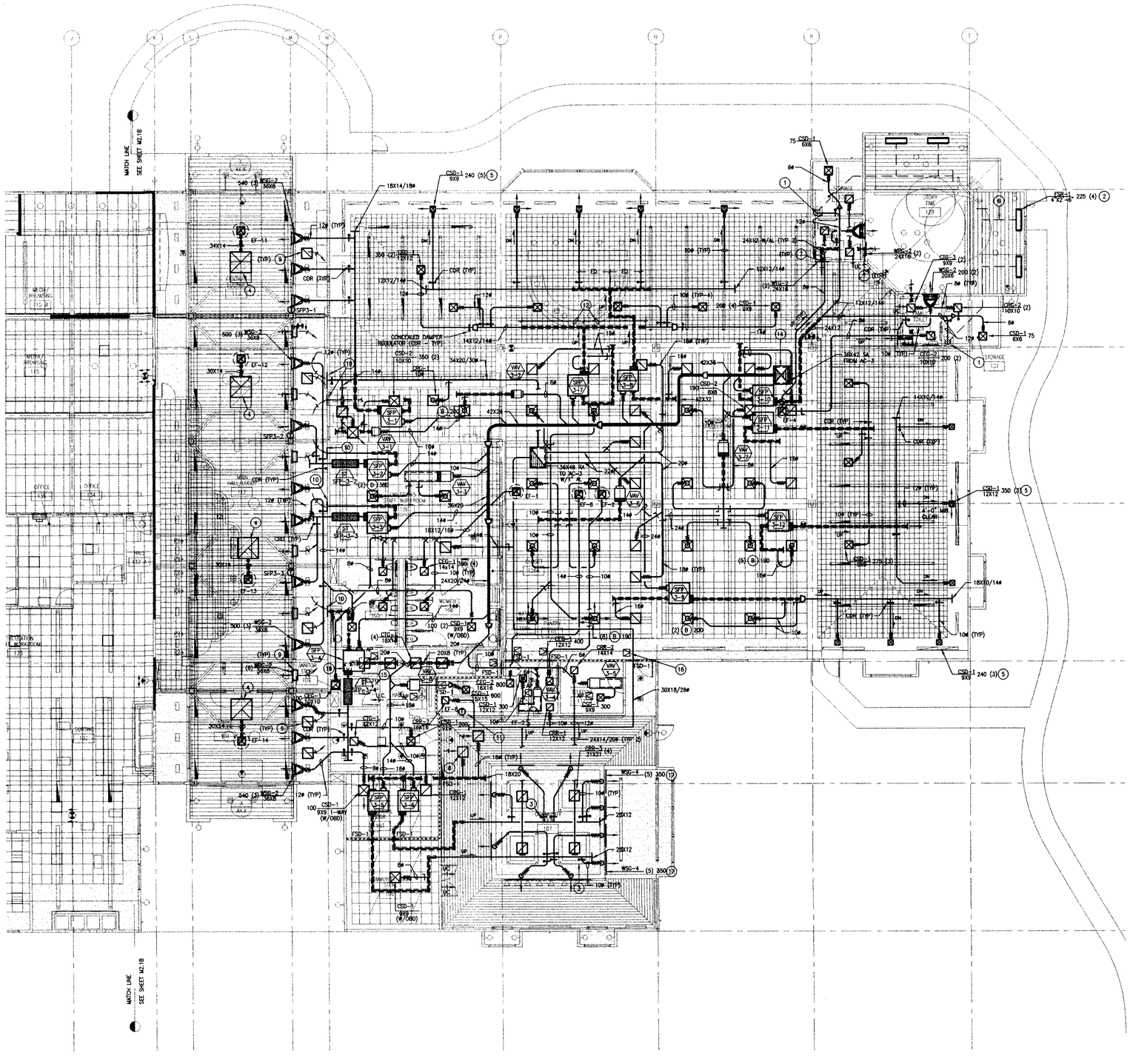

1 FLOOR PLAN - HVAC - SOUTH

SCALE: 1/8" = 1'-0"

GENERAL NOTES

1. UON, MEDIUM PRESSURE SA BRANCH CONNECTIONS TO TERMINAL BOXES SHALL BE SAME SIZE AS BOX INLET CONNECTION. PROVIDE REDUCING TRANSITIONS AT BOX CONNECTION IF INDICATED BRANCH DUCT SIZE IS LARGER THAN BOX INLET.
2. DUCTWORK DRAWINGS ARE DIAGRAMMATIC AND DUCT OFFSETS ARE NOT SHOWN. DUCT SIZES ARE MINIMUMS REQUIRED FOR AIR FLOW. THE CONTRACTOR SHALL PROVIDE ALL NECESSARY DUCT OFFSETS AND CHANGE RATIO/SHAPE (BUT NOT EQUIVALENT AREAS) OF DUCTS AS REQUIRED IN ORDER TO CLEAR THE WORK OF ALL OTHER TRADES AND FIT IN THE CEILING SPACES PROVIDED. SOME DUCT SIZES LISTED ARE FOR BOTH RECTANGULAR AND ROUND; ANY DUCTS EXCEPT WHERE CALLED OUT TO BE "EXPOSED" CAN BE MADE EITHER RECTANGULAR OR ROUND BASED ON THE AVAILABLE SPACE.
3. PROVIDE REDUCING TRANSITION DUCTS AT CONNECTIONS TO DISCHARGES OF TERMINAL BOXES AND DUCT MOUNTED SOUND TRAPS. SEE TERMINAL BOX SCHEDULE FOR ACOUSTICALLY LINED DISCHARGE DUCT/PLENUM SIZES FOR BOXES WITHOUT SOUND TRAPS. (NOTE – MIN. DUCT/PLENUM LENGTHS IN SCHEDULES REFER TO DISTANCE TO FIRST BRANCH DUCT TAKE-OFF.) UON, DISCHARGE DUCTS/PLENUMS SHALL BE SAME SIZE AS ASSOCIATED SOUND TRAPS FOR BOXES WITH SOUND TRAPS.
4. INDIVIDUAL DUCT BRANCHES TO SUPPLY AIR OUTLETS IN ALL PUBLIC AREAS SHALL BE A MINIMUM OF 10'-0" IN LENGTH WITH THE ASSOCIATED BALANCING DAMPER AT THE CONNECTION TO THE MAIN DUCT. FLEX DUCT CONNECTIONS TO AIR OUTLETS SHALL BE MADE WITH A MINIMUM OF 3'-0" LONG AND A MAXIMUM OF 5'-0" LONG ACOUSTICAL DUCT.
5. UON, BRANCH DUCTS TO INDIVIDUAL SUPPLY AIR OUTLETS SHALL BE SAME SIZE AS INDICATED AIR OUTLET NECK SIZE.
6. UON, CEILING RETURN AND EXHAUST GRILLES INDICATED WITH CENTER ROUND DUCT CONNECTIONS SHALL HAVE SAME NECK SIZES AS INDICATED FOR THEIR ASSOCIATED BRANCH DUCTS.
7. PROVIDE NEOPRENE TYPE FLEX DUCT CONNECTIONS FOR DISCHARGE DUCT AND RETURN/INDUCTION AIR DUCT CONNECTIONS TO ALL FAN POWERED TERMINAL BOXES.
8. COORDINATE ALL EXPOSED CONTROLS SUCH AS THERMOSTATS AND EXHAUST FAN SWITCHES, ETC. WITH ARCHITECT BEFORE INSTALLING (NOTE – SEE HVAC PIPING PLANS FOR PNEUMATIC TERMINAL BOX T'STAT LOCATIONS).
9. PENETRATE ALL DRAFT STOPS AND FULL HEIGHT WALLS WHICH ACT AS DRAFT STOPS WITH RIGID SHEET METAL DUCT – DO NOT USE FLEX (SEE ARCHITECTURAL FLOOR PLANS AND REFLECTED CEILING PLANS FOR LOCATIONS).
10. PROVIDE ADDITIONAL CEILING ACCESS PANELS FOR ACCESS TO FIRE-SMOKE DAMPERS LOCATED ABOVE HARD CEILINGS – COORDINATE SIZES AND LOCATIONS WITH ARCHITECT.
11. COORDINATE LOCATIONS OF REMOTE INDICATION PANELS FOR ALL FIRE-SMOKE DAMPERS WITH ARCHITECT IN FIELD.

SHEET NOTES

1. CTE 12# PHASE 1 UNDERGROUND DUCTWORK W/(IN) 12#.
2. DIRECT AIR FLOW OF (N) FLOOR SA REGISTER TOWARDS WINDOW.
3. OPERATOR FOR WSC-4 CDRs TO BE LOCATED IN ASSOC. WSC-4 PLENUM.
4. 54"X48"X MIN. 24" HIGH SHT. MTL. EXHAUST PLENUM WITH 2" AL ABOVE WOOD SLAT CEILING-OMIT "BLANK-OFF" MATERIAL BETWEEN WOOD SLATE. LOCATE PLENUM BETWEEN GLBs AND STEEL BEAMS SUPPORTING HIGH-ROOF ABOVE.
5. NOTCH SHT. MTL. PLENUM AT CSD AS REQ'D TO CLEAR STRUCTURE.
6. (E) 8# PHASE I UNDERGROUND BRANCH DUCT (TYP. 4).
7. STOP AL 4" SHORT OF ASSOCIATED GRILLE.
8. 36X36X MIN. 18" HIGH SHT. MTL. RETURN AIR PLENUM WITH 2" AL ABOVE WOOD SLAT CEILING (TYP-2)-OMIT "BLANK-OFF" MATERIAL BETWEEN WOOD SLATE.
9. UNDUCTED RA GRILLE IN GYP. BOARD LINED RETURN AIR SOFFIT (SAD) – PAINT ALL SURFACES, DUCTWORK, ETC. INSIDE SOFFIT FLAT BLACK AT GRILLE LOCATION.
10. CONNECT RA DUCT TO GYP. BOARD LINED RETURN AIR SOFFIT (SAD).
11. COORDINATE EXACT LOCATION OF T'STAT FOR EF-8 WITH ELECTRICAL CONTRACTOR.
12. MIN. 12'-0" LONG ACOUSTICALLY LINED DUCT BRANCHES FOR SFP 3-7.
13. NOT USED.
14. DUAL RADIUS ELBOW WITH 1" AL.
15. ROOF ACCESS LADDER (SAD)-KEEP CLEAR.
16. CEILING ACCESS PANEL FOR FSD (TYP) – VERIFY LOCATION WITH ARCHITECT IN FIELD.
17. LINEAR WALL SUPPLY GRILLE IN CEILING COFFER (SAD).
18. LOCATE CEILING ACCESS PANEL DIRECTLY UNDER SFP 3-4 FAN – PROVIDE ADDITIONAL DUCT ACCESS DOOR IN BOTTOM PANEL OF SFP 3-4 AS REQUIRED TO ACCESS SFP FAN MOTOR FROM DIRECTLY BELOW.

TRUE NORTH
PROJ. NORTH
0 1 4 8 16 24 FEET

FIELD PAOLI

Architecture
1045 Sansome St.
Suite 206
San Francisco
California, 94111
Tel. 415. 788. 6606
Fax 415. 788. 6650

SARATOGA LIBRARY

SANTA CLARA COUNTY LIBRARY

13650 Saratoga Avenue
Saratoga, California 95070

MECHANICAL DESIGN STUDIO Inc
3330 Clayton Rd. Suite B
Concord California 94519-2638
tel 925. 680 8858
fax 925. 680 4348
www.mds-ai.com
PROJECT # 3024.00

REGISTERED PROFESSIONAL ENGINEER — CLIFFORD ANDERSEN — No. M 26541 — Expires 6/30/02 — MECHANICAL — STATE OF CALIFORNIA

REGISTERED PROFESSIONAL ENGINEER — DAVID ARMSTRONG — NO. C 13803 — REN. — CIVIL — STATE OF CALIFORNIA

DATE	OCTOBER 26, 2001
REVISIONS	
	CONSTRUCTION DOCUMENTS
	BID SET

A
B

FLOOR PLAN
HVAC
SOUTH

SCALE	1/8" = 1'-0"
DRAWN BY	JLW/LK
CHECKED BY	DA
JOB NO.	0101

PHASE 2

SHEET NO. **M2.1C**

All drawings and written material appearing herein constitute the original and unpublished work of the architect and the same may not be duplicated, used, or disclosed without the written consent of the architect ©Field Paoli

11/02/01 1:58:45 PM F:\C_3000\3024-1.005\DRAWINGS\3024M21C.DWG

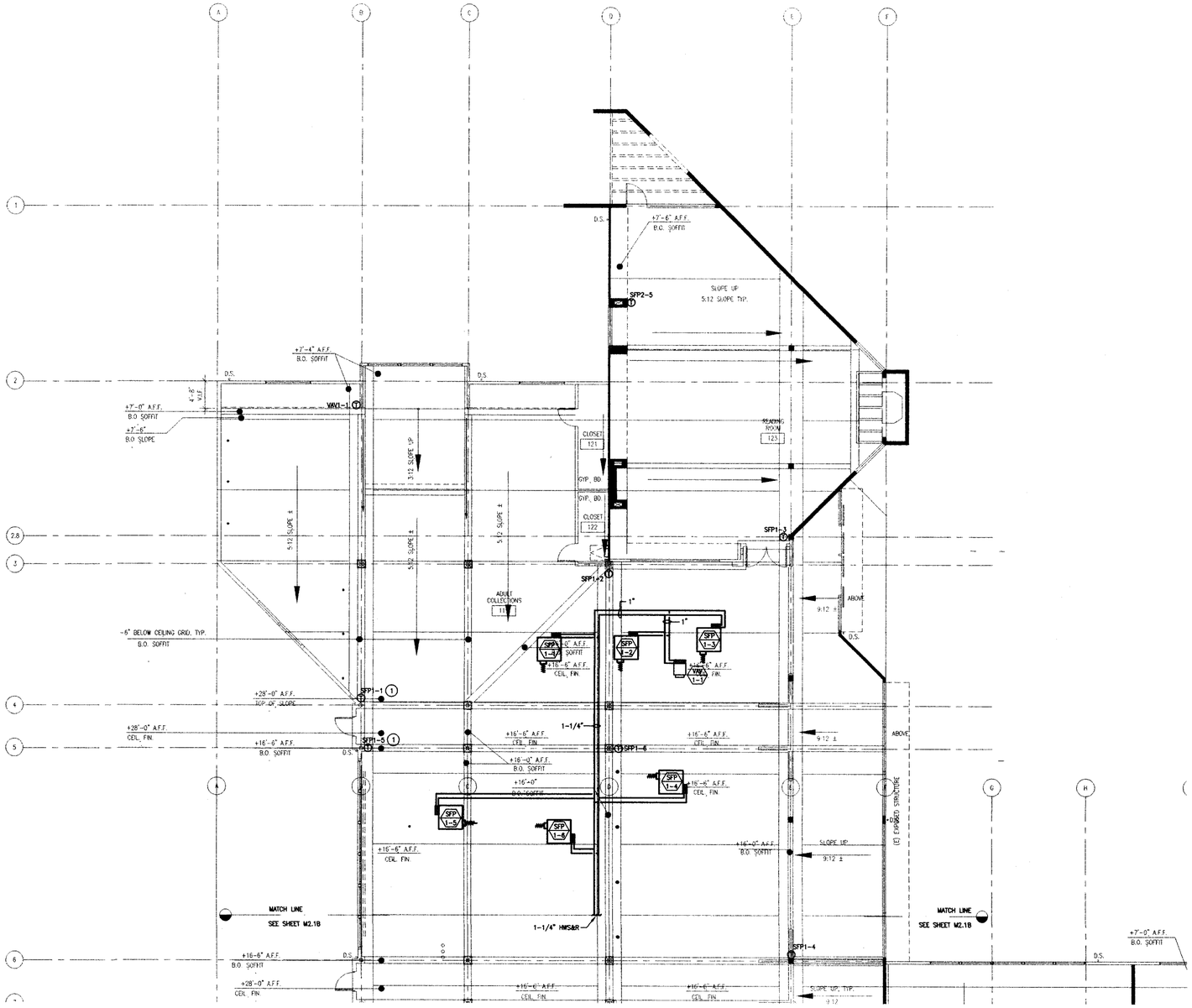

GENERAL NOTES

1. SEE HVAC (DUCTWORK) PLANS FOR GENERAL NOTES.
2. UON, HWS & R PIPE BRANCHES TO INDIVIDUAL TERMINAL BOXES SHALL BE 3/4".

SHEET NOTES

(1) T'STAT ON EXTERIOR WALL – INSTALL CENTERED BETWEEN STUDS. VERIFY STUD CAVITY IS FILLED WITH INSULATION – PROVIDE ADDITIONAL INSULATION AS REQUIRED.

(1) FLOOR PLAN - HVAC PIPING - NORTH
SCALE: 1/8" = 1'-0"

0 1 4 8 16 24 FEET

TRUE NORTH
PROJ. NORTH

FIELD PAOLI

Architecture
1045 Sansome St.
Suite 206
San Francisco
California, 94111
Tel. 415. 788. 6606
Fax 415. 788. 6650

SARATOGA LIBRARY

SANTA CLARA COUNTY LIBRARY

13650 Saratoga Avenue
Saratoga, California 95070

MECHANICAL DESIGN STUDIO inc
3330 Clayton Rd. Suite B
Concord California 94519-2838
tel 925. 680 8868
fax 925. 680 4346
www.mds-ac.com
PROJECT # 3024.00

DATE	OCTOBER 26, 2001
REVISIONS	
	CONSTRUCTION DOCUMENTS
	BID SET

B C

FLOOR PLAN
HVAC PIPING
NORTH

SCALE	1/8" = 1'-0"
DRAWN BY	JLW/LK
CHECKED BY	DA
JOB NO.	0101

PHASE 2

SHEET NO. **M2.2A**

All drawings and written material appearing herein constitute the original and unpublished work of the architect and the same may not be duplicated, used, or disclosed without the written consent of the architect ©Field Paoli

11/02/01 1:59:41 PM F:\C_3000\3021-1.005\DRAWINGS\3024M2A.DWG

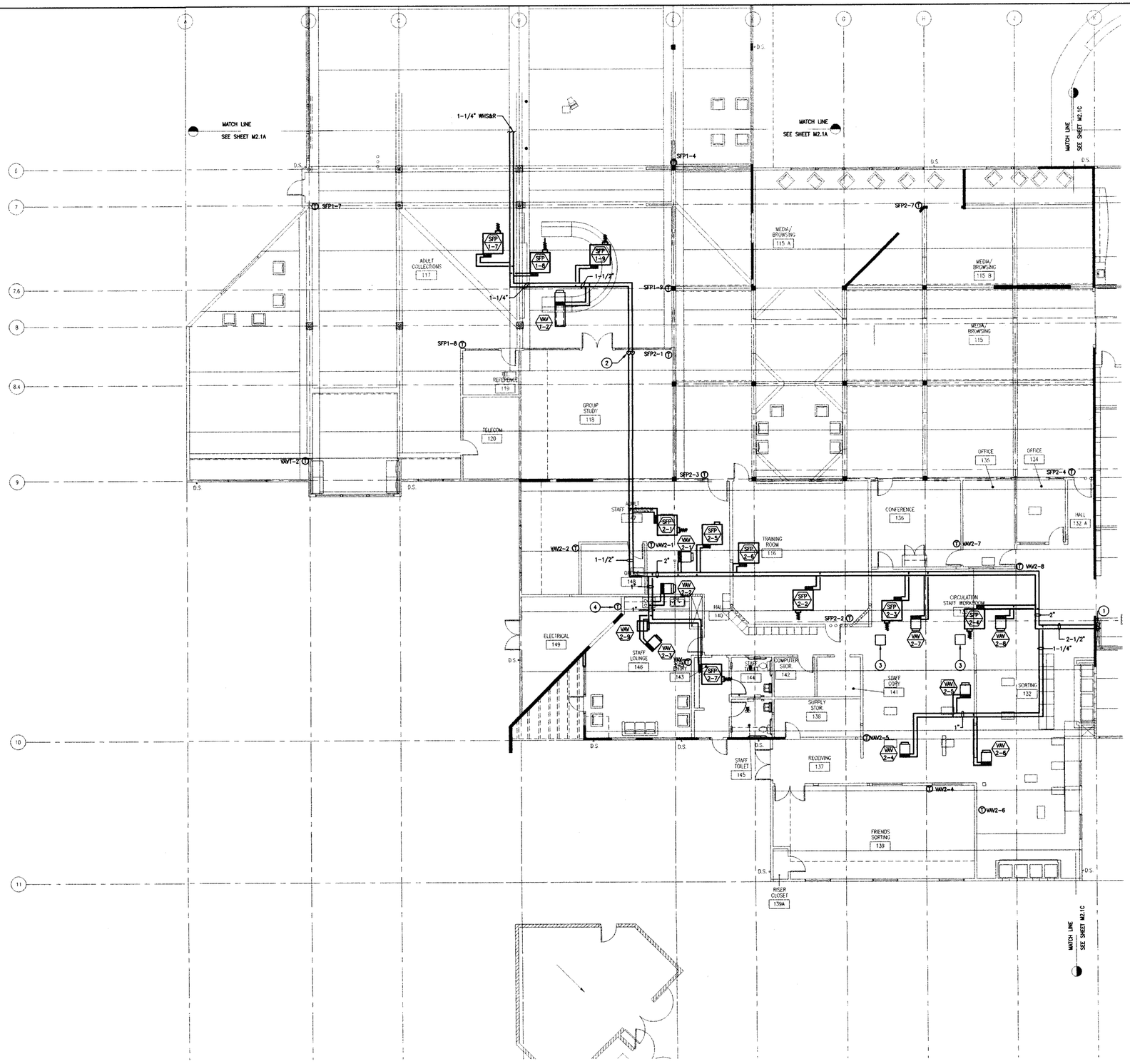

1 FLOOR PLAN - HVAC PIPING - CENTRAL
SCALE: 1/8" = 1'-0"

GENERAL NOTES

1. SEE HVAC (DUCTWORK) PLANS FOR GENERAL NOTES.
2. UON, HWS & R PIPE BRANCHES TO INDIVIDUAL TERMINAL BOXES SHALL BE 3/4".

SHEET NOTES

1. CTE PHASE I 2-1/2" HWS&R UNDERGROUND PIPING STUB-UPS. (1/2" CONTROL AIR MAIN AND 1" CONTROLS CONDUITS NOT SHOWN).
2. OFFSET PIPING TO CLEAR (E) GLB (SSD).
3. SKYLIGHT (SSD)-KEEP CLEAR.
4. COORDINATE EXACT LOCATION OF T'STAT FOR VAV 2-9 WITH ELEC. CONTRACTOR.

FIELD PAOLI

Architecture
1045 Sansome St.
Suite 206
San Francisco
California, 94111
Tel. 415. 788. 6606
Fax 415. 788. 6650

SARATOGA LIBRARY

SANTA CLARA COUNTY LIBRARY

13650 Saratoga Avenue
Saratoga, California 95070

MECHANICAL DESIGN STUDIO inc
3330 Clayton Rd. Suite B
Concord California 94519-2638
tel 925. 680 6858
fax. 925. 680 4346
www.mds-sf.com
PROJECT # 3024.00

DATE	OCTOBER 26, 2001
REVISIONS	

CONSTRUCTION DOCUMENTS
BID SET

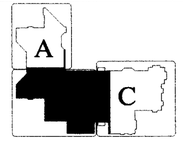

FLOOR PLAN
HVAC PIPING
CENTRAL

SCALE	1/8" = 1'-0"
DRAWN BY	JLW/LK
CHECKED BY	DA
JOB NO.	0101

PHASE 2

SHEET NO. **M2.2B**

All drawings and written material appearing herein constitute the original and unpublished work of the architect and the same may not be duplicated, used, or disclosed without the written consent of the architect ©Field Paoli

TRUE NORTH
PROJ. NORTH
0 1 4 8 16 24 FEET

11/02/01 2:00:13 PM F:\C...3000\3024-1.005\DRAWINGS\3024M2B2B.DWG

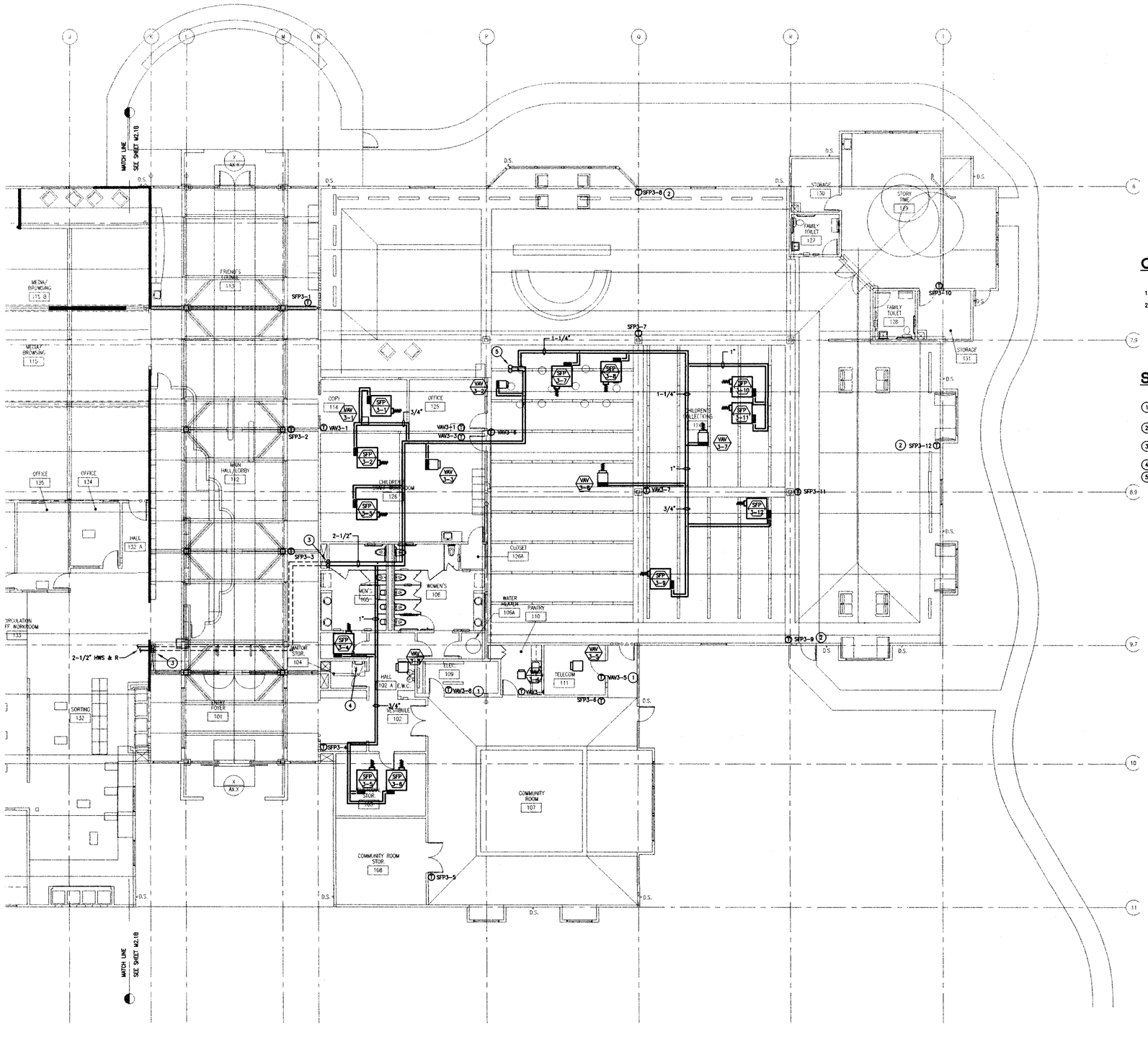

GENERAL NOTES

1. SEE HVAC (DUCTWORK) PLANS FOR GENERAL NOTES.
2. UON, HWS & R PIPE BRANCHES TO INDIVIDUAL TERMINAL BOXES SHALL BE 3/4".

SHEET NOTES

1. COORDINATE EXACT LOCATIONS OF T'STATS FOR VAV 3-5 AND VAV 3-8 WITH TELECOM AND ELECTRICAL CONTRACTOR.
2. T'STAT ON EXTERIOR WALL – INSTALL CENTERED BETWEEN STUDS. VERIFY STUD CAVITY IS FILLED WITH INSULATION – PROVIDE ADDITIONAL INSULATION AS REQUIRED.
3. CTE PHASE I 2-1/2" HWS & R UNDERGROUND PIPING STUB-UPS (1/2" CONTROL AIR MAIN AND 1" CONTROLS CONDUIT NOT SHOWN).
4. ROOF ACCESS LADDER (SAD) – KEEP CLEAR.
5. 2-1/2" HWS & R UP TO HHWS-1 ON ROOF ABOVE.

1 FLOOR PLAN - HVAC PIPING - SOUTH
SCALE: 1/8" = 1'-0"

TRUE NORTH
PROJ. NORTH
0 1 4 8 16 24 FEET

FIELD PAOLI

Architecture
1045 Sansome St.
Suite 206
San Francisco
California, 94111
Tel. 415. 788. 6606
Fax 415. 788. 6650

SARATOGA LIBRARY

SANTA CLARA COUNTY LIBRARY

13650 Saratoga Avenue
Saratoga, California 95070

MECHANICAL DESIGN STUDIO inc
3330 Clayton Rd. Suite B
Concord California 94518-2838
tel 925. 680. 8898
fax 925. 680. 4348
www.mds-sf.com
PROJECT # 3024.00

REGISTERED PROFESSIONAL ENGINEER DANIEL ANDERSON No. M 28561 Expires 6/30/02 MECHANICAL STATE OF CALIFORNIA

NO. C 13809 REGISTERED PROFESSIONAL ENGINEER CIVIL STATE OF CALIFORNIA

DATE	OCTOBER 26, 2001
REVISIONS	
	CONSTRUCTION DOCUMENTS
	BID SET

A
B

FLOOR PLAN
HVAC PIPING
SOUTH

SCALE	1/8" = 1'-0"
DRAWN BY	JLW/JK
CHECKED BY	DA
JOB NO.	0101

PHASE 2

SHEET NO. **M2.2C**

All drawings and written material appearing herein constitute the original and unpublished work of the architect and the same may not be duplicated, used, or disclosed without the written consent of the architect ©Field Paoli

11/02/01 2:00:45 PM F:\JC_3000\3024-1.005\DRAWINGS\3024M2B2C.DWG

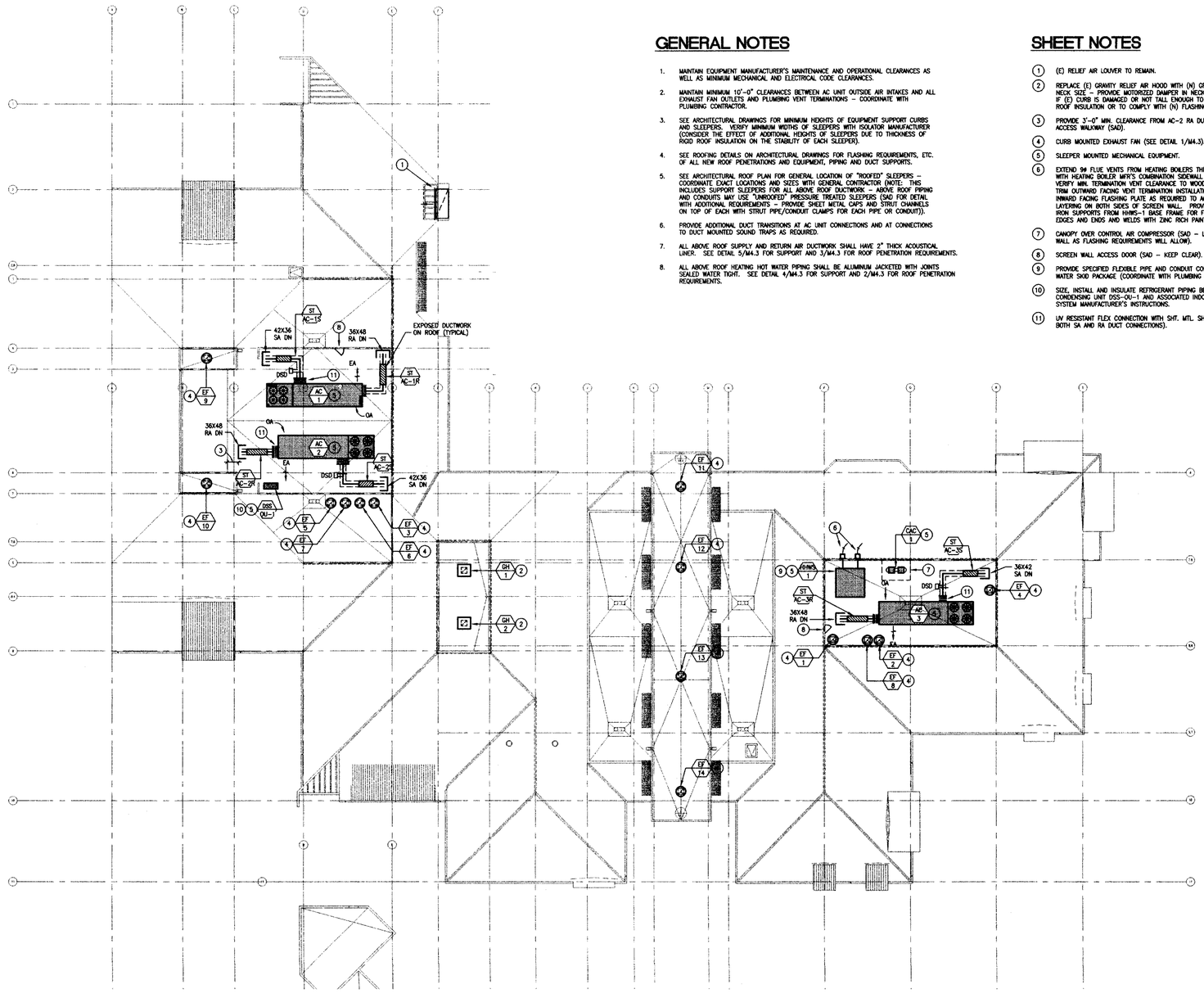

GENERAL NOTES

1. MAINTAIN EQUIPMENT MANUFACTURER'S MAINTENANCE AND OPERATIONAL CLEARANCES AS WELL AS MINIMUM MECHANICAL AND ELECTRICAL CODE CLEARANCES.
2. MAINTAIN MINIMUM 10'-0" CLEARANCES BETWEEN AC UNIT OUTSIDE AIR INTAKES AND ALL EXHAUST FAN OUTLETS AND PLUMBING VENT TERMINATIONS – COORDINATE WITH PLUMBING CONTRACTOR.
3. SEE ARCHITECTURAL DRAWINGS FOR MINIMUM HEIGHTS OF EQUIPMENT SUPPORT CURBS AND SLEEPERS. VERIFY MINIMUM WIDTHS OF SLEEPERS WITH ISOLATOR MANUFACTURER (CONSIDER THE EFFECT OF ADDITIONAL HEIGHTS OF SLEEPERS DUE TO THICKNESS OF RIGID ROOF INSULATION ON THE STABILITY OF EACH SLEEPER).
4. SEE ROOFING DETAILS ON ARCHITECTURAL DRAWINGS FOR FLASHING REQUIREMENTS, ETC. OF ALL NEW ROOF PENETRATIONS AND EQUIPMENT, PIPING AND DUCT SUPPORTS.
5. SEE ARCHITECTURAL ROOF PLAN FOR GENERAL LOCATION OF "ROOFED" SLEEPERS – COORDINATE EXACT LOCATIONS AND SIZES WITH GENERAL CONTRACTOR (NOTE: THIS INCLUDES SUPPORT SLEEPERS FOR ALL ABOVE ROOF DUCTWORK – ABOVE ROOF PIPING AND CONDUITS MAY USE "UNROOFED" PRESSURE TREATED SLEEPERS (SAD FOR DETAIL WITH ADDITIONAL REQUIREMENTS – PROVIDE SHEET METAL CAPS AND STRUT CHANNELS ON TOP OF EACH WITH STRUT PIPE/CONDUIT CLAMPS FOR EACH PIPE OR CONDUIT)).
6. PROVIDE ADDITIONAL DUCT TRANSITIONS AT AC UNIT CONNECTIONS AND AT CONNECTIONS TO DUCT MOUNTED SOUND TRAPS AS REQUIRED.
7. ALL ABOVE ROOF SUPPLY AND RETURN AIR DUCTWORK SHALL HAVE 2" THICK ACOUSTICAL LINER. SEE DETAIL 5/M4.3 FOR SUPPORT AND 3/M4.3 FOR ROOF PENETRATION REQUIREMENTS.
8. ALL ABOVE ROOF HEATING HOT WATER PIPING SHALL BE ALUMINUM JACKETED WITH JOINTS SEALED WATER TIGHT. SEE DETAIL 4/M4.3 FOR SUPPORT AND 2/M4.3 FOR ROOF PENETRATION REQUIREMENTS.

SHEET NOTES

1. (E) RELIEF AIR LOUVER TO REMAIN.
2. REPLACE (E) GRAVITY RELIEF AIR HOOD WITH (N) GREENHECK FABRA HOOD WITH SAME NECK SIZE – PROVIDE MOTORIZED DAMPER IN NECK OF HOOD AND (N) ROOF CURB IF (E) CURB IS DAMAGED OR NOT TALL ENOUGH TO ACCOMMODATE ADDITIONAL RIGID ROOF INSULATION OR TO COMPLY WITH (N) FLASHING REQUIREMENTS.
3. PROVIDE 3'-0" MIN. CLEARANCE FROM AC-2 RA DUCT DROP TO ADJACENT WALL FOR ACCESS WALKWAY (SAD).
4. CURB MOUNTED EXHAUST FAN (SEE DETAIL 1/M4.3).
5. SLEEPER MOUNTED MECHANICAL EQUIPMENT.
6. EXTEND 9# FLUE VENTS FROM HEATING BOILERS THRU SCREEN WALL AND TERMINATE WITH HEATING BOILER MFR'S COMBINATION SIDEWALL VENT TERMINATION AND WALL THIMBLE – VERIFY MIN. TERMINATION VENT CLEARANCE TO WOOD SURFACES WITH BOILER MFR. – TRIM OUTWARD FACING VENT TERMINATION INSTALLATION PLATE AND PROVIDE ADDITIONAL INWARD FACING FLASHING PLATE AS REQUIRED TO ACCOMMODATE PROPER BUILDING PAPER LAYERING ON BOTH SIDES OF SCREEN WALL. PROVIDE ADDITIONAL GALVANIZED ANGLE IRON SUPPORTS FROM HHMS-1 BASE FRAME FOR FLUES – PAINT ALL RAW AND CUT EDGES AND ENDS AND WELDS WITH ZINC RICH PAINT.
7. CANOPY OVER CONTROL AIR COMPRESSOR (SAD – LOCATE CAC-1 AS CLOSE TO SCREEN WALL AS FLASHING REQUIREMENTS WILL ALLOW).
8. SCREEN WALL ACCESS DOOR (SAD – KEEP CLEAR).
9. PROVIDE SPECIFIED FLEXIBLE PIPE AND CONDUIT CONNECTIONS TO HEATING HOT WATER SKID PACKAGE (COORDINATE WITH PLUMBING AND ELECTRICAL CONTRACTORS).
10. SIZE, INSTALL AND INSULATE REFRIGERANT PIPING BETWEEN DUCTLESS SPLIT SYSTEM OUTDOOR CONDENSING UNIT DSS-OU-1 AND ASSOCIATED INDOOR FAN COIL UNIT DSS-IU-1 PER SPLIT SYSTEM MANUFACTURER'S INSTRUCTIONS.
11. UV RESISTANT FLEX CONNECTION WITH SHT. MTL. SHIELDS ON TOP AND SIDES (TYP AT BOTH SA AND RA DUCT CONNECTIONS).

1 ROOF PLAN - HVAC
SCALE: 1/16" = 1'-0"

TRUE NORTH
PROJ. NORTH

FIELD PAOLI

Architecture
1045 Sansome St.
Suite 206
San Francisco
California, 94111
Tel. 415. 788. 6606
Fax 415. 788. 6650

SARATOGA LIBRARY

SANTA CLARA COUNTY LIBRARY

13650 Saratoga Avenue
Saratoga, California 95070

MECHANICAL DESIGN STUDIO inc
3330 Clayton Rd. Suite B
Concord California 94518-2838
tel 925. 680 8858
fax 925. 680 4346
www.mds-ef.com
PROJECT # 3024.00

DATE	OCTOBER 26, 2001
REVISIONS	

CONSTRUCTION DOCUMENTS
BID SET

ROOF PLAN - HVAC

SCALE	1/16" = 1'-0"
DRAWN BY	JLW/LK
CHECKED BY	DA
JOB NO.	0101

PHASE 2

SHEET NO. **M3.1**

All drawings and written material appearing herein constitute the original and unpublished work of the architect and the same may not be duplicated, used, or disclosed without the written consent of the architect ©Field Paoli

11/02/01 2:01:14 PM F:\C_3000\3024-1.005\DRAWINGS\3024M31.DWG

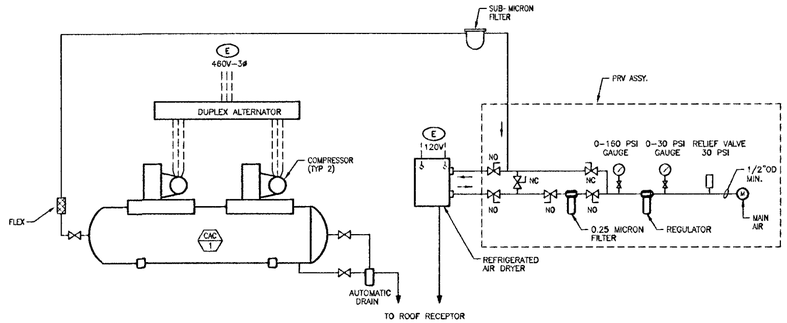

NOTE: 1. SEE MISCELLANEOUS EQUIPMENT SCHEDULE ON M0.1 FOR VIBRATION ISOLATOR REQUIREMENTS.
2. PROVIDE ADDITIONAL SOLENOID VALVES AT EACH AC UNIT FOR WARM-UP SIGNAL TO TERMINAL BOXES AND AT COMMUNITY ROOM SFP 3-5 AND 3-8 FOR ON/OFF CONTROL.

3 CAC-1 PIPING DIAGRAM
NO SCALE

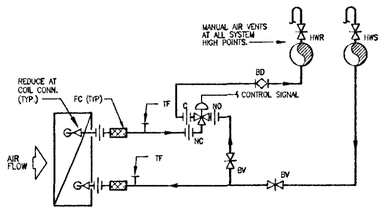

NOTE: OMIT FLEX CONNECTIONS AT ALL VAV TERMINAL BOXES.

5 COIL PIPING 3-WAY ACV
NOT TO SCALE

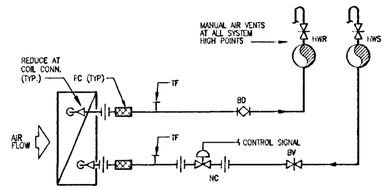

NOTE: OMIT FLEX CONNECTIONS AT ALL VAV TERMINAL BOXES.

4 COIL PIPING 2-WAY ACV
NOT TO SCALE

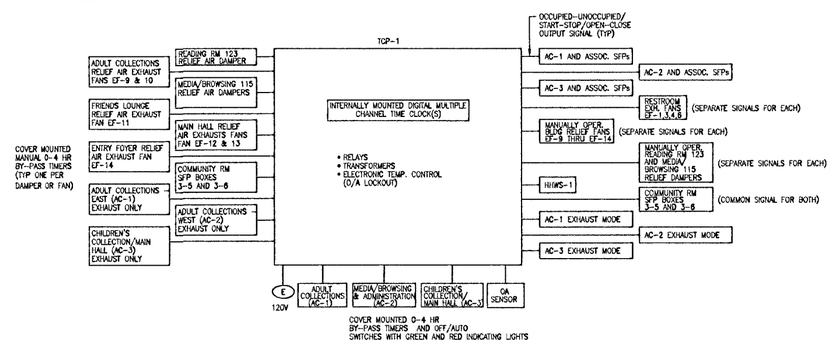

NOTE: PROVIDE APPROPRIATE LABELS FOR EACH OPERATORS' BY-PASS TIMER, ETC. (SUBMIT PANEL COVER DESIGN WITH CONTROLS SUBMITTAL).

6 TCP-1 DIAGRAM
NO SCALE

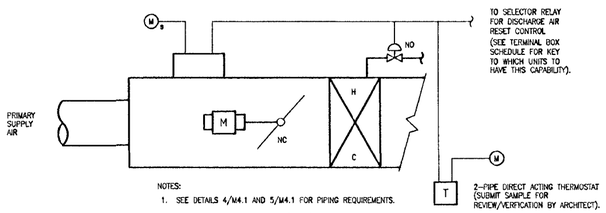

NOTES:
1. SEE DETAILS 4/M4.1 AND 5/M4.1 FOR PIPING REQUIREMENTS.
2. SERIES FAN POWERED BOXES TO HAVE SIMILAR PNEUMATIC CONTROL CONNECTIONS.
3. DETAIL SIMILAR FOR TERMINAL BOX WITHOUT REHEAT EXCEPT OMIT REHEAT COIL AND CONTROL VALVE.
4. THERMOSTAT ACTION AND NORMAL DAMPER AND CONTROL VALVE POSITIONS SHALL BE VERIFIED BY CONTROLS CONTRACTOR.
5. SEE SEQUENCE OF OPERATION IN SPECIFICATIONS FOR FULL REQUIREMENTS - PROVIDE ADDITIONAL RELAYS, SOLENOID VALVES, ETC. AS REQUIRED.

7 TERMINAL BOX WITH REHEAT
NOT TO SCALE

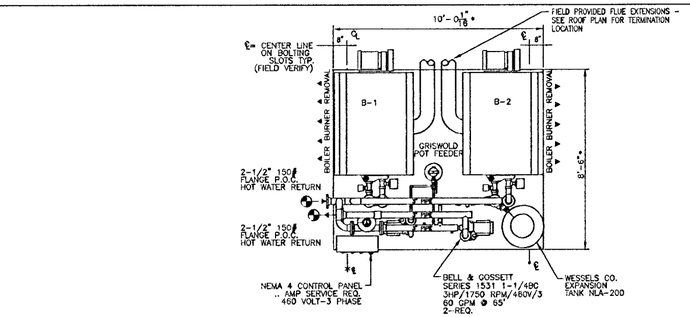

PLAN VIEW

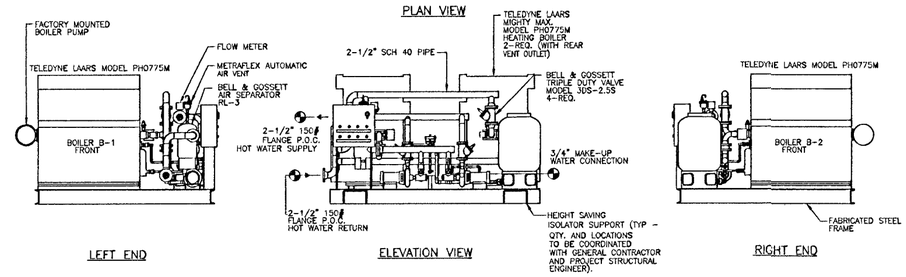

LEFT END — ELEVATION VIEW — RIGHT END

*NOTE: UNIT OVERALL DIMENSIONS SHALL BE VERIFIED WITH SKID MANUFACTURER.

SKID CONSTRUCTION NOTES:
(1) ALL PIPING LARGER THAN 2" TO BE SCH 40 BLACK STEEL WELDED PIPE.
(2) ALL PIPING 2" AND SMALLER TO BE TYPE L COPPER
(3) STEEL FRAME AND PIPING TO RECEIVE TWO COATS OF GRAY MACHINE ENAMEL.
(4) COMPLETE SYSTEM TO BE HYDRO TESTED TO 125 PSI PRIOR TO SHIPPING.
(5) APPROXIMATE SHIPPING WEIGHT TO BE 7000 LBS.
(6) MAXIMUM OPERATING WEIGHT TO BE 7500 LBS
(7) ALL WELDED WATER PIPING TO BE WELDED IN ACCORDANCE TO ASME B31.9
(8) COMPLETE PACKAGE SYSTEM TO BE UL LISTED.

1 HEATING HOT WATER SKID CONSTRUCTION DETAIL
NOT TO SCALE

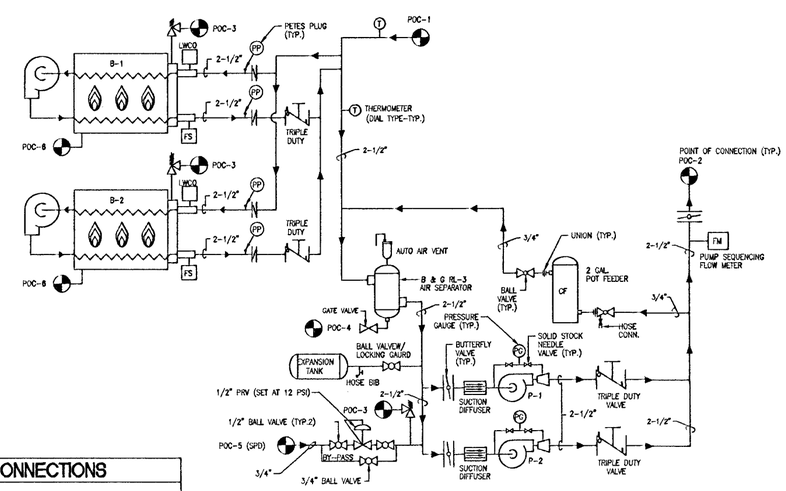

2 HEATING HOT WATER SKID PIPING DIAGRAM
NOT TO SCALE

HHWS-1 POINTS OF CONNECTIONS

TAG #	SIZE	CONNECTION TYPE	SERVICE
POC-1	2-1/2"	FEMALE PIPE THREAD	SYSTEM RETURN (1)
POC-2	2-1/2"	150# FLANGE	SYSTEM SUPPLY (1)
POC-3	3/4"	FEMALE PIPE THREAD	BOILER RELIEF, PIPE TO ROOF RECEPTOR (SPD)
POC-4	1"	FEMALE PIPE THREAD	ROUARTROL DRAIN, PIPE TO ROOF RECEPTOR (SPD)
POC-5	3/4"	FEMALE PIPE THREAD	COLD WATER MAKE-UP (BY PLUMBING CONTRACTOR-SPD) (1)
POC-6	1-1/4"	FEMALE PIPE THREAD	GAS SUPPLY TO BOILER (BY PLUMBING CONTRACTOR-SPD) (1)

NOTES: (1) PROVIDE FLEXIBLE PIPE CONNECTIONS.

FIELD PAOLI

Architecture
1045 Sansome St.
Suite 206
San Francisco
California, 94111
Tel. 415. 788. 6606
Fax 415. 788. 6650

SARATOGA LIBRARY
SANTA CLARA COUNTY LIBRARY

13650 Saratoga Avenue
Saratoga, California 95070

MECHANICAL DESIGN STUDIO inc
3330 Clayton Rd. Suite B
Concord California 94519-2838
tel 925. 680 5858
fax 925. 680 4348
www.mds-ei.com
PROJECT # 3024.00

REGISTERED PROFESSIONAL ENGINEER — MICHAEL LINDSTROM — No. M 20545 — Expires 12/31/02 — MECHANICAL — STATE OF CALIFORNIA

REGISTERED ARCHITECT — NO. C 13808 — REN. — STATE OF CALIFORNIA

DATE	OCTOBER 26, 2001
REVISIONS	
	CONSTRUCTION DOCUMENTS
	BID SET

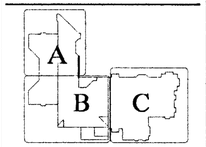

DETAILS AND DIAGRAMS

SCALE	AS NOTED
DRAWN BY	JLW/LK
CHECKED BY	DA
JOB NO.	0101

PHASE 2

SHEET NO. M4.1

All drawings and written material appearing herein constitute the original and unpublished work of the architect and the same may not be duplicated, used, or disclosed without the written consent of the architect ©Field Paoli

11/02/01 2:01:52 PM F:\C_3000\3024-1.005\DRAWINGS\3024M41.DWG

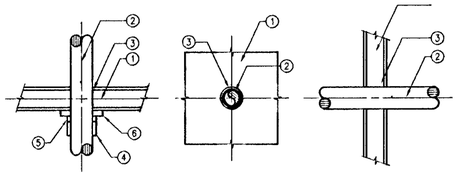

PACK SPACE BETWEEN PIPING AND PENETRATION OPENING WITH MATERIAL APPROVED BY UNDERWRITERS LABORATORIES FOR THROUGH PENETRATION FIRE STOP SYSTEMS. MATERIALS, METHODS, AND INSTALLATION SHALL BE IN ACCORDANCE WITH UL APPROVED LISTING AND SHALL BE DESIGNED TO ACT AS A FIRESTOP AS WELL AS A COLD SMOKE, NOXIOUS GAS AND WATER SEALANT. SUBMIT LISTING NUMBERS AND DETAILS FROM UL FIRE RESISTANT DIRECTORY FOR ALL SUCH SYSTEMS TO BE USED. INSULATE PIPES 3 FEET TO EITHER SIDE OF PENETRATION WITH MATERIAL SPECIFIED IN THE UL FIRE RESISTANCE DIRECTORY IF REQUIRED TO OBTAIN THE T- AND F- RATINGS.

1. WALL AND FLOOR
2. PIPE OR INSULATED PIPE
3. FIRE BARRIER - "3M PRODUCTS INC." FIRE BARRIER CAULK CP25 WB+, CP 25WB, CP 25 N/S AND S/L FIRE BARRIER 2000+, 2000 AND 2003 SILICONE SEALANTS, MOLDABLE PUTTY.
4. PIPE COVERING FOR FLAME RETARDANT POLYPROPYLENE ACID WASTE PIPING FIRE STOPPING ASSEMBLY.
5. STEEL COLLAR FOR FRPP FIRE STOPPING ASSEMBLY.
6. PACKING MATERIAL FOR FRPP FIRE STOPPING ASSEMBLY.

USE FOLLOWING APPLICABLE UL SYSTEMS FOR THE CONSTRUCTION TYPES LISTED.

CONSTRUCTION TYPE	THROUGH PENETRATION FIRESTOP SYSTEM NUMBERS
CONCRETE FLOORS	CAJ1007 (F-2, 3, 4 HR; T-0 HR), CAJ1010 (F-2 HR; T-0 HR), CAJ1012 (F-1 HR; T-0 HR), CAJ1017 (F-2, 3 HR; T-0 HR), CAJ1021 (F-3 HR; T-0, 1.5 HR), CAJ1027 (F-3 HR; T-0 HR), CAJ1044 (F-2, 3, 4 HR; T-0 HR), CAJ1058 (F-3 HR; T-3 HR), CAJ1063 (F-3 HR; T-0.5 HR), CAJ1112 (F-2 HR; T-0 HR), CAJ1175 (F-2 HR; T-0 HR), CAJ5001 (F-1.5, 2, 3 HR; T-0, 0.5, 0.75, 1 HR), CAJ5002 (F-2, 3 HR; T-0, 0.5, 1 HR), CAJ5003 (F-2 HR; T-0.5, 1 HR), CAJ5024 (F-2, 3 HR; T-1, 1.5 HR), CAJ5060 (F-2, 3 HR; T-0, 0.75, 1, 1.5 HR), CBJ1020 (F-4 HR; T-0, 0.75, 1.5 HR) FOR FLAME RETARDANT POLYPROPYLENE ACID WASTE PIPING USE SYSTEM NO. FA 2002 (F-1, 1.5,2 HR; T-1, 1.5, 2 HR)
CONCRETE OR MASONRY WALLS	CAJ1001 (F-3 HR; T-0 HR), CAJ1017 (F-2, 3 HR; T-0 HR), CAJ1021 (F-3 HR; T-0, 1.5 HR), CAJ1027 (F-3 HR; T-0 HR), CAJ1044 (F-2, 3, 4 HR; T-0 HR), CAJ1058 (F-3 HR; T-0 HR), CAJ1063 (F-3 HR; T-0.5 HR), CAJ1112 (F-2 HR; T-0 HR), CAJ1175 (F-2 HR; T-0 HR), CAJ5001 (F-1.5, 2, 3 HR; T-0, 0.5, 0.75, 1 HR), CAJ5002 (F-2, 3 HR; T-0, 0.5, 1 HR), CAJ5003 (F-2 HR; T-0.5, 1 HR), CAJ5024 (F-2, 3 HR; T-1, 1.5 HR), CAJ5060 (F-2, 3 HR; T-0, 0.75, 1, 1.5 HR), CBJ1020 (F-4 HR; T-0, 0.75, 1.5 HR)
GYPSUM WALLBOARD/STUD WALLS	WL1001 (F-1, 2, 3, 4 HR; T-0, 1, 2, 3, 4 HR), WL1002 (F-1, 2 HR; T-0 HR), WL1003 (F-1, 2 HR; T-0 HR), WL2002 (F-1, 1.5, 2 HR, T-0.75, 1, 1.5, 2 HR), WL2003 (F-1, 2 HR; T-1, 2 HR), WL2004 (F-2 HR; T-0.75, 1.5, 2 HR), WL2005 (F-1, 2 HR; T-0, 0.75, 1, 1.5, 2 HR), WL5001 (F-1, 2 HR; T-1, 1.5 HR), WL5002 (F-1, 2 HR; T-1, 2 HR)

PIPE PENETRATION THROUGH FIRE RATED PARTITIONS DETAIL
(5) NOT TO SCALE

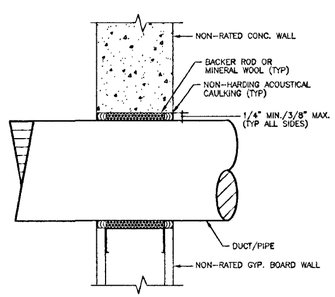

NOTES: 1. SEE DETAIL 2/M4.2 FOR FIRE-SMOKE DAMPERS AT RATED WALLS REQUIRING DAMPERS.
2. SEE DETAIL 3/M4.2, 4/M4.3, & 5/M4.2 FOR FIRE STOPPING AT RATED WALLS NOT REQUIRING DAMPERS.

FULL HEIGHT NON-RATED WALL PENETRATION DETAIL
(6) NOT TO SCALE

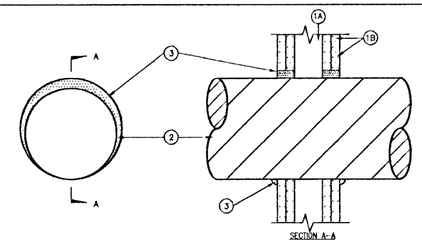

3M UL SYSTEM NO. WL7013

1. WALL ASSEMBLY - THE 2 HR FIRE RATED GYPSUM WALLBOARD/STUD WALL ASSEMBLY SHALL BE CONSTRUCTED OF THE MATERIALS AND IN THE MANNER SPECIFIED IN THE INDIVIDUAL U400 SERIES WALL AND PARTITION DESIGNS IN THE UL FIRE RESISTANCE DIRECTORY AND SHALL INCLUDE THE FOLLOWING CONSTRUCTION FEATURES:
   A. STUDS - WALL FRAMING SHALL CONSIST OF STEEL CHANNEL STUDS TO BE MIN 3-1/2 IN. WIDE AND SPACED MAX 24 IN. OC. ADDITIONAL 3-1/2 IN. WIDE STUDS SHALL BE USED TO COMPLETELY FRAME OPENING.
   B. WALLBOARD, GYPSUM* - TWO LAYERS OF MIN. 5/8 IN. THICK GYPSUM WALLBOARD, AS SPECIFIED IN THE INDIVIDUAL WALL AND PARTITION DESIGN. MAX DIAM. OF OPENING IS 17-1/2 IN.
2. THROUGH-PENETRATION - ONE STEEL DUCT TO BE INSTALLED EITHER CONCENTRICALLY OR ECCENTRICALLY WITHIN THE FIRESTOP SYSTEM. AN ANNULAR SPACE OF MIN 0 IN. TO MAX 1-1/2 IN. IS REQUIRED WITHIN THE FIRESTOP SYSTEM. STEEL DUCT TO BE RIGIDLY SUPPORTED ON BOTH SIDES OF WALL ASSEMBLY. THE FOLLOWING SIZES OF STEEL DUCTS MAY BE USED:
   A. STEEL DUCT - NOM 16 IN. DIAM (OR SMALLER) NO. 24 GAUGE (OR HEAVIER) SPIRAL WOUND GALV STEEL DUCT.
   B. STEEL VENT DUCT - NOM 10 IN. DIAM (OR SMALLER) NO. 28 GAUGE (OR HEAVIER) GALV STEEL VENT DUCT.
3. FILL, VOID OR CAVITY MATERIAL* - CAULK - MIN 1-1/4 IN. THICKNESS OF FILL MATERIAL APPLIED WITHIN ANNULUS, FLUSH WITH BOTH SURFACES OF WALL ASSEMBLY. AT THE POINT CONTACT LOCATION BETWEEN DUCT AND WALLBOARD, A MIN 1/4 IN. DIAM BEAD OF SEALANT SHALL BE APPLIED AT THE WALLBOARD/DUCT INTERFACE ON BOTH SURFACES OF WALL ASSEMBLY.

MINNESOTA MINING & MANUFACTURING CO. - CP-25 WB+

*BEARING THE UL CLASSIFICATION MARKING

NOTE: SUBMIT JOB SPECIFIC DETAILS FROM FIRESTOP MANUFACTURER FOR ALL OTHER APPLICATIONS AND WHERE ASSOCIATED OPENING EXCEED MAXIMUM PARTITION OPENING LISTED ABOVE. MANUFACTURER'S DETAILS FOR NON-TESTED DUCT SIZES TO BE BASED ON TEST RESULTS OF CURRENT UL LISTED APPLICATIONS IN SIMILAR CIRCUMSTANCES. DETAILS MUST BE APPROVED BY SITE INSPECTOR.

ROUND DUCT THRU-PENETRATION FIRESTOP
(3) NOT TO SCALE

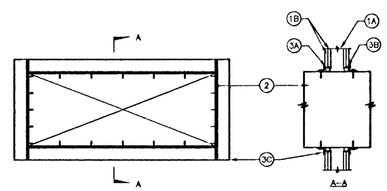

3M UL SYSTEM NO. WL7008

1. WALL ASSEMBLY - THE 1 AND 2 HR FIRE RATED GYPSUM WALLBOARD/STUD WALL ASSEMBLY SHALL BE CONSTRUCTED OF THE MATERIALS AND IN THE MANNER SPECIFIED IN THE INDIVIDUAL U400 SERIES WALL AND PARTITION DESIGNS IN THE UL FIRE RESISTANCE DIRECTORY AND SHALL INCLUDE THE FOLLOWING CONSTRUCTION FEATURES:
   A. STUDS - WALL FRAMING SHALL CONSIST OF STEEL CHANNEL STUDS TO BE MIN 3-1/2 IN. WIDE AND SPACED MAX 24 IN. OC. ADDITIONAL 3-1/2 IN. WIDE STEEL STUDS SHALL BE USED TO COMPLETELY FRAME OPENING.
   B. WALLBOARD, GYPSUM* - THICKNESS, TYPE, NUMBER OF LAYERS AND FASTENERS AS REQUIRED IN THE INDIVIDUAL WALL AND PARTITION DESIGN. MAX SIZE OF OPENING TO BE 1218 SQ. IN. WITH A MAX DIMENSION OF 38 IN.

   THE HOURLY F RATING OF THE FIRESTOP SYSTEM IS EQUAL TO THE HOURLY FIRE RATING OF THE WALL ASSEMBLY IN WHICH IT IS INSTALLED.
2. THROUGH-PENETRATION - NOM 38 IN. BY 30 (OR SMALLER) NO. 24 GAUGE (OR HEAVIER) GALV STEEL DUCT TO BE INSTALLED EITHER CONCENTRICALLY OR ECCENTRICALLY WITHIN THE FIRESTOP SYSTEM. AN ANNULAR SPACE OF MIN 0 IN. (POINT CONTACT) TO MAX 2 IN. IS REQUIRED WITHIN THE FIRESTOP SYSTEM. STEEL DUCT TO BE RIGIDLY SUPPORTED ON BOTH SIDES OF FLOOR OR WALL ASSEMBLY.
3. FIRESTOP SYSTEM - THE DETAILS OF THE FIRESTOP SYSTEM SHALL BE AS FOLLOWS:
   A. PACKING MATERIAL (OPTIONAL) - POLYETHYLENE BACKER ROD, MINERAL WOOL BATT INSULATION OR FIBERGLASS BATT INSULATION FRICTION-FIT INTO ANNULAR SPACE FOR 2 HR RATED WALL ASSEMBLIES ONLY. PACKING MATERIAL TO BE RECESSED FROM BOTH SURFACES OF WALL TO ACCOMODATE THE REQUIRED THICKNESS OF FILL MATERIAL (ITEM 3B).
   B. FILL, VOID OR CAVITY MATERIAL* - CAULK - MIN 5/8 IN. THICKNESS OF FILL MATERIAL APPLIED WITHIN ANNULUS, FLUSH WITH BOTH SURFACES OF WALL ASSEMBLY. AT THE POINT CONTACT LOCATION BETWEEN DUCT AND WALLBOARD, A MIN 1/4 IN. DIAM BEAD OF SEALANT SHALL BE APPLIED AT THE WALLBOARD/DUCT INTERFACE ON BOTH SURFACES OF WALL ASSEMBLY.

   MINNESOTA MINING & MANUFACTURING CO. - CP-25 WB+
   C. RETAINING ANGLES - MIN 18 GAUGE GALV STEEL ANGLES SIZED TO LAP DUCT A MIN OF 2 IN. AND LAP WALL SURFACES OF A MIN OF 1 IN. ANGLES ATTACHED TO DUCT ON BOTH SIDES OF WALL WITH MIN 1/2 IN. LONG, NO. 10 (OR LARGER) SHEET METAL SCREWS SPACED A MAX OF 1 IN. FROM EACH END OF DUCT AND SPACED A MAX OF 6 IN. OC.

*BEARING THE UL CLASSIFICATION MARKING

NOTE: SUBMIT JOB SPECIFIC DETAILS FROM FIRESTOP MANUFACTURER FOR ALL OTHER APPLICATIONS AND WHERE ASSOCIATED OPENING EXCEED MAXIMUM PARTITION OPENING LISTED ABOVE. MANUFACTURER'S DETAILS FOR NON TESTED DUCT SIZES TO BE BASED ON TEST RESULTS OF CURRENT UL LISTED APPLICATIONS IN SIMILAR CIRCUMSTANCES. DETAILS MUST BE APPROVED BY SITE INSPECTOR.

RECTANGULAR DUCT THRU-PENETRATION FIRESTOP
(4) NOT TO SCALE

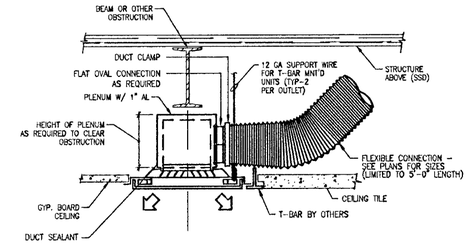

NOTES:
1. DETAIL SHALL APPLY TO SQUARE NECKED CEILING AIR OUTLETS AND OTHER CEILING OUTLETS THAT ARE LOCATED BELOW DUCTWORK, BEAMS OR OTHER OBSTACLES WHERE CLEARANCES WILL NOT ALLOW GRADUAL BENDING FLEX DUCT CONNECTIONS.
2. THE SIZE OF THE SUPPLY AIR PLENUM SHALL BE A MINIMUM OF 1" LARGER IN HEIGHT AND WIDTH THAN THE FLAT OVAL DUCTWORK CONNECTION. ACOUSTICAL LINER SHALL ALSO CLEAR AIR OUTLET NECK CONNECTION.
3. THE FOLLOWING SCHEDULE SHALL BE USED BY THE CONTRACTOR FOR ROUND TO FLAT OVAL DUCTWORK SIZE EQUIVALENTS:

ROUND, IN	FLAT OVAL (W"xH")
6"	7 x 4
8"	9 x 6, 10 x 4
10"	11 x 8, 12 x 6
12"	13 x 10, 14 x 8, 15 x 6
14"	15 x 12, 16 x 10, 17 x 8

4. THE CONTRACTOR SHALL BE RESPONSIBLE TO PROVIDING A ROUND TO FLAT OVAL TRANSITION SECTION OF DUCTWORK AS REQUIRED.

SQUARE NECK CEILING AIR OUTLET DETAIL
(1) NOT TO SCALE

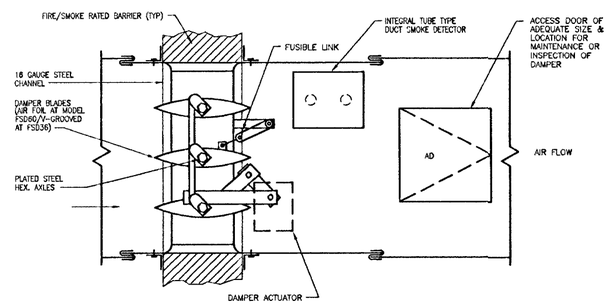

FSD-2

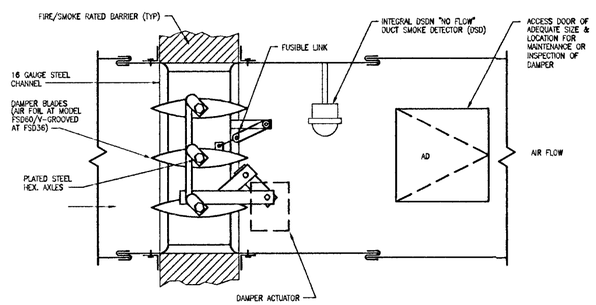

FSD-1

NOTES:
1. USE RUSKIN MODEL FSD 38 COMBINATION FIRE-SMOKE DAMPER (MODEL FSD60 WHERE UNDER 12" WIDE) WITH ELECTRIC DAMPER MOTOR AND SPRING RETURN FOR AUTOMATIC/FAIL-SAFE CLOSURE WHEN POWER IS INTERRUPTED VIA INTEGRAL SMOKE DETECTOR, LEAKAGE CLASS II MINIMUM, 165° FUSIBLE LINK AND REMOTE INDICATOR PANEL (TO BE CEILING OR WALL MOUNTED IN A LOCATION SELECTED BY ARCHITECT IN FIELD).
2. DAMPER, ELECTRIC ACTUATOR AND SMOKE DETECTOR SHALL CARRY CA. STATE FIRE MARSHALL LISTING NUMBER.
3. DAMPER SHALL BE CONSTRUCTED, TESTED & INSTALLED IN ACCORDANCE WITH U.L. STANDARDS 555 & 555S.
4. PROVIDE AT ALL AREA OR OCCUPANCY SEPARATION WALLS/CEILINGS AND PENETRATIONS OF FIRE RATED EXIT CORRIDORS AND STAIR WALLS/CEILINGS WHERE DUCTS OPEN INTO CORRIDOR OR STAIR.
5. COORDINATE ELECTRICAL POWER REQUIREMENTS WITH ELECTRICAL CONTRACTOR. NOTE - INTEGRAL SMOKE DETECTOR SHALL ALSO SIGNAL BUILDING FIRE ALARM PANEL.

FIRE - SMOKE DAMPER FSD-1 AND 2 DETAILS
(2) NOT TO SCALE

FIELD PAOLI

Architecture
1045 Sansome St.
Suite 206
San Francisco
California, 94111
Tel. 415. 788. 6606
Fax 415. 788. 6650

SARATOGA LIBRARY

SANTA CLARA COUNTY LIBRARY

13650 Saratoga Avenue
Saratoga, California 95070

MECHANICAL DESIGN STUDIO Inc
3330 Clayton Rd., Suite B
Concord California 94519-2638
tel 925. 680 6858
fax 925. 680 4348
www.mds-ef.com
PROJECT # 3024.00

DATE	OCTOBER 28, 2001
REVISIONS	
	CONSTRUCTION DOCUMENTS BID SET

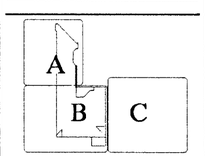

DETAILS CONTINUED

SCALE	AS NOTED
DRAWN BY	JLW/LK
CHECKED BY	DA
JOB NO.	0101

PHASE 2

SHEET NO. M4.2

All drawings and written material appearing herein constitute the original and unpublished work of the architect and the same may not be duplicated, used, or disclosed without the written consent of the architect ©Field Paoli

11/02/01 2:02:24 PM F:\JC-3000\3024-1.003\DRAWINGS\3024M42.DWG

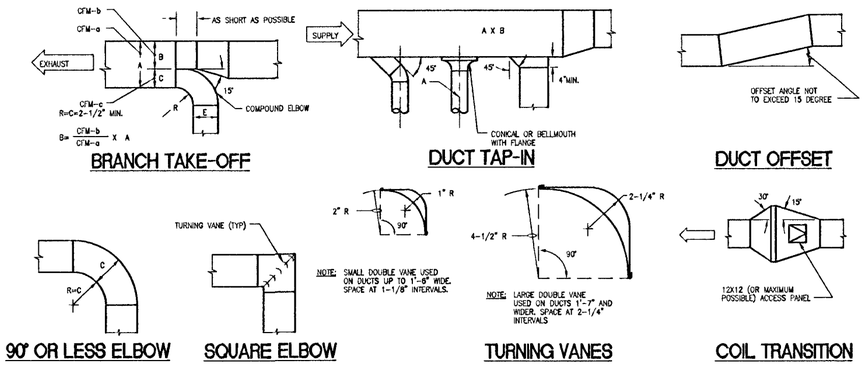

7 LOW VELOCITY DUCT CONSTRUCTION DETAILS
NO SCALE

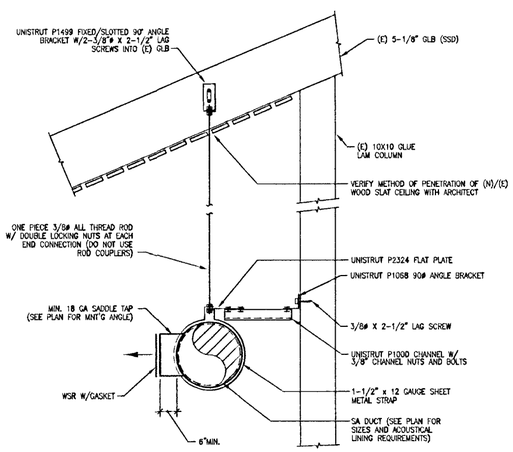

8 EXPOSED SUPPLY AIR DUCT DETAIL
NOT TO SCALE

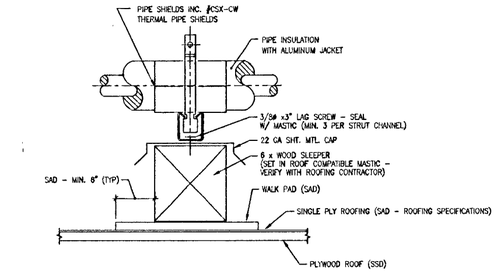

SECTION A-A

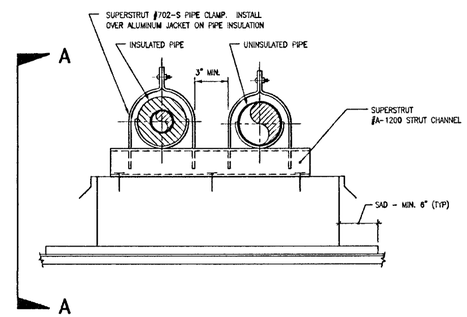

4 ROOF MOUNTED PIPE SUPPORT DETAIL
SCALE: NONE

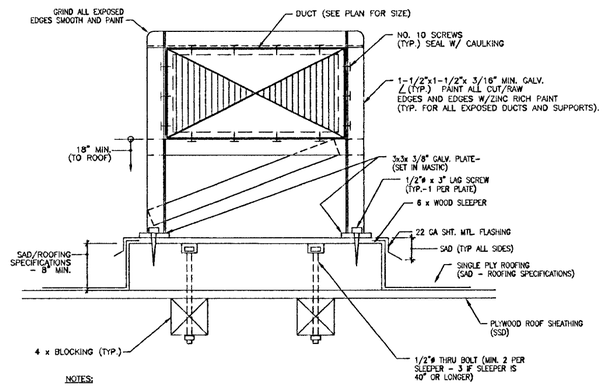

NOTES:
1. COORDINATE "ROOFED" SLEEPER LOCATIONS WITH GENERAL CONTRACTOR PRIOR TO ROOFING.

5 ROOF MOUNTED DUCT SUPPORT DETAIL
SCALE: NOT TO SCALE

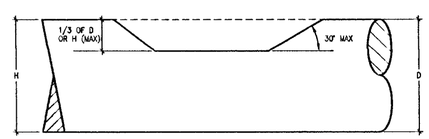

NOTES: 1. CONTINUOUSLY SOLDER ALL JOINTS
2. SEE PLANS FOR REQUIRED LOCATIONS - PROVIDE ADDITIONAL NOTCHES IN OTHER LOCATIONS AS REQUIRED.

6 TYPICAL DUCT NOTCH DETAIL
SCALE: NONE

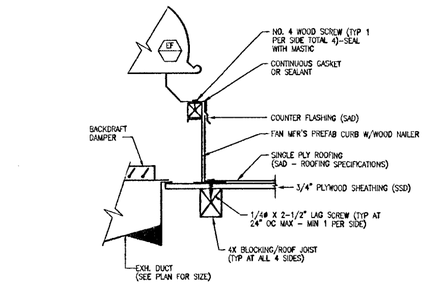

TYPICAL ROOF MOUNTED EXHAUST FAN DETAIL (GRAVITY HOODS SIMILAR)
1 NOT TO SCALE

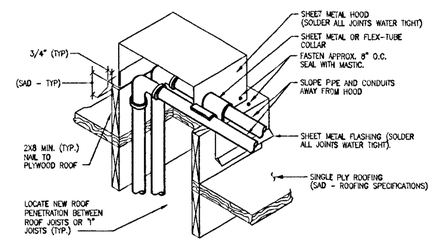

NOTES: 1. INCREASE HEIGHTS OF WOOD CURB AS REQUIRED TO ACCOMMODATE RIGID INSULATION AT CRICKETED AREAS - COORDINATE WITH GENERAL CONTRACTOR.
2. COORDINATE QUANTITY OF CONDUITS WITH ELECTRICAL CONTRACTOR (INCLUDE ANY ASSOCIATED POWER AND CONTROLS CONDUITS IN SAME HOOD).

MULTIPLE PIPES THRU ROOF PENETRATION DETAIL
2 NOT TO SCALE

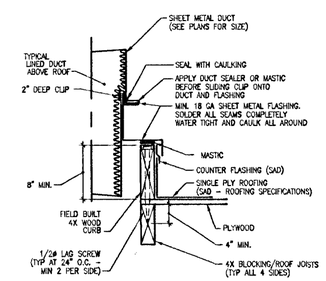

NOTE: 1. INCREASE HEIGHTS OF WOOD CURB AS REQUIRED TO ACCOMMODATE RIGID INSULATION AT CRICKETED AREAS - COORDINATE WITH GENERAL CONTRACTOR.

3 DUCT THRU ROOF DETAIL
NOT TO SCALE

FIELD PAOLI

Architecture
1045 Sansome St.
Suite 206
San Francisco
California, 94111
Tel. 415. 788. 6606
Fax 415. 788. 6650

SARATOGA LIBRARY

SANTA CLARA COUNTY LIBRARY

13650 Saratoga Avenue
Saratoga, California 95070

MECHANICAL DESIGN STUDIO inc
3330 Clayton Rd. Suite B
Concord California 94519-2838
tel 925. 680 5658
fax 925. 680 4348
www.mds-ac.com
PROJECT # 3024.00

DATE	OCTOBER 28, 2001
REVISION#	
	CONSTRUCTION DOCUMENTS
	BID SET

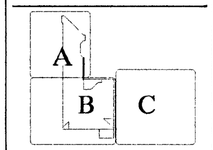

DETAILS CONTINUED

SCALE	AS NOTED
DRAWN BY	JLW/LK
CHECKED BY	DA
JOB NO.	0101

PHASE 2

SHEET NO. **M4.3**

All drawings and written material appearing herein constitute the original and unpublished work of the architect and the same may not be duplicated, used, or disclosed without the written consent of the architect ©Field Paoli

11/02/01 2:02:47 PM FVC_3000\3024-1.003\DRAWINGS\3024M4.3.DWG

PERFORMANCE CERTIFICATE OF COMPLIANCE Part 1 of 3 PERF-1

PROJECT NAME: Saratoga Library	DATE: 9/13/2001
PROJECT ADDRESS: 13650 Saratoga Avenue Saratoga	Building Permit #
PRINCIPAL DESIGNER - ENVELOPE: Field Paoli Architecture	TELEPHONE: (415) 788-6606
DOCUMENTATION AUTHOR: Gabel Dodd / EnergySoft, llc	TELEPHONE: (415) 883-5900

Checked by/Date
Enforcement Agency Use

GENERAL INFORMATION

DATE OF PLANS	BUILDING CONDITIONED FLOOR AREA	CLIMATE ZONE
9/13/01	48,267 Sq.Ft.	4

BUILDING TYPE: [X] NONRESIDENTIAL [ ] HIGH RISE RESIDENTIAL [ ] HOTEL/MOTEL GUEST ROOM

PHASE OF CONSTRUCTION: [X] NEW CONSTRUCTION [ ] ADDITION [ ] ALTERATION [ ] EXISTING + ADDITION

STATEMENT OF COMPLIANCE

This Certificate of Compliance lists the building features and performance specifications needed to comply with Title 24, Parts 1 and 6, of the State Building Code. This certificate applies only to a Building using the performance compliance approach.

DOCUMENTATION AUTHOR: Ted M. Tiffany — SIGNATURE: Ted M. Tiffany — DATE: 9/18/01

The Principal Designers hereby certify that the proposed building design represented in the construction documents and modelled for this permit application are consistent with all other forms and worksheets, specifications, and other calculations submitted with this permit application. The proposed building as designed meets the energy efficiency requirements of the State Building Code, Title 24, Part 6.

ENV. LTG. MECH.

[ ] [ ] [X] 1. I hereby affirm that I am eligible under the provisions of Division 3 of the Business and Professions Code to sign this document as the person responsible for its preparation; and that I am licensed as a civil engineer, mechanical engineer, electrical engineer or architect.

[ ] [ ] [ ] 2. I affirm that I am eligible under the provisions of Division 3 of the Business and Professions Code Section 5537.2 or 6737.3 to sign this document as the person responsible for its preparation; and that I am a licensed contractor preparing documents for work that I have contracted to perform.

[ ] [ ] [ ] 3. I affirm that I am eligible under Division 3 of the Business and Professions Code to sign this document because it pertains to a structure or type of work described as exempt pursuant to Business and Professions Code Sections 5537, 5538, and 6737.1. (These sections of the Business and Professions Code are printed in full in the Nonresidential Manual.)

ENVELOPE COMPLIANCE

Indicate location on plans of Note Block for Mandatory Measures: Required Forms: ENV-1

PRINCIPAL ENVELOPE DESIGNER - NAME: Field Paoli Architecture — SIGNATURE: — LIC. NO.: — DATE:

LIGHTING COMPLIANCE

Indicate location on plans of Note Block for Mandatory Measures: Lighting Compliance Not In The Scope Of This Submittal — Required Forms:

PRINCIPAL LIGHTING DESIGNER - NAME: — SIGNATURE: — LIC. NO.: — DATE:

MECHANICAL COMPLIANCE

Indicate location on plans of Note Block for Mandatory Measures: M5.3 — Required Forms: MECH-1, MECH-2, MECH-3

PRINCIPAL MECHANICAL DESIGNER - NAME: MECHANICAL DESIGN STUDIO, INC — SIGNATURE: — LIC. NO.: M86501 — DATE: 10/20/01

Run Initiation Time: 09/13/01 11:12:32 Run Code: 1000404752

PERFORMANCE CERTIFICATE OF COMPLIANCE Part 2 of 3 PERF-1

PROJECT NAME: Saratoga Library — DATE: 9/13/2001

ANNUAL SOURCE ENERGY USE SUMMARY (kBtu/sqft-yr)

ENERGY COMPONENT	Standard Design	Proposed Design	Compliance Margin
Space Heating	22.46	19.91	2.55
Space Cooling	34.52	30.84	3.68
Indoor Fans	29.93	26.06	3.87
Heat Rejection	0.00	0.00	0.00
Pumps & Misc.	4.61	2.83	1.77
Domestic Hot Water	0.00	0.00	0.00
Lighting	35.33	35.33	0.00
Receptacle	25.41	25.41	0.00
Process	0.00	0.00	0.00
TOTALS:	152.26	140.39	11.87

Standard / Proposed

BUILDING COMPLIES

GENERAL INFORMATION

Building Orientation	(Southwest) 225 deg	Conditioned Floor Area	48,267 sqft
Number of Stories	1	Unconditioned Floor Area	0 sqft
Number of Systems	3	Conditioned Footprint Area	48,267 sqft
Number of Zones	46		

	Orientation	Gross Area	Glazing Area	Glazing Ratio
Front Elevation	(Southwest)	2,939 sqft	480 sqft	16.3%
Left Elevation	(Northwest)	5,520 sqft	1,183 sqft	21.4%
Rear Elevation	(Northeast)	6,896 sqft	1,965 sqft	28.5%
Right Elevation	(Southeast)	5,056 sqft	1,064 sqft	21.0%
Total		20,415 sqft	4,692 sqft	23.0%
Roof		50,158 sqft	0 sqft	0.0%

	Standard	Proposed
Lighting Power Density	1.200 W/sqft	0.000 W/sqft
Prescriptive Env Heat Loss	8,102	5,911
Prescriptive Env Heat Gain	740,512	582,497

Remarks:

Run Initiation Time: 09/13/01 11:12:32 Run Code: 1000404752

PERFORMANCE CERTIFICATE OF COMPLIANCE Part 3 of 3 PERF-1

PROJECT NAME: Saratoga Library — DATE: 9/13/2001

ZONE INFORMATION

System Name	Zone Name	Occupancy Type	Floor Area (sqft)	Inst. LPD (W/sf)	Ctrl. Credits (W/sf)[1]	Exceptional LPD (W/sf)[2]	Exceptional Vent. (cfm/sf)	Proc. Loads (W/sf)
AC-3	VAV 3-8	Library - Reading Area	112	0.000				
	VAV 3-7	Library - Reading Area	1,118	0.000				
	VAV 3-6	Library - Reading Area	1,560	0.000				
	VAV 3-5	Library - Reading Area	120	0.000				
	VAV 3-4	Library - Reading Area	88	0.000				
	VAV 3-3	Library - Reading Area	728	0.000				
	VAV 3-2	Library - Reading Area	160	0.000				
	VAV 3-1	Library - Reading Area	170	0.000				
	SFP 3-12	Library - Reading Area	854	0.000				
	SFP 3-11	Library - Reading Area	698	0.000				
	SFP 3-10	Library - Reading Area	1,498	0.000				
	SFP 3-9	Library - Reading Area	820	0.000				
	SFP 3-8	Library - Reading Area	1,498	0.000				
	SFP 3-7	Library - Reading Area	2,092	0.000				
	SFP 3-6	Library - Reading Area	1,071	0.000				
	SFP 3-5	Library - Reading Area	1,388	0.000				
	SFP 3-4	Library - Reading Area	1,008	0.000				
	SFP 3-3	Library - Reading Area	1,880	0.000				
	SFP 3-2	Library - Reading Area	1,188	0.000				
	SFP 3-1	Library - Reading Area	792	0.000				

Notes: 1 See LTG-1 (items marked with asterisk, see LTG-2 by others) 2 See LTG-3 3 See LTG-4 — Items above require special documentation

EXCEPTIONAL CONDITIONS COMPLIANCE CHECKLIST

The local enforcement agency should pay special attention to the items specified in this checklist. These items require special written justification and documentation, and special verification to be used with the performance approach. The local enforcement agency determines the adequacy of the justification, and may reject a building or design that otherwise complies based on the adequacy of the special justification and documentation submitted.

	Plan	Field
The HVAC System "SXHF-C58" includes a Variable Speed Drive on the Fan.		
The HVAC System "SXHF-C55-2" includes a Variable Speed Drive on the Fan.		
The HVAC System "SXHF-C60" includes a Variable Speed Drive on the Fan.		

The exceptional features listed in this performance approach application have specifically been reviewed. Adequate written justification and documentation for their use have been provided by the applicant.

Authorized Signature or Stamp

Run Initiation Time: 09/13/01 11:12:32 Run Code: 1000404752

PERFORMANCE CERTIFICATE OF COMPLIANCE Part 3 of 3 PERF-1

PROJECT NAME: Saratoga Library — DATE: 9/13/2001

ZONE INFORMATION

System Name	Zone Name	Occupancy Type	Floor Area (sqft)	Inst. LPD (W/sf)	Ctrl. Credits (W/sf)[1]	Exceptional LPD (W/sf)[2]	Exceptional Vent. (cfm/sf)	Proc. Loads (W/sf)
	SFP 1-6	Library - Reading Area	1,260	0.000				
	SFP 1-5	Library - Reading Area	792	0.000				
	SFP 1-4	Library - Reading Area	1,080	0.000				
	SFP 1-3	Library - Reading Area	1,810	0.000				
	SFP 1-2	Library - Reading Area	2,077	0.000				
	SFP 1-1	Library - Reading Area	1,028	0.000				

Notes: 1 See LTG-1 (items marked with asterisk, see LTG-2 by others) 2 See LTG-3 3 See LTG-4 — Items above require special documentation

EXCEPTIONAL CONDITIONS COMPLIANCE CHECKLIST

The local enforcement agency should pay special attention to the items specified in this checklist. These items require special written justification and documentation, and special verification to be used with the performance approach. The local enforcement agency determines the adequacy of the justification, and may reject a building or design that otherwise complies based on the adequacy of the special justification and documentation submitted.

	Plan	Field

The exceptional features listed in this performance approach application have specifically been reviewed. Adequate written justification and documentation for their use have been provided by the applicant.

Authorized Signature or Stamp

Run Initiation Time: 09/13/01 11:12:32 Run Code: 1000404752

ENVELOPE COMPLIANCE SUMMARY Performance ENV-1

PROJECT NAME: Saratoga Library — DATE: 9/13/2001

OPAQUE SURFACES

#	Surface Type	Framing Type	Area	U-Fac.	Act. Azm.	Solar Gains Tilt	Solar Gains Y/N	Form 3 Reference	Location / Comments
1	Roof	Wood	1,112	0.034	0	0	X	R-30 Roof (R.30.2x12.16)	VAV 3-8
2	Roof	Wood	1,118	0.034	0	0	X	R-30 Roof (R.30.2x12.16)	VAV 3-7
3	Roof	Wood	1,560	0.034	0	0	X	R-30 Roof (R.30.2x12.16)	VAV 3-6
4	Roof	Wood	120	0.034	0	0	X	R-30 Roof (R.30.2x12.16)	VAV 3-5
5	Roof	Wood	88	0.034	0	0	X	R-30 Roof (R.30.2x12.16)	VAV 3-4
6	Roof	Wood	728	0.034	0	0	X	R-30 Roof (R.30.2x12.16)	VAV 3-3
7	Roof	Wood	160	0.034	0	0	X	R-30 Roof (R.30.2x12.16)	VAV 3-2
8	Roof	Wood	170	0.034	0	0	X	R-30 Roof (R.30.2x12.16)	VAV 3-1
9	Roof	Wood	992	0.034	0	0	X	R-30 Roof (R.30.2x12.16)	SFP 3-12
10	Wall	Wood	398	0.065	135	90	X	R-19 Wall (W.19.2x6.16)	SFP 3-12
11	Wall	Wood	48	0.065	225	90	X	R-19 Wall (W.19.2x6.16)	SFP 3-12
12	Wall	Wood	48	0.065	45	90	X	R-19 Wall (W.19.2x6.16)	SFP 3-12
13	Roof	Wood	728	0.034	0	0	X	R-30 Roof (R.30.2x12.16)	SFP 3-11
14	Roof	Wood	1,571	0.034	0	0	X	R-30 Roof (R.30.2x12.16)	SFP 3-10
15	Wall	Wood	518	0.065	45	90	X	R-19 Wall (W.19.2x6.16)	SFP 3-10
16	Wall	Wood	428	0.065	135	90	X	R-19 Wall (W.19.2x6.16)	SFP 3-10
17	Wall	Wood	118	0.065	225	90	X	R-19 Wall (W.19.2x6.16)	SFP 3-10
18	Wall	Wood	138	0.065	315	90	X	R-19 Wall (W.19.2x6.16)	SFP 3-10
19	Roof	Wood	692	0.034	0	0	X	R-30 Roof (R.30.2x12.16)	SFP 3-9
20	Wall	Wood	24	0.065	135	90	X	R-19 Wall (W.19.2x6.16)	SFP 3-9

FENESTRATION SURFACES

Site Assembled Glazing [ ] Check box if Building is >= 100,000 sqft of CFA and >= 10,000 sqft vertical glazing then NFRC Certification is required. Follow NFRC 100-5B Procedures and submit NFRC Label Certificate Form.

#	Type	Area	U-Fac.	Act. Azm.	SHGC	Glazing Type	Location / Comments
1	Window	52	0.570	135	0.42	PPG Solarbronze	SFP 3-12
2	Window	56	0.570	135	0.42	PPG Solarbronze	SFP 3-10
3	Window	21	0.570	225	0.42	PPG Solarbronze	SFP 3-10
4	Window	21	0.570	225	0.42	PPG Solarbronze	SFP 3-9
5	Window	52	0.570	225	0.42	PPG Solarbronze	SFP 3-9
6	Window	28	0.570	0	0.42	PPG Solarbronze	SFP 3-8
7	Window	140	0.570	45	0.42	PPG Solarbronze	SFP 3-8
8	Window	28	0.570	90	0.42	PPG Solarbronze	SFP 3-8
9	Window	21	0.570	135	0.42	PPG Solarbronze	SFP 3-8
10	Window	126	0.570	135	0.42	PPG Solarbronze	SFP 3-8
11	Window	56	0.570	45	0.42	PPG Solarbronze	SFP 3-5
12	Window	56	0.570	135	0.42	PPG Solarbronze	SFP 3-5
13	Window	68	0.570	45	0.42	PPG Solarbronze	SFP 3-4
14	Window	344	0.570	45	0.42	PPG Solarbronze	SFP 3-4
15	Window	48	0.570	315	0.42	PPG Solarbronze	SFP 3-4

EXTERIOR SHADING

#	Exterior Shade Type	SHGC	Window Hgt. Wd.	Overhang Len. Hgt. LExt.RExt.	Left Fin Dist. Len. Hgt.	Right Fin Dist. Len. Hgt.
1	None	0.78				
2	None	0.78				
3	None	0.78				
4	None	0.78				
5	None	0.78				
6	None	0.78				
7	None	0.78				
8	None	0.78				
9	None	0.78				
10	None	0.78				
11	None	0.78				
12	None	0.78				
13	None	0.78				
14	None	0.78				
15	None	0.78				

Run Initiation Time: 09/13/01 11:12:32 Run Code: 1000404752

ENVELOPE COMPLIANCE SUMMARY Performance ENV-1

PROJECT NAME: Saratoga Library — DATE: 9/13/2001

OPAQUE SURFACES

#	Surface Type	Framing Type	Area	U-Fac.	Act. Azm.	Solar Gains Tilt	Solar Gains Y/N	Form 3 Reference	Location / Comments
21	Wall	Wood	407	0.065	225	90	X	R-19 Wall (W.19.2x6.16)	SFP 3-9
22	Wall	Wood	54	0.065	315	90	X	R-19 Wall (W.19.2x6.16)	SFP 3-9
23	Roof	Wood	1,574	0.034	0	0	X	R-30 Roof (R.30.2x12.16)	SFP 3-8
24	Wall	Wood	15	0.065	0	90	X	R-19 Wall (W.19.2x6.16)	SFP 3-8
25	Wall	Wood	540	0.065	45	90	X	R-19 Wall (W.19.2x6.16)	SFP 3-8
26	Wall	Wood	15	0.065	90	90	X	R-19 Wall (W.19.2x6.16)	SFP 3-8
27	Roof	Wood	2,197	0.034	0	0	X	R-30 Roof (R.30.2x12.16)	SFP 3-7
28	Roof	Wood	1,124	0.034	0	0	X	R-30 Roof (R.30.2x12.16)	SFP 3-6
29	Wall	Wood	48	0.065	45	90	X	R-19 Wall (W.19.2x6.16)	SFP 3-6
30	Wall	Wood	387	0.065	135	90	X	R-19 Wall (W.19.2x6.16)	SFP 3-6
31	Roof	Wood	1,458	0.034	0	0	X	R-30 Roof (R.30.2x12.16)	SFP 3-5
32	Wall	Wood	472	0.065	45	90	X	R-19 Wall (W.19.2x6.16)	SFP 3-5
33	Wall	Wood	272	0.065	315	90	X	R-19 Wall (W.19.2x6.16)	SFP 3-5
34	Wall	Wood	278	0.065	135	90	X	R-19 Wall (W.19.2x6.16)	SFP 3-5
35	Roof	Wood	1,008	0.034	0	0	X	R-30 Roof (R.30.2x12.16)	SFP 3-4
36	Wall	Wood	207	0.065	45	90	X	R-19 Wall (W.19.2x6.16)	SFP 3-4
37	Wall	Wood	96	0.065	315	90	X	R-19 Wall (W.19.2x6.16)	SFP 3-4
38	Wall	Wood	96	0.065	135	90	X	R-19 Wall (W.19.2x6.16)	SFP 3-4
39	Roof	Wood	1,880	0.034	0	0	X	R-30 Roof (R.30.2x12.16)	SFP 3-3
40	Wall	Wood	249	0.065	315	90	X	R-19 Wall (W.19.2x6.16)	SFP 3-3

FENESTRATION SURFACES

Site Assembled Glazing [ ] Check box if Building is >= 100,000 sqft of CFA and >= 10,000 sqft vertical glazing then NFRC Certification is required. Follow NFRC 100-5B Procedures and submit NFRC Label Certificate Form.

#	Type	Area	U-Fac.	Act. Azm.	SHGC	Glazing Type	Location / Comments
16	Window	48	0.570	135	0.42	PPG Solarbronze	SFP 3-4
17	Window	48	0.570	315	0.42	PPG Solarbronze	SFP 3-3
18	Window	48	0.570	315	0.42	PPG Solarbronze	SFP 3-3
19	Window	96	0.570	315	0.42	PPG Solarbronze	SFP 3-2
20	Window	96	0.570	135	0.42	PPG Solarbronze	SFP 3-2
21	Window	48	0.570	315	0.42	PPG Solarbronze	SFP 3-1
22	Window	48	0.570	135	0.42	PPG Solarbronze	SFP 3-1
23	Window	48	0.570	45	0.42	PPG Solarbronze	SFP 3-1
24	Window	344	0.570	45	0.42	PPG Solarbronze	SFP 3-1
25	Window	292	0.570	45	0.42	PPG Solarbronze	SFP 2-7
26	Window	56	1.200	135	0.80	Single Metal Clear Default	SFP 2-6
27	Window	218	1.200	135	0.80	Single Metal Clear Default	SFP 2-6
28	Window	48	0.570	315	0.42	PPG Solarbronze	SFP 2-5
29	Window	24	1.200	45	0.80	Single Metal Clear Default	SFP 2-5
30	Window	158	1.200	45	0.80	Single Metal Clear Default	SFP 2-5

EXTERIOR SHADING

#	Exterior Shade Type	SHGC	Window Hgt. Wd.	Overhang Len. Hgt. LExt.RExt.	Left Fin Dist. Len. Hgt.	Right Fin Dist. Len. Hgt.
16	None	0.78				
17	None	0.78				
18	None	0.78				
19	None	0.78				
20	None	0.78				
21	None	0.78				
22	None	0.78				
23	None	0.78				
24	None	0.78				
25	None	0.78				
26	None	0.78				
27	None	0.78				
28	None	0.78				
29	None	0.78				
30	None	0.78				

Run Initiation Time: 09/13/01 11:12:32 Run Code: 1000404752

ENVELOPE COMPLIANCE SUMMARY Performance ENV-1

PROJECT NAME: Saratoga Library — DATE: 9/13/2001

OPAQUE SURFACES

#	Surface Type	Framing Type	Area	U-Fac.	Act. Azm.	Solar Gains Tilt	Solar Gains Y/N	Form 3 Reference	Location / Comments
41	Wall	Wood	240	0.065	135	90	X	R-19 Wall (W.19.2x6.16)	SFP 3-3
42	Roof	Wood	1,188	0.034	0	0	X	R-30 Roof (R.30.2x12.16)	SFP 3-2
43	Wall	Wood	192	0.065	315	90	X	R-19 Wall (W.19.2x6.16)	SFP 3-2
44	Wall	Wood	192	0.065	135	90	X	R-19 Wall (W.19.2x6.16)	SFP 3-2
45	Roof	Wood	792	0.034	0	0	X	R-30 Roof (R.30.2x12.16)	SFP 3-1
46	Wall	Wood	144	0.065	315	90	X	R-19 Wall (W.19.2x6.16)	SFP 3-1
47	Wall	Wood	144	0.065	135	90	X	R-19 Wall (W.19.2x6.16)	SFP 3-1
48	Wall	Wood	207	0.065	45	90	X	R-19 Wall (W.19.2x6.16)	SFP 3-1
49	Roof	Wood	1,714	0.034	0	0	X	R-30 Roof (R.30.2x12.16)	SFP 2-7
50	Wall	Wood	134	0.065	135	90	X	R-19 Wall (W.19.2x6.16)	SFP 2-7
51	Wall	Wood	804	0.065	45	90	X	R-19 Wall (W.19.2x6.16)	SFP 2-7
52	Roof	Wood	1,079	0.034	0	0	X	R-30 Roof (R.30.2x12.16)	SFP 2-6
53	Wall	Wood	652	0.065	135	90	X	R-19 Wall (W.19.2x6.16)	SFP 2-6
54	Wall	Wood	115	0.065	90	90	X	R-19 Wall (W.19.2x6.16)	SFP 2-6
55	Wall	Wood	191	0.065	315	90	X	R-19 Wall (W.19.2x6.16)	SFP 2-5
56	Wall	Wood	55	0.065	45	90	X	R-19 Wall (W.19.2x6.16)	SFP 2-5
57	Roof	Wood	1,478	0.034	0	0	X	R-30 Roof (R.30.2x12.16)	SFP 2-5
58	Wall	Wood	48	0.065	90	90	X	R-19 Wall (W.19.2x6.16)	SFP 2-5
59	Roof	Wood	1,358	0.034	0	0	X	R-30 Roof (R.30.2x12.16)	SFP 2-4
60	Roof	Wood	1,793	0.034	0	0	X	R-30 Roof (R.30.2x12.16)	SFP 2-3

FENESTRATION SURFACES

Site Assembled Glazing [ ] Check box if Building is >= 100,000 sqft of CFA and >= 10,000 sqft vertical glazing then NFRC Certification is required. Follow NFRC 100-5B Procedures and submit NFRC Label Certificate Form.

#	Type	Area	U-Fac.	Act. Azm.	SHGC	Glazing Type	Location / Comments
31	Window	96	0.570	225	0.42	PPG Solarbronze	VAV 2-8
32	Window	48	0.570	135	0.42	PPG Solarbronze	VAV 2-8
33	Window	96	0.570	225	0.42	PPG Solarbronze	VAV 2-4
34	Window	21	0.570	225	0.42	PPG Solarbronze	VAV 2-3
35	Window	48	0.570	225	0.42	PPG Solarbronze	VAV 2-3
36	Window	21	0.570	315	0.42	PPG Solarbronze	VAV 2-3
37	Window	96	0.570	315	0.42	PPG Solarbronze	VAV 2-3
38	Window	48	0.570	315	0.42	PPG Solarbronze	VAV 2-2
39	Window	168	0.570	45	0.42	PPG Solarbronze	VAV 1-3
40	Window	196	0.570	45	0.42	PPG Solarbronze	VAV 1-1
41	Window	192	0.570	0	0.42	PPG Solarbronze	SFP 1-7
42	Window	21	0.570	315	0.42	PPG Solarbronze	SFP 1-7
43	Window	45	0.570	315	0.42	PPG Solarbronze	SFP 1-7
44	Window	420	0.570	315	0.42	PPG Solarbronze	SFP 1-5
45	Window	117	1.200	180	0.80	Single Metal Clear Default	SFP 1-3

EXTERIOR SHADING

#	Exterior Shade Type	SHGC	Window Hgt. Wd.	Overhang Len. Hgt. LExt.RExt.	Left Fin Dist. Len. Hgt.	Right Fin Dist. Len. Hgt.
31	None	0.78				
32	None	0.78				
33	None	0.78				
34	None	0.78				
35	None	0.78				
36	None	0.78				
37	None	0.78				
38	None	0.78				
39	None	0.78				
40	None	0.78				
41	None	0.78				
42	None	0.78				
43	None	0.78				
44	None	0.78				
45	None	0.78				

Run Initiation Time: 09/13/01 11:12:32 Run Code: 1000404752

FIELD PAOLI

Architecture
1045 Sansome St.
Suite 206
San Francisco
California, 94111
Tel. 415. 788. 6606
Fax 415. 788. 6650

SARATOGA LIBRARY

SANTA CLARA COUNTY LIBRARY

13650 Saratoga Avenue
Saratoga, California 95070

MECHANICAL DESIGN STUDIO inc
3440 Clayton Rd. Suite B
Concord California 94519-2838
tel 925. 680 6858
fax 925. 680 4348
www.mds-ef.com
PROJECT # 3024.00

REGISTERED PROFESSIONAL ENGINEER No. M 26501 Expires 6/30/02 STATE OF CALIFORNIA

REGISTERED ARCHITECT NO. C 13908 REN. STATE OF CALIFORNIA

DATE: OCTOBER 26, 2001

REVISIONS

CONSTRUCTION DOCUMENTS
BID SET

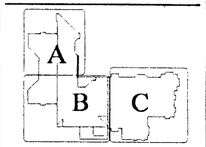

TITLE 24 DOCUMENTATION

SCALE: NONE
DRAWN BY: JLW/LK
CHECKED BY: DA
JOB NO.: 0101

PHASE 2

SHEET NO. **M5.1**

All drawings and written material appearing herein constitute the original and unpublished work of the architect and the same may not be duplicated, used, or disclosed without the written consent of the architect ©Field Paoli

10/26/01 9:06:30 AM F:\C_3000\3024.00_SARATOGA LIBRARY\DRAWINGS\3024M51.DWG

ENVELOPE COMPLIANCE SUMMARY — Performance ENV-1

PROJECT NAME: Saratoga Library — DATE: 9/13/2001

OPAQUE SURFACES

#	Surface Type	Framing Type	Area	U-Fac.	Act. Azm.	Tilt	Solar Gains Y/N	Form 3 Reference	Location / Comments
61	Roof	Wood	848	0.034	0	0	X	R-30 Roof (R.30 2x12.16)	SFP 2-2
62	Roof	Wood	848	0.034	0	0	X	R-30 Roof (R.30 2x12.16)	SFP 2-1
63	Roof	Wood	983	0.034	0	0	X	R-30 Roof (R.30.2x12.16)	VAV 2-8
64	Roof	Wood	781	0.034	0	0	X	R-30 Roof (R.30.2x12.16)	VAV 2-7
65	Roof	Wood	567	0.034	0	0	X	R-30 Roof (R.30 2x12.16)	VAV 2-6
66	Wall	Wood	69	0.065	225	90	X	R-19 Wall (W.19 2x6.16)	VAV 2-6
67	Wall	Wood	204	0.065	135	90	X	R-19 Wall (W.19.2x6.16)	VAV 2-6
68	Roof	Wood	1,242	0.034	0	0	X	R-30 Roof (R.30.2x12.16)	VAV 2-5
69	Wall	Wood	24	0.065	225	90	X	R-19 Wall (W.19.2x6.16)	VAV 2-5
70	Roof	Wood	1,004	0.034	0	0	X	R-30 Roof (R.30.2x12.16)	VAV 2-4
71	Wall	Wood	268	0.065	225	90	X	R-19 Wall (W.19.2x6.16)	VAV 2-4
72	Wall	Wood	182	0.065	315	90	X	R-19 Wall (W.19.2x6.16)	VAV 2-4
73	Door	None	42	0.581	315	90	X	Hollow Metal Door	VAV 2-4
74	Roof	Wood	1,040	0.034	0	0	X	R-30 Roof (R.30.2x12.16)	VAV 2-3
75	Wall	Wood	318	0.065	225	90	X	R-19 Wall (W.19.2x6.16)	VAV 2-3
76	Wall	Wood	72	0.065	315	90	X	R-19 Wall (W.19.2x6.16)	VAV 2-3
77	Roof	Wood	296	0.034	0	0	X	R-30 Roof (R.30.2x12.16)	VAV 2-2
78	Wall	Wood	238	0.065	315	90	X	R-19 Wall (W.19.2x6.16)	VAV 2-2
79	Roof	Wood	740	0.034	0	0	X	R-30 Roof (R.30.2x12.16)	VAV 2-1
80	Roof	Wood	1,238	0.034	0	0	X	R-30 Roof (R 30.2x12.16)	VAV 1-2

FENESTRATION SURFACES

Site Assembled Glazing ☐ Check box if Building is >= 100,000 sqft of CFA and >= 10,000 sqft vertical glazing then NFRC Certification is required. Follow NFRC 100-SB Procedures and submit NFRC Label Certificate Form.

#	Type	Area	U-Fac.	Act. Azm.	SHGC	Glazing Type	Location / Comments
46	Window	117	1.260	90	0.80	Single Metal Clear Default	SFP 1-3
47	Window	157	0.570	270	0.42	PPG Solarbronze	SFP 1-1
48	Window	21	0.570	315	0.42	PPG Solarbronze	SFP 1-1
49	Window	45	0.570	315	0.42	PPG Solarbronze	SFP 1-1

EXTERIOR SHADING

#	Exterior Shade Type	SHGC	Window Hgt. Wd.	Overhang Len. Hgt. LExt. RExt.	Left Fin Dist. Len. Hgt.	Right Fin Dist. Len. Hgt.
46	None	0.76				
47	None	0.76				
48	None	0.76				
49	None	0.76				

Run Initiation Time: 09/13/01 11:12:32 Run Code: 1000404752

EnergyPro 3.1 By EnergySoft User Number 0000 Job Number 01287 Page 11 of 28

ENVELOPE COMPLIANCE SUMMARY — Performance ENV-1

PROJECT NAME: Saratoga Library — DATE: 9/13/2001

OPAQUE SURFACES

#	Surface Type	Framing Type	Area	U-Fac.	Act. Azm.	Tilt	Solar Gains Y/N	Form 3 Reference	Location / Comments
101	Roof	Wood	1,900	0.034	0	0	X	R-30 Roof (R.30 2x12.16)	SFP 1-3
102	Wall	Wood	161	0.065	180	90	X	R-19 Wall (W.19.2x6.16)	SFP 1-3
103	Wall	Wood	338	0.065	135	90	X	R-19 Wall (W.19.2x6.16)	SFP 1-3
104	Wall	Wood	108	0.065	225	90	X	R-19 Wall (W.19 2x6.16)	SFP 1-3
105	Wall	Wood	460	0.065	90	90	X	R-19 Wall (W.19 2x6.16)	SFP 1-3
106	Wall	Wood	108	0.065	45	90	X	R-19 Wall (W.19 2x6.16)	SFP 1-3
107	Roof	Wood	2,180	0.034	0	0	X	R-30 Roof (R.30.2x12.16)	SFP 1-2
108	Roof	Wood	1,080	0.034	0	0	X	R-30 Roof (R.30.2x12.16)	SFP 1-1
109	Wall	Wood	668	0.065	270	90	X	R-19 Wall (W.19 2x6.16)	SFP 1-1
110	Wall	Wood	302	0.065	315	90	X	R-19 Wall (W.19 2x6.16)	SFP 1-1

FENESTRATION SURFACES

Site Assembled Glazing ☐ Check box if Building is >= 100,000 sqft of CFA and >= 10,000 sqft vertical glazing then NFRC Certification is required. Follow NFRC 100-SB Procedures and submit NFRC Label Certificate Form.

#	Type	Area	U-Fac.	Act. Azm.	SHGC	Glazing Type	Location / Comments

EXTERIOR SHADING

#	Exterior Shade Type	SHGC	Window Hgt. Wd.	Overhang Len. Hgt. LExt. RExt.	Left Fin Dist. Len. Hgt.	Right Fin Dist. Len. Hgt.

Run Initiation Time: 09/13/01 11:12:32 Run Code: 1000404752

EnergyPro 3.1 By EnergySoft User Number 0000 Job Number 01287 Page 13 of 28

CERTIFICATE OF COMPLIANCE — Performance MECH-1

PROJECT NAME: Saratoga Library — DATE: 9/13/2001

SYSTEM FEATURES

SYSTEM NAME	AC-1			NOTE TO FIELD
TIME CONTROL	Programmable Switch			
SETBACK CONTROL	Heating Required			
ISOLATION ZONES	n/a			
HEAT PUMP THERMOSTAT?	n/a			
ELECTRIC HEAT?	n/a			
FAN CONTROL	Variable Speed			
VAV MINIMUM POSITION CONTROL?	Yes			
SIMULTANEOUS HEAT/COOL?	Yes			
HEATING SUPPLY RESET	Constant Temp			
COOLING SUPPLY RESET	OA Reset			
HEAT REJECTION CONTROL	n/a			
VENTILATION	Air Balance			
OUTDOOR DAMPER CONTROL	Auto			
ECONOMIZER TYPE	Fixed Temp (Integrated)			
DESIGN AIR CFM (MECH-3, COLUMN I)	16483 cfm			
HEATING EQUIPMENT TYPE	Hot Water			
HEATING EQUIPMENT EFFICIENCY	n/a			
COOLING EQUIPMENT TYPE	Packaged VAV			
COOLING EQUIPMENT EFFICIENCY	10.0 EER			
MAKE AND MODEL NUMBER	SXHF-C55			
HEATING DUCT LOCATION / R-VALUE	Ducts in Attic / 4.2			
COOLING DUCT LOCATION / R-VALUE	Ducts in Attic / 4.2			
PIPE/DUCT INSULATION PROTECTED?	Yes			
PIPE TYPE (SUPPLY, RETURN, ETC.)				
PIPE INSULATION REQUIRED?	Yes			
VERIFIED SEALED DUCTS IN CEILING/ROOF SPACE	No			

CODE TABLES. Enter code from table below into columns above.

HEAT PUMP THERMOSTAT? / ELECTRIC HEAT? / VAV MINIMUM POSITION CONTROL? / SIMULTANEOUS HEAT / COOL? / HEAT AND COOL SUPPLY RESET? / HIGH EFFICIENCY? / PIPE INSULATION REQUIRED? / PIPE/DUCT INSULATION PROTECTED? / SEALED DUCTS IN CEILING/ROOF SPACE? — Y: Yes, N: No

TIME CONTROL	SETBACK CTRL.	ISOLATION ZONES	FAN CONTROL
S: Prog. Switch O: Occupancy Sensor M: Manual Timer	H: Heating C: Cooling B: Both	Enter Number of Isolation Zones.	I: Inlet Vanes P: Variable Pitch V: VFD O: Other C: Curve

VENTILATION	OUTDOOR DAMPER	ECONOMIZER	O.A. CFM
B: Air Balance C. Outside Air Cert. M. Out. Air Measure D: Demand Control N: Natural	A: Auto G: Gravity	A: Air W: Water N: Not Required EC: Economizer Control See Section 144(e)3	Enter Outdoor Air CFM. Note: This shall be no less than Col. H on MECH-3.

NOTES TO FIELD - For Building Department Use Only

Run Initiation Time: 09/13/01 11:12:32 Run Code: 1000404752

EnergyPro 3.1 By EnergySoft User Number 0000 Job Number 01287 Page 15 of 28

MECHANICAL EQUIPMENT SUMMARY — Part 2 of 2 MECH-2

PROJECT NAME: Saratoga Library — DATE: 9/13/2001

ZONE TERMINAL SUMMARY

Zone Name	VAV Terminal Box: System Type	Qty.	Min. CFM Ratio	Reheat Coil Type	Reheat Coil DeltaT	Terminal Fan: CFM	BHP	Motor Eff.	Drive Eff.	Baseboard: Type	Output
VAV 3-8	VAV Box	1	30%	none	n/a	none				none	n/a
VAV 3-7	VAV Box	1	30%	none	n/a	none				none	n/a
VAV 3-6	VAV Box	1	30%	none	n/a	none				none	n/a
VAV 3-5	VAV Box	1	30%	none	n/a	none				none	n/a
VAV 3-4	VAV Box	1	30%	none	n/a	none				none	n/a
VAV 3-3	VAV Box	1	30%	none	n/a	none				none	n/a
VAV 3-2	VAV Box	1	30%	none	n/a	none				none	n/a
VAV 3-1	VAV Box	1	30%	none	n/a	none				none	n/a
SFP 3-12	VAV Box	1	30%	Hot Water	50	none				none	n/a
SFP 3-11	VAV Box	1	30%	Hot Water	50	none				none	n/a
SFP 3-10	VAV Box	1	30%	Hot Water	50	none				none	n/a
SFP 3-9	VAV Box	1	30%	Hot Water	50	none				none	n/a
SFP 3-8	VAV Box	1	30%	Hot Water	50	none				none	n/a
SFP 3-7	VAV Box	1	30%	Hot Water	50	none				none	n/a
SFP 3-6	VAV Box	1	30%	Hot Water	50	none				none	n/a
SFP 3-5	VAV Box	1	30%	Hot Water	50	none				none	n/a
SFP 3-4	VAV Box	1	30%	Hot Water	50	none				none	n/a
SFP 3-3	VAV Box	1	30%	Hot Water	50	none				none	n/a
SFP 3-2	VAV Box	1	30%	Hot Water	50	none				none	n/a
SFP 3-1	VAV Box	1	30%	Hot Water	50	none				none	n/a
SFP 2-7	VAV Box	1	30%	Hot Water	50	none				none	n/a
SFP 2-6	VAV Box	1	30%	Hot Water	50	none				none	n/a
SFP 2-5	VAV Box	1	30%	Hot Water	50	none				none	n/a
SFP 2-4	VAV Box	1	30%	Hot Water	50	none				none	n/a
SFP 2-3	VAV Box	1	30%	Hot Water	50	none				none	n/a
SFP 2-2	VAV Box	1	30%	Hot Water	50	none				none	n/a
SFP 2-1	VAV Box	1	30%	Hot Water	50	none				none	n/a
VAV 2-8	VAV Box	1	30%	none	n/a	none				none	n/a

EXHAUST FAN SUMMARY

Room Name	Qty.	CFM	BHP	Motor Eff.	Drive Eff.	Room Name	Qty.	CFM	BHP	Motor Eff.	Drive Eff.
SFP 3-12	1	1,000	0.33	77.0%	97.0%	SFP 3-9	1	1,100	0.33	77.0%	97.0%
SFP 3-11	1	720	0.25	77.0%	97.0%	SFP 3-8	1	1,200	0.33	77.0%	97.0%
SFP 3-10	1	1,450	0.75	77.0%	97.0%	SFP 3-7	1	1,450	0.75	77.0%	97.0%

Run Initiation Time: 09/13/01 11:12:32 Run Code: 1000404752

EnergyPro 3.1 By EnergySoft User Number 0000 Job Number 01287 Page 17 of 28

ENVELOPE COMPLIANCE SUMMARY — Performance ENV-1

PROJECT NAME: Saratoga Library — DATE: 9/13/2001

OPAQUE SURFACES

#	Surface Type	Framing Type	Area	U-Fac.	Act. Azm.	Tilt	Solar Gains Y/N	Form 3 Reference	Location / Comments
81	Wall	Wood	30	0.065	135	90	X	R-19 Wall (W.19.2x6.16)	VAV 1-2
82	Wall	Wood	280	0.065	315	90	X	R-19 Wall (W.19.2x6.16)	VAV 1-2
83	Wall	Wood	398	0.065	45	90	X	R-19 Wall (W.19.2x6.16)	VAV 1-2
84	Roof	Wood	1,098	0.034	0	0	X	R-30 Roof (R.30.2x12.16)	VAV 1-1
85	Wall	Wood	30	0.065	135	90	X	R-19 Wall (W.19.2x6.16)	VAV 1-1
86	Wall	Wood	252	0.065	315	90	X	R-19 Wall (W.19.2x6.16)	VAV 1-1
87	Wall	Wood	372	0.065	45	90	X	R-19 Wall (W.19.2x6.16)	VAV 1-1
88	Roof	Wood	2,358	0.034	0	0	X	R-30 Roof (R.30.2x12.16)	SFP 1-9
89	Roof	Wood	992	0.034	0	0	X	R-30 Roof (R.30.2x12.16)	SFP 1-8
90	Roof	Wood	1,009	0.034	0	0	X	R-30 Roof (R.30.2x12.16)	SFP 1-7
91	Wall	Wood	668	0.065	0	90	X	R-19 Wall (W.19.2x6.16)	SFP 1-7
92	Wall	Wood	274	0.065	315	90	X	R-19 Wall (W.19.2x6.16)	SFP 1-7
93	Roof	Wood	1,323	0.034	0	0	X	R-30 Roof (R.30 2x12.16)	SFP 1-6
94	Wall	Wood	432	0.065	225	90	X	R-19 Wall (W.19.2x6.16)	SFP 1-6
95	Wall	Wood	432	0.065	45	90	X	R-19 Wall (W.19.2x6.16)	SFP 1-6
96	Wall	Wood	400	0.065	135	90	X	R-19 Wall (W.19.2x6.16)	SFP 1-6
97	Wall	Wood	400	0.065	315	90	X	R-19 Wall (W.19.2x6.16)	SFP 1-6
98	Roof	Wood	792	0.034	0	0	X	R-30 Roof (R.30.2x12.16)	SFP 1-5
99	Wall	Wood	318	0.065	315	90	X	R-19 Wall (W.19.2x6.16)	SFP 1-5
100	Roof	Wood	1,134	0.034	0	0	X	R-30 Roof (R.30.2x12.16)	SFP 1-4

FENESTRATION SURFACES

Site Assembled Glazing ☐ Check box if Building is >= 100,000 sqft of CFA and >= 10,000 sqft vertical glazing then NFRC Certification is required. Follow NFRC 100-SB Procedures and submit NFRC Label Certificate Form.

#	Type	Area	U-Fac.	Act. Azm.	SHGC	Glazing Type	Location / Comments

EXTERIOR SHADING

#	Exterior Shade Type	SHGC	Window Hgt. Wd.	Overhang Len. Hgt. LExt. RExt.	Left Fin Dist. Len. Hgt.	Right Fin Dist. Len. Hgt.

Run Initiation Time: 09/13/01 11:12:32 Run Code: 1000404752

EnergyPro 3.1 By EnergySoft User Number 0000 Job Number 01287 Page 12 of 28

CERTIFICATE OF COMPLIANCE — Performance MECH-1

PROJECT NAME: Saratoga Library — DATE: 9/13/2001

SYSTEM FEATURES

SYSTEM NAME	Hot Water Boiler	AC-3	AC-2	NOTE TO FIELD
TIME CONTROL	n/a	Programmable Switch	Programmable Switch	
SETBACK CONTROL	n/a	Heating Required	Heating Required	
ISOLATION ZONES	n/a	n/a	n/a	
HEAT PUMP THERMOSTAT?	n/a	n/a	n/a	
ELECTRIC HEAT?	n/a	n/a	n/a	
FAN CONTROL	n/a	Variable Speed	Variable Speed	
VAV MINIMUM POSITION CONTROL?	n/a	Yes	Yes	
SIMULTANEOUS HEAT/COOL?	n/a	Yes	Yes	
HEATING SUPPLY RESET	n/a	Constant Temp	Constant Temp	
COOLING SUPPLY RESET	n/a	OA Reset	OA Reset	
HEAT REJECTION CONTROL	n/a	n/a	n/a	
VENTILATION	n/a	Air Balance	Air Balance	
OUTDOOR DAMPER CONTROL	n/a	Auto	Auto	
ECONOMIZER TYPE	n/a	Fixed Temp (Integrated)	Fixed Temp (Integrated)	
DESIGN AIR CFM (MECH-3, COLUMN I)	n/a	17728 cfm	16561 cfm	
HEATING EQUIPMENT TYPE	Gas Fired	Hot Water	Hot Water	
HEATING EQUIPMENT EFFICIENCY	81%	n/a	n/a	
COOLING EQUIPMENT TYPE	LAARS PH0775M	Packaged VAV	Packaged VAV	
COOLING EQUIPMENT EFFICIENCY	n/a	8.8 EER	9.6 EER	
MAKE AND MODEL NUMBER	n/a	SXHF-C55-2	SXHF-C60	
HEATING DUCT LOCATION / R-VALUE	n/a / n/a	Ducts in Attic / 4.2	Ducts in Attic / 4.2	
COOLING DUCT LOCATION / R-VALUE	n/a / n/a	Ducts in Attic / 4.2	Ducts in Attic / 4.2	
PIPE/DUCT INSULATION PROTECTED?	Yes	Yes	Yes	
PIPE TYPE (SUPPLY, RETURN, ETC.)	Supply & Return HW			
PIPE INSULATION REQUIRED?	Yes	Yes	Yes	
VERIFIED SEALED DUCTS IN CEILING/ROOF SPACE	n/a	No	No	

CODE TABLES. Enter code from table below into columns above.

HEAT PUMP THERMOSTAT? / ELECTRIC HEAT? / VAV MINIMUM POSITION CONTROL? / SIMULTANEOUS HEAT / COOL? / HEAT AND COOL SUPPLY RESET? / HIGH EFFICIENCY? / PIPE INSULATION REQUIRED? / PIPE/DUCT INSULATION PROTECTED? / SEALED DUCTS IN CEILING/ROOF SPACE? — Y: Yes, N: No

TIME CONTROL	SETBACK CTRL.	ISOLATION ZONES	FAN CONTROL
S: Prog. Switch O: Occupancy Sensor M: Manual Timer	H: Heating C: Cooling B: Both	Enter Number of Isolation Zones.	I: Inlet Vanes P: Variable Pitch V: VFD O: Other C: Curve

VENTILATION	OUTDOOR DAMPER	ECONOMIZER	O.A. CFM
B: Air Balance C. Outside Air Cert. M. Out. Air Measure D: Demand Control N: Natural	A: Auto G: Gravity	A: Air W: Water N: Not Required EC: Economizer Control See Section 144(e)3	Enter Outdoor Air CFM. Note: This shall be no less than Col. H on MECH-3.

NOTES TO FIELD - For Building Department Use Only

Run Initiation Time: 09/13/01 11:12:32 Run Code: 1000404752

EnergyPro 3.1 By EnergySoft User Number 0000 Job Number 01287 Page 14 of 28

MECHANICAL EQUIPMENT SUMMARY — Part 1 of 2 MECH-2

PROJECT NAME: Saratoga Library — DATE: 9/13/2001

CHILLER AND TOWER SUMMARY

Equipment Name	Equipment Type	Qty.	Efficiency	Tons	Pumps: Tot. Qty	GPM	BHP	Motor Eff.	Drive Eff.	Pump Control
Hot Water Pumps					2	60	1.80	84.0%	97.0%	One-Speed

DHW / BOILER SUMMARY

System Name	System Type	Distribution Type	Qty	Rated Input	Vol. (Gals.)	Energy Factor or Recovery Efficiency	Standby Loss or Pilot	Tank Insul. Ext. R-Val.
LAARS PH0775M	Instant Gas	Hydronic Heating	2	775,000	0	0.81	0	n/a

CENTRAL SYSTEM RATINGS

System Name	System Type	Qty.	Heating: Output	Aux. kW	Eff.	Cooling: Output	Sensible	Efficiency	Economizer Type
SXHF-C55-2	Packaged VAV	1	0	0.0	n/a	698,560	597,260	8.8 EER	Fixed Temp (Integrated)
SXHF-C60	Packaged VAV	1	0	0.0	n/a	615,380	522,950	9.6 EER	Fixed Temp (Integrated)
SXHF-C55	Packaged VAV	1	0	0.0	n/a	509,620	460,270	10.0 EER	Fixed Temp (Integrated)

CENTRAL SYSTEM FAN SUMMARY

System Name	Fan Type	Motor Location	Supply Fan: CFM	BHP	Motor Eff.	Drive Eff.	Return Fan: CFM	BHP	Motor Eff.	Drive Eff.
SXHF-C55-2	Variable Speed	Draw-Through	20,000	25.80	91.7%	100.0%	18,000	7.93	88.5%	97.0%
SXHF-C60	Variable Speed	Draw-Through	18,000	26.62	91.7%	100.0%	16,500	7.80	88.5%	97.0%
SXHF-C55	Variable Speed	Draw-Through	16,000	18.53	91.0%	100.0%	15,060	4.84	86.5%	97.0%

Run Initiation Time: 09/13/01 11:12:32 Run Code: 1000404752

EnergyPro 3.1 By EnergySoft User Number 0000 Job Number 01287 Page 16 of 28

MECHANICAL EQUIPMENT SUMMARY — Part 2 of 2 MECH-2

PROJECT NAME: Saratoga Library — DATE: 9/13/2001

ZONE TERMINAL SUMMARY

Zone Name	VAV Terminal Box: System Type	Qty.	Min. CFM Ratio	Reheat Coil Type	Reheat Coil DeltaT	Terminal Fan: CFM	BHP	Motor Eff.	Drive Eff.	Baseboard: Type	Output
VAV 2-7	VAV Box	1	30%	none	n/a	none				none	n/a
VAV 2-6	VAV Box	1	30%	Hot Water	50	none				none	n/a
VAV 2-5	VAV Box	1	30%	none	n/a	none				none	n/a
VAV 2-4	VAV Box	1	30%	Hot Water	50	none				none	n/a
VAV 2-3	VAV Box	1	30%	Hot Water	50	none				none	n/a
VAV 2-2	VAV Box	1	30%	Hot Water	50	none				none	n/a
VAV 2-1	VAV Box	1	30%	none	n/a	none				none	n/a
VAV 1-2	VAV Box	1	30%	Hot Water	50	none				none	n/a
VAV 1-1	VAV Box	1	30%	Hot Water	50	none				none	n/a
SFP 1-9	VAV Box	1	30%	Hot Water	50	none				none	n/a
SFP 1-8	VAV Box	1	30%	none	n/a	none				none	n/a
SFP 1-7	VAV Box	1	30%	Hot Water	50	none				none	n/a
SFP 1-6	VAV Box	1	30%	Hot Water	50	none				none	n/a
SFP 1-5	VAV Box	1	30%	Hot Water	50	none				none	n/a
SFP 1-4	VAV Box	1	30%	Hot Water	50	none				none	n/a
SFP 1-3	VAV Box	1	30%	Hot Water	50	none				none	n/a
SFP 1-2	VAV Box	1	30%	Hot Water	50	none				none	n/a
SFP 1-1	VAV Box	1	30%	Hot Water	50	none				none	n/a

EXHAUST FAN SUMMARY

Room Name	Qty.	CFM	BHP	Motor Eff.	Drive Eff.	Room Name	Qty.	CFM	BHP	Motor Eff.	Drive Eff.
SFP 3-6	1	1,900	1.00	82.5%	97.0%	SFP 3-3	1	1,500	0.75	77.0%	97.0%
SFP 3-5	1	2,000	1.00	82.5%	97.0%	SFP 3-2	1	1,500	0.75	77.0%	97.0%
SFP 3-4	1	1,800	0.75	77.0%	97.0%	SFP 3-1	1	1,500	0.75	77.0%	97.0%

Run Initiation Time: 09/13/01 11:12:32 Run Code: 1000404752

EnergyPro 3.1 By EnergySoft User Number 0000 Job Number 01287 Page 18 of 28

10/25/01 9:07:50 AM F:\C_3000\3024.00 SARATOGA LIBRARY\DRAWINGS\3024M52.DWG

FIELD PAOLI

Architecture
1045 Sansome St.
Suite 206
San Francisco
California, 94111
Tel. 415. 788. 6606
Fax 415. 788. 6650

SARATOGA LIBRARY

SANTA CLARA COUNTY LIBRARY

13650 Saratoga Avenue
Saratoga, California 95070

MECHANICAL DESIGN STUDIO inc
3330 Clayton Rd. Suite B
Concord California 94519-2838
tel 925. 680 6858
fax 925. 680 4348
www.mds-sf.com
PROJECT # 3024.00

LICENSED ARCHITECT — NO. C 13808 — REN. — STATE OF CALIFORNIA

DATE OCTOBER 28, 2001

REVISIONS

CONSTRUCTION DOCUMENTS
BID SET

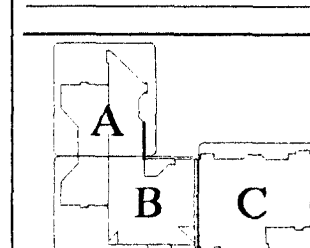

TITLE 24 DOCUMENTATION

SCALE NONE
DRAWN BY JLW/LK
CHECKED BY DA
JOB NO. 0101

PHASE 2

SHEET NO. **M5.2**

All drawings and written material appearing herein constitute the original and unpublished work of the architect and the same may not be duplicated, used, or disclosed without the written consent of the architect ©Field Paoli

MECHANICAL EQUIPMENT SUMMARY — Part 2 of 2 — MECH-2

PROJECT NAME: Saratoga Library | DATE: 9/13/2001

ZONE TERMINAL SUMMARY

Zone Name	VAV TERMINAL BOX System Type	Qty.	Min. CFM Ratio	Reheat Coil Type	Reheat Coil DeltaT	TERMINAL FAN CFM	BHP	Motor Eff.	Drive Eff.	BASEBOARD Type	Output

EXHAUST FAN SUMMARY

EXHAUST FAN Room Name	Qty.	CFM	BHP	Motor Eff.	Drive Eff.	EXHAUST FAN Room Name	Qty.	CFM	BHP	Motor Eff.	Drive Eff.
SFP 2-7	1	2,230	1.00	82.5%	97.0%	SFP 2-4	1	2,800	1.00	82.5%	97.0%
SFP 2-6	1	3,000	1.00	82.5%	97.0%	SFP 2-3	1	2,800	1.00	82.5%	97.0%
SFP 2-5	1	2,320	1.00	82.5%	97.0%	SFP 2-2	1	1,560	0.75	77.0%	97.0%

Run Initiation Time: 09/13/01 11:12:32 Run Code: 1000404752

EnergyPro 3.1 By EnergySoft User Number: 0000 Job Number: 01267 Page 19 of 28

MECHANICAL EQUIPMENT SUMMARY — Part 2 of 2 — MECH-2

PROJECT NAME: Saratoga Library | DATE: 9/13/2001

ZONE TERMINAL SUMMARY

Zone Name	VAV TERMINAL BOX System Type	Qty.	Min. CFM Ratio	Reheat Coil Type	Reheat Coil DeltaT	TERMINAL FAN CFM	BHP	Motor Eff.	Drive Eff.	BASEBOARD Type	Output

EXHAUST FAN SUMMARY

EXHAUST FAN Room Name	Qty.	CFM	BHP	Motor Eff.	Drive Eff.	EXHAUST FAN Room Name	Qty.	CFM	BHP	Motor Eff.	Drive Eff.
SFP 1-4	1	1,400	0.33	77.0%	97.0%	SFP 1-1	1	1,040	0.75	77.0%	97.0%
SFP 1-3	1	2,100	1.00	82.0%	97.0%						
SFP 1-2	1	1,910	0.75	77.0%	97.0%						

Run Initiation Time: 09/13/01 11:12:32 Run Code: 1000404752

EnergyPro 3.1 By EnergySoft User Number: 0000 Job Number: 01267 Page 21 of 28

MECHANICAL VENTILATION — MECH-3

PROJECT NAME: Saratoga Library | DATE: 9/13/2001

MECHANICAL VENTILATION

A ZONE/SYSTEM	B AREA BASIS COND. AREA (SF)	C CFM PER SF	D MIN. CFM (B x C)	E OCCUPANCY BASIS NO. OF PEOPLE	F CFM PER PERSON	G MIN. CFM (E x F)	H REQ'D O.A. (MAX OF D OR G)	I DESIGN OUTDOOR AIR CFM	J VAV MIN. RATIO	K TRANSFER AIR
VAV 2-8	936	0.15	140				140	140	30%	
VAV 2-7	744	0.15	112				112	112	30%	
VAV 2-6	540	0.15	81				81	81	30%	
VAV 2-5	1,183	0.15	177				177	177	30%	
VAV 2-4	957	0.15	144				144	144	30%	
VAV 2-3	990	0.15	148				148	148	30%	
VAV 2-2	282	0.15	42				42	42	30%	
VAV 2-1	705	0.15	106				106	106	30%	
AC-2						Total	2,251	16,561		
VAV 1-2	1,176	0.15	177				177	177	30%	
VAV 1-1	1,048	0.15	157				157	157	30%	
SFP 1-9	2,246	0.15	337				337	1,700	30%	
SFP 1-8	948	0.15	142				142	1,200	30%	
SFP 1-7	961	0.15	144				144	1,000	30%	
SFP 1-6	1,260	0.15	189				189	1,740	30%	
SFP 1-5	792	0.15	119				119	2,440	30%	
SFP 1-4	1,080	0.15	162				162	1,400	30%	
SFP 1-3	1,810	0.15	272				272	2,100	30%	
SFP 1-2	2,077	0.15	312				312	1,910	30%	
SFP 1-1	1,028	0.15	154				154	1,040	30%	
AC-1						Total	2,163	16,463		

C Minimum Ventilation Rate per Section 121, Table 1-F.
E Based on Expected Number of Occupants or at least 50% of Chapter 10 1997 UBC Occupant Density
I Must be greater than or equal to H, or use Transfer Air. Design Outdoor Air includes ventilation from Supply Air System & Room Exhaust Fans.
K Must be greater than or equal to (H minus I), and, for VAV, greater than or equal to (H-J).

EnergyPro 3.1 By EnergySoft User Number: 0000 Job Number: 01267 Page 23 of 28

MECHANICAL MANDATORY MEASURES — Part 1 of 2 — MECH-MM

PROJECT NAME: Saratoga Library | DATE: 9/13/2001

DESCRIPTION	Designer	Enforcement
Equipment and Systems Efficiencies		
[X] § 111 Any appliance for which there is a California standard established in the Appliance Efficiency Regulations will comply with the applicable standard.		
[X] § 115(a) Fan type central furnaces shall not have a pilot light.		
[X] § 123 Piping, except that conveying fluids at temperatures between 60 and 105 degrees Fahrenheit, or within HVAC equipment, shall be insulated in accordance with Standards Section 123.		
[X] § 124 Air handling duct systems shall be installed and insulated in compliance with Sections 601, 603 and 604 of the Uniform Mechanical Code.		
Controls		
§ 122(a) Each space conditioning system shall be installed with one of the following:		
[X] § 122(e)1A Each space conditioning system serving building types such as office and manufacturing facilities (and all others not explicitly exempt from the requirements of Section 112 (d)) shall be installed with an automatic time switch with an accessible manual override that allows operation of the system during off-hours for up to 4 hours. The time switch shall be capable of programming different schedules for weekdays and weekends, incorporate an automatic holiday "shut-off" feature that turns off all loads for at least 24 hours, then resume the normally scheduled operation; and has program backup capabilities that prevent the loss of the device's program and time setting for at least 10 hours if power is interrupted; or		
[ ] § 122(e)1B An occupancy sensor to control the operating period of the system; or		
[ ] § 122(e)1C A 4-hour timer that can be manually operated to control the operating period of the system.		
[X] § 122(e)2 Each space conditioning system shall be installed with controls that temporarily restart and temporarily operate the system as required to maintain a setback heating and/or a setup cooling thermostat setpoint.		
[ ] § 122(g) Each space conditioning system serving multiple zones with a combined conditioned floor area more than 25,000 square feet shall be provided with isolation zones. Each zone: shall not exceed 25,000 square feet, shall be provided with isolation devices, such as valves or dampers, that allow the supply of heating or cooling to be setback or shut off independently of other isolation areas; and shall be controlled by a time control device as described above.		
[X] § 122(a5A) Each space conditioning system shall be controlled by an individual thermostat that responds to temperature within the zone. Where used to control heating, the control shall be adjustable down to 55 degrees F or lower. For cooling, the control shall be adjustable up to 85 degrees F or higher. Where used for both heating and cooling, the control shall be capable of providing a deadband of at least 5 degrees F within which the supply of heating and cooling is shut off or reduced to a minimum.		
[X] § 122(c) Thermostats shall have numeric setpoints in degrees Fahrenheit (F) and adjustable setpoint stops accessible only to authorized personnel.		
[ ] § 112(b) Heat pumps shall be installed with controls to prevent electric resistance supplementary heater operation when the heating load can be met by the heat pump alone.		

EnergyPro 3.1 By EnergySoft User Number: 0000 Job Number: 01267 Page 25 of 28

MECHANICAL EQUIPMENT SUMMARY — Part 2 of 2 — MECH-2

PROJECT NAME: Saratoga Library | DATE: 9/13/2001

ZONE TERMINAL SUMMARY

Zone Name	VAV TERMINAL BOX System Type	Qty.	Min. CFM Ratio	Reheat Coil Type	Reheat Coil DeltaT	TERMINAL FAN CFM	BHP	Motor Eff.	Drive Eff.	BASEBOARD Type	Output

EXHAUST FAN SUMMARY

EXHAUST FAN Room Name	Qty.	CFM	BHP	Motor Eff.	Drive Eff.	EXHAUST FAN Room Name	Qty.	CFM	BHP	Motor Eff.	Drive Eff.
SFP 2-1	1	900	0.25	77.0%	97.0%	SFP 1-7	1	1,000	0.25	77.0%	97.0%
SFP 1-9	1	1,700	0.75	77.0%	97.0%	SFP 1-6	1	1,740	0.75	77.0%	97.0%
SFP 1-8	1	1,300	0.33	77.0%	97.0%	SFP 1-5	1	2,440	1.00	82.5%	97.0%

Run Initiation Time: 09/13/01 11:12:32 Run Code: 1000404752

EnergyPro 3.1 By EnergySoft User Number: 0000 Job Number: 01267 Page 20 of 28

MECHANICAL VENTILATION — MECH-3

PROJECT NAME: Saratoga Library | DATE: 9/13/2001

MECHANICAL VENTILATION

A ZONE/SYSTEM	B AREA BASIS COND. AREA (SF)	C CFM PER SF	D MIN. CFM (B x C)	E OCCUPANCY BASIS NO. OF PEOPLE	F CFM PER PERSON	G MIN. CFM (E x F)	H REQ'D O.A. (MAX OF D OR G)	I DESIGN OUTDOOR AIR CFM	J VAV MIN. RATIO	K TRANSFER AIR
VAV 3-8	112	0.15	17				17	17	30%	
VAV 3-7	1,118	0.15	168				168	168	30%	
VAV 3-6	1,560	0.15	234				234	234	30%	
VAV 3-5	120	0.15	18				18	18	30%	
VAV 3-4	86	0.15	13				13	13	30%	
VAV 3-3	726	0.15	109				109	109	30%	
VAV 3-2	160	0.15	24				24	24	30%	
VAV 3-1	173	0.15	26				26	26	30%	
SFP 3-12	854	0.15	128				128	1,000	30%	
SFP 3-11	698	0.15	105				105	720	30%	
SFP 3-10	1,496	0.15	224				224	1,450	30%	
SFP 3-9	820	0.15	123				123	1,100	30%	
SFP 3-8	1,498	0.15	225				225	1,200	30%	
SFP 3-7	2,092	0.15	314				314	1,450	30%	
SFP 3-6	1,071	0.15	161				161	1,500	30%	
SFP 3-5	1,386	0.15	208				208	2,000	30%	
SFP 3-4	1,008	0.15	151				151	1,500	30%	
SFP 3-3	1,880	0.15	282				282	1,500	30%	
SFP 3-2	1,186	0.15	178				178	1,500	30%	
SFP 3-1	792	0.15	119				119	1,500	30%	
AC-3						Total	2,825	17,728		
SFP 2-7	1,632	0.15	245				245	2,230	30%	
SFP 2-6	1,020	0.15	153				153	3,000	30%	
SFP 2-5	1,406	0.15	211				211	2,320	30%	
SFP 2-4	1,292	0.15	194				194	2,800	30%	
SFP 2-3	1,708	0.15	256				256	2,800	30%	
SFP 2-2	808	0.15	121				121	1,560	30%	
SFP 2-1	808	0.15	121				121	900	30%	

C Minimum Ventilation Rate per Section 121, Table 1-F.
E Based on Expected Number of Occupants or at least 50% of Chapter 10 1997 UBC Occupant Density.
I Must be greater than or equal to H, or use Transfer Air. Design Outdoor Air includes ventilation from Supply Air System & Room Exhaust Fans.
K Must be greater than or equal to (H minus I), and, for VAV, greater than or equal to (H-J).

EnergyPro 3.1 By EnergySoft User Number: 0000 Job Number: 01267 Page 22 of 28

ENVELOPE MANDATORY MEASURES — ENV-MM

PROJECT NAME: Saratoga Library | DATE: 9/13/2001

DESCRIPTION	Designer	Enforcement
[X] § 118(a) Installed Insulating Material shall have been certified by the manufacturer to comply with the California Quality Standards for Insulating material, Title 20, Chapter 4, Article 3.		
[X] § 118(c) All Insulating Materials shall be installed in compliance with the flame spread rating and smoke density requirements of Sections 2002 and 707 of Title 24, Part 2.		
[X] § 117(a) All Exterior Joints and openings in the building that are observable sources of air leakage shall be caulked, gasketed, weatherstripped or otherwise sealed.		
[X] § 116(b) Site Constructed Doors, Windows and Skylights shall be caulked between the unit and the building, and shall be weatherstripped (except for unframed glass doors and fire doors).		
[X] § 116(a)1 Manufactured Doors and Windows installed shall have air infiltration rates not exceeding those shown in Table Number 1-E, of the Standards. Manufactured fenestration products must be labeled for U-value according to NFRC procedures.		
[X] § 118(e) Demising Walls in Nonresidential Buildings: The opaque portions of framed demising walls in nonresidential buildings shall have insulation with an installed R-value of no less than R-11 between framing members.		

EnergyPro 3.1 By EnergySoft User Number: 0000 Job Number: 01267 Page 24 of 28

MECHANICAL MANDATORY MEASURES — Part 2 of 2 — MECH-MM

PROJECT NAME: Saratoga Library | DATE: 9/13/2001

Description	Designer	Enforcement
Ventilation		
[X] § 121(a) Controls shall be provided to allow outside air dampers or devices to be operated at the ventilation rates as specified on these plans.		
[ ] § 122(f) Gravity or automatic dampers interlocked and closed on fan shutdown shall be provided on the outside air intakes and discharges of all space conditioning and exhaust systems.		
[ ] § 122(f) All gravity ventilating systems shall be provided with automatic or readily accessible manually operated dampers in all openings to the outside, except for combustion air openings.		
[ ] § 121(f)1 Air Balancing: The system shall be balanced in accordance with the National Environmental Balancing Bureau (NEBB) Procedural Standards (1983), or Associated Air Balance Council (AABC) National Standards (1989); or		
[X] § 121(f)2 Outside Air Certification: The system shall provide the minimum outside air as shown on the mechanical drawings, and shall be measured and certified by the installing licensed C-20 mechanical contractor and certified by (1) the design mechanical engineer, (2) the installing licensed C-20 mechanical contractor, or (3) the person with overall responsibility for the design of the ventilation system; or		
[ ] § 121(f)3 Outside Air Measurement: The system shall be equipped with a calibrated local or remote device capable of monitoring the quantity of outside air on a continuous basis and displaying that quantity on a readily accessible display device; or		
[ ] § 121(f)4 Another method approved by the Commission.		
Service Water Heating Systems		
[X] § 113(b)2 If a circulating hot water system is installed, it shall have a control capable of automatically turning off the circulating pump(s) when hot water is not required.		
[ ] § 113(b)3B Lavatories in restrooms of public facilities shall be equipped with controls to limit the outlet temperature to 110 degrees F.		
[ ] § 113(b)3C Lavatories in restrooms of public facilities shall be equipped with one of the following:		
Outlet devices that limit the flow of hot water to a maximum of 0.5 gallons per minute.		
Foot actuated control valves, and outlet devices that limit the flow of hot water to a maximum of 0.75 gallons per minute.		
Proximity sensor actuated control valves, and outlet devices that limit the flow of hot water to a maximum of 0.75 gallons per minute.		
Self-closing valves, and outlet devices that limit the flow of hot water to a maximum of 2.5 gallons per minute, and 0.25 gallons/cycle (circulating system).		
Self-closing valves, and outlet devices that limit the flow of hot water to a maximum of 2.5 gallons per minute, and 0.50 gallons/cycle (non-circulating system).		
Self-closing valves, and outlet devices that limit the flow of hot water to a maximum of 2.5 gallons per minute, and 0.75 gallons/cycle (foot switches and proximity sensor controls).		

EnergyPro 3.1 By EnergySoft User Number: 0000 Job Number: 01267 Page 26 of 28

FIELD PAOLI

Architecture
1045 Sansome St.
Suite 206
San Francisco
California, 94111
Tel. 415. 788. 6606
Fax 415. 788. 6650

SARATOGA LIBRARY

SANTA CLARA COUNTY LIBRARY

13650 Saratoga Avenue
Saratoga, California 95070

MECHANICAL DESIGN STUDIO inc
2320 Clayton Rd. Suite B
Concord California 94519-2638
tel 925. 680 5008
fax 925. 680 4348
www.mds-sf.com
PROJECT # 3024.00

DATE: OCTOBER 26, 2001

REVISIONS

CONSTRUCTION DOCUMENTS
BID SET

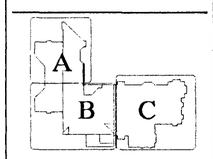

TITLE 24 DOCUMENTATION

SCALE: NONE
DRAWN BY: JLW/JK
CHECKED BY: DA
JOB NO.: 0101

PHASE 2

SHEET NO. **M5.3**

All drawings and written material appearing herein constitute the original and unpublished work of the architect and the same may not be duplicated, used, or disclosed without the written consent of the architect ©Field Paoli

10/25/01 9:06:42 AM F:\C_3000\3024.00 SARATOGA LIBRARY\DRAWINGS\3024M3.DWG

PLUMBING FIXTURES AND CONNECTION SCHEDULE

CODE	DESCRIPTION	WASTE	TRAP	VENT	CW	HW	MANUFACTURER AND MODEL NO.	
WC-1	WATER CLOSET	4"	INTEGRAL	2"	1-1/2"	-	AMERICAN STANDARD 2257.103 "AFWALL" WALL MOUNTED ELONGATED, SENSOR OPERATED FLUSH VALVE SLOAN ROYAL 111, ES-S, 1.6 GPF, SEAT OLSONITE # 95.	
WC-2	WATER CLOSET (ADA COMPLIANT)	4"	INTEGRAL	2"	1-1/2"	-	AMERICAN STANDARD 2257.103 "AFWALL" WALL MOUNTED ELONGATED, SENSOR OPERATED FLUSH VALVE SLOAN ROYAL 111, ES-S, 1.6 GPF, SEAT OLSONITE # 95, INSTALLED AT HANDICAPPED HEIGHT.	1
WC-3	WATER CLOSET (ADA COMPLIANT)	4"	INTEGRAL	2"	1-1/2"	-	AMERICAN STANDARD 2305.100 "MADERA" ADA EL 1.6", ELONGATED, SENSOR OPERATED FLUSH VALVE SLOAN ROYAL 111, ES-S, 1.6 GPF, SEAT OLSONITE # 95.	1
LAV-1	LAVATORY (ADA COMPLIANT)	2"	1-1/4"X1-1/4"	1-1/2"	1/2"	1/2" △1	AMERICAN STANDARD 0356.012 "LUCERNE", WALL HUNG, SENSOR OPERATED FAUCET SLOAN EFF-600, GRID DRAIN.	2
LAV-2	LAVATORY (ADA COMPLIANT)	2"	1-1/4"X1-1/4"	1-1/2"	1/2"	1/2"	AMERICAN STANDARD 0475.020 "AQUALYN" COUNTERTOP SENSOR OPERATED FAUCET SLOAN EFF-600, GRID DRAIN.	2
UR-1	URINAL	2"	INTEGRAL	2"	1"	-	AMERICAN STANDARD 6501.010 "WASHBROOK", SENSOR OPERATED FLUSH VALVE SLOAN ROYAL 186-1, ED-S 1.0 GPF.	
UR-2	URINAL (ADA COMPLIANT)	2"	INTEGRAL	2"	1"	-	SAME AS UR-1 INSTALLED AT HANDICAPPED ACCESSIBLE HEIGHT.	
EWC-1	ELECTRIC WATER COOLER (ADA COMPLIANT)	2"	1-1/4"X1-1/4"	1-1/2"	1/2"	-	HAWS DUAL HEIGHT, HWCFB-2HS, PUSH BUTTON, 1/5 HP STAINLESS STEEL FINISH.	
SS-1	SERVICE SINK	3"	3"	2"	3/4"	3/4"	FLORESTONE MOP RECEPTOR, MODEL B2, TERRAZO, FAUCET LK-401, SPOUT WITH VACUUM BREAKER, PAIL HOOK, WALL BRACE, LK-402 HOSE, LK-403 MOP HOLDER, LK-404 HOSE HANGER.	
SK-1	SINK (ADA COMPLIANT)	2"	1-1/2"X1-1/2"	1-1/2"	1/2"	1/2"	ELKAY "LUSTERTONE" LRAD 2219, SINGLE BOWL, STAINLESS STEEL, COUNTERTOP, FAUCET LK-232-S, LKAD-35 BASKET STRAINER.	
SK-2	SINK (ADA COMPLIANT)	2"	1-1/2"X1-1/2"	1-1/2"	1/2"	1/2"	ELKAY "LUSTERTONE" LRAD 2219, STAINLESS STEEL, FAUCET LK-232-S, GARBAGE DISPOSER IN-SINK-ERATOR 333/SS, 1/2HP.	
SK-3	SINK (ADA COMPLIANT)	2"	1-1/2"X1-1/2"	1-1/2"	3/4"	3/4"	ELKAY "LUSTERTONE" LRAD 2521 SINGLE BOWL STAINLESS STEEL, COUNTERTOP, FAUCET LK-232-S, GARBAGE DISPOSER IN-SINK-ERATOR 333/SS, 1/2HP, 1/2" CW VALVED CONNECTION FOR ICE MAKER, 1/2" HW VALVED CONNECTION TO THE DISHWASHER. CONNECT DISHWASHER DISCHARGE TO AIR GAP FITTIN GON SINK LEDGE.	
△1 SK-4	SINK (ADA COMPLIANT)	2"	1-1/2"X1-1/2"	1-1/2"	3/4"	3/4"	ELKAY "LUSTERTONE" LRAD 2521, SINGLE BOWL STAINLESS STEEL, COUNTERTOP, FAUCET LK-232-S, GARBAGE DISPOSER IN-SINK-ERATOR 333/SS, 1/2HP, 1/2" CW VALVED CONNECTION FOR ICE MAKER.	
HB-1	HOSE BIBB	-	-	-	3/4"	-	CHICAGO FAUCET NO. 77, ROUGH BRASS, VACUUM BREAKER.	
HB-2	HOSE BIBB	-	-	-	3/4"	-	ZURN Z-1350 NARROW WALL HYDRANT, STAINLESS STEEL BOX, VACUUM BREAKER.	

1 INSTALL FLUSH VALVE ON WIDE SIDE OF STALL.
2 PROVIDE PROTECTIVE COVERS FOR TRAPS AND SUPPLIES AS SPECIFIED.

DRAINS AND CLEANOUT SCHEDULE

CODE	FLOOR FINISH	ZURN FIG. NUMBER	CONN.	TOP GR. MATERIAL	GRATE SIZE	REMARKS
FD-1	1	Z-415	2"	NICKEL BRONZE	6"ø	WITH TRAP PRIMER CONNECTION
FD-2	1	Z-415	2"	NICKEL BRONZE	6"ø	WITH TRAP PRIMER CONNECTION, FUNNEL
RD-1	-	Z-121	3"/4"	DURA-COATED CAST IRON DOME	12"ø	
OD-1	-	Z-121	3"/4"	DURA-COATED W/ CAST IRON DOME	12"ø	WITH 2" HIGH DAM
RC-1	-	Z-122	2"	DURA-COATED W/ INTERNAL DOME	12"ø	ROOF RECEPTOR
WCO	-	Z-1468	2"/4"	STAINLESS STEEL COVER	5"/7"	NICKEL BRONZE PLUG
FCO	1	Z-1400	4"	NICKEL BRONZE	6"ø	
GCO	-	Z-1474	4"	DURESIST COVER	9"ø	WITH INTERNAL CLEANOUT

NOTE(S): 1 REFER TO ARCHITECTURAL DRAWINGS FOR FLOOR FINISHES.

PLUMBING EQUIPMENT SCHEDULE

CODE	DESCRIPTION	REMARKS	REMARKS
EWH 1	ELECTRIC TANK TYPE WATER HEATER, A.O. SMITH DSE-40, 40 GALLONS TANK, 9 KW, 208V, 1ø, 60 HZ.	LOCATION: WATER HEATER RM. OPER. WEIGHT: 550 LBS.	
CP 1	DOMESTIC HOT WATER CIRCULATION PUMP, SERIES PR, BELL & GOSSETT, 5GPM, 18 FT. OF HEAD, 1/6 HP, 115V, 1 PH.	LOCATION: WATER HEATER RM. OPER. WEIGHT: N/A	

GENERAL NOTES

1. COORDINATE WITH PHASE 1 UNDERSLAB PLUMBING WORK.
2. THE INTENT OF THESE DRAWINGS AND SPECIFICATIONS IS THAT THE CONSTRUCTION IS TO BE IN ACCORDANCE WITH TITLE 24, CALIFORNIA CODE OF REGULATION.
3. THE DRAWINGS ARE DIAGRAMMATIC. THIS CONTRACTOR SHALL BE RESPONSIBLE FOR FIELD COORDINATION WITH OTHER TRADES. BEFORE SUBMITTING THE BID, CONTRACTOR SHALL REVIEW THE ARCHITECTURAL, STRUCTURAL AND ELECTRICAL DRAWINGS AND DETERMINE ALL REQUIREMENTS TO PROVIDE A PLUMBING AND FIRE PROTECTION SYSTEM AS DESCRIBED ON THE DRAWINGS.

LEGEND AND ABBREVIATIONS

SYMBOL	ABBR	DESCRIPTION
WH 1		EQUIPMENT NUMBER
	SW	SANITARY SOIL OR WASTE PIPING
	SW	SANITARY SOIL OR WASTE PIPING BELOW SLAB
	V	VENT PIPING
	CW	DOMESTIC COLD WATER PIPING
	HW	DOMESTIC HOT WATER PIPING (120°F)
	HWR	DOMESTIC HOT WATER RETURN PIPING
	G	NATURAL GAS PIPING
	SP	SPRINKLER PIPING
	F	FIRE WATER PIPING
	CD	CONDENSATE DRAIN
	NPW	NON-POTABLE WATER PIPING
	RWL	RAINWATER LEADER PIPING
	(E)	EXISTING PIPING
		SLOPE DOWN
	HB	HOSE BIBB
	FCO	FLOOR CLEANOUT
	WCO	WALL CLEANOUT
	TPRV	TEMPERATURE & PRESSURE RELIEF VALVE
	PRV	PRESSURE REDUCING VALVE
	SV	FLOW BALANCING VALVE
	FD	FLOOR DRAIN
	FS	FLOOR SINK
		LINE CONTINUED
	GV	GATE VALVE
	GC	GAS COCK
	CV	CHECK VALVE
	AFF	ABOVE FINISHED FLOOR
	AP	ACCESS PANEL
	(E)	EXISTING
	FFE	FINISHED FLOOR ELEVATION
	FU	FIXTURE UNITS
	GCO	GRADE CLEANOUT
	IW	INDIRECT WASTE
	OD	OVERFLOW ROOF DRAIN
	RD	ROOF DRAIN
	RPBP	REDUCED PRESSURE BACKFLOW PREVENTER
	SAD	SEE ARCHITECTURAL DRAWINGS
	SSD	SEE STRUCTURAL DRAWINGS
	U.O.N.	UNLESS OTHERWISE NOTED
	WHA	WATER HAMMER ARRESTOR

DRAWING INDEX

P0.1	LEGEND, SCHEDULES AND GENERAL NOTES
P1.1	SITE PLAN
P1.2	DEMOLITION PLANS - PLUMBING
P2.1A	FLOOR PLAN - PLUMBING - NORTH
P2.1B	FLOOR PLAN - PLUMBING - CENTRAL
P2.1C	FLOOR PLAN - PLUMBING - SOUTH
P3.1	ROOF PLAN - PLUMBING
P4.1	PARTIAL FLOOR PLANS - PLUMBING
P5.1	DETAILS AND DIAGRAMS

FIELD PAOLI

Architecture
1045 Sansome St.
Suite 206
San Francisco
California, 94111
Tel. 415. 788. 6606
Fax 415. 788. 6650

SARATOGA LIBRARY

SANTA CLARA COUNTY LIBRARY

13650 Saratoga Avenue
Saratoga, California 95070

MECHANICAL DESIGN STUDIO inc
3330 Clayton Rd. Suite B
Concord California 94519-2508
tel 925. 680 0858
fax 925. 680 4348
www.mds-sf.com
PROJECT # 3024.00

LICENSED ARCHITECT JULIE WHITE STATE OF CALIFORNIA NO. C 13803 REN.

DATE	JANUARY 25, 2002
REVISIONS	

CONSTRUCTION DOCUMENTS
BID SET
△1 ADDENDUM 1 11/20/01
CONFORM SET RE-PLOT

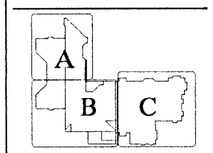

LEGEND, SCHEDULES AND GENERAL NOTES

SCALE	NONE
DRAWN BY	JLW/LK
CHECKED BY	DA
JOB NO.	0101

PHASE 2

SHEET NO. **P0.1**

All drawings and written material appearing herein constitute the original and unpublished work of the architect and the same may not be duplicated, used, or disclosed without the written consent of the architect ©Field Paoli

01/28/02 1:56:00 PM F:\C_3000\3024.00 SARATOGA LIBRARY\DRAWINGS\3024P01.DWG

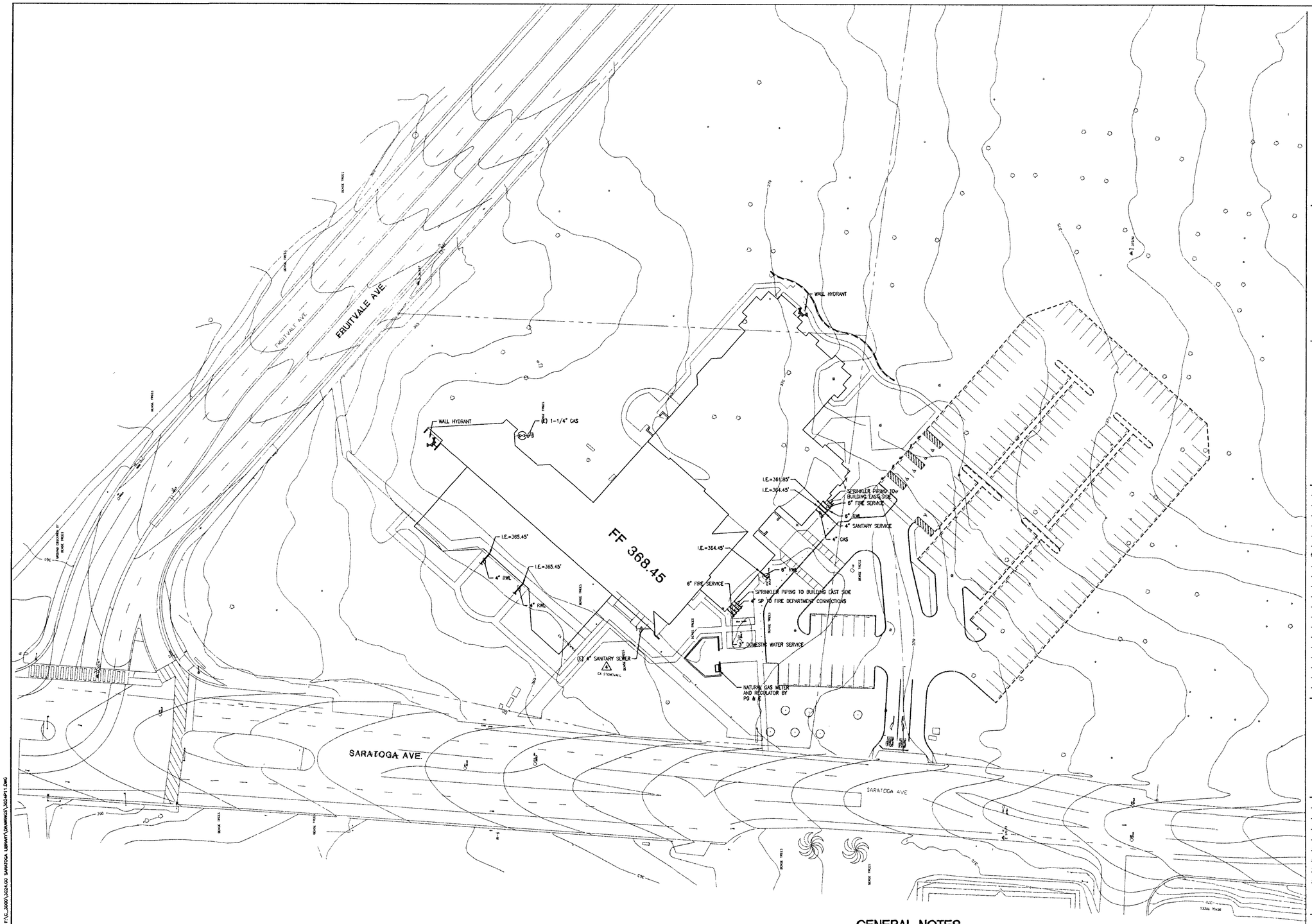

GENERAL NOTES

1. FOR CONTINUATION OF ALL UTILITIES REFER TO CIVIL DRAWINGS.

1 SITE PLAN
SCALE: 1" = 30'-0"

FIELD PAOLI

Architecture
1045 Sansome St.
Suite 206
San Francisco
California, 94111
Tel. 415. 788. 6606
Fax 415. 788. 6650

SARATOGA LIBRARY

SANTA CLARA COUNTY LIBRARY

13650 Saratoga Avenue
Saratoga, California 95070

MECHANICAL DESIGN STUDIO Inc
3330 Clayton Rd. Suite B
Concord California 94519-2538
tel 925. 686 6808
fax 925. 686 4348
www.mds-inf.com
PROJECT # 3024.00

LICENSED ARCHITECT
REGISTERED PROFESSIONAL ENGINEER
NO. C 13808
REN.
STATE OF CALIFORNIA

DATE	JANUARY 25, 2002
REVISIONS	
	CONSTRUCTION DOCUMENTS
	BID SET
1 ADDENDUM 4	12/27/01
	CONFORM SET RE-PLOT

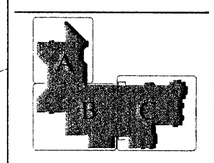

SITE PLAN

SCALE	1" = 30'-0"
DRAWN BY	JLW/LK
CHECKED BY	NA
JOB NO.	0101

PHASE 2

SHEET NO. **P1.1**

All drawings and written material appearing herein constitute the original and unpublished work of the architect and the same may not be duplicated, used, or disclosed without the written consent of the architect ©Field Paoli

01/29/02 1:56:57 PM F:\C_3000\3024.00 SARATOGA LIBRARY\DRAWINGS\3024P11.DWG

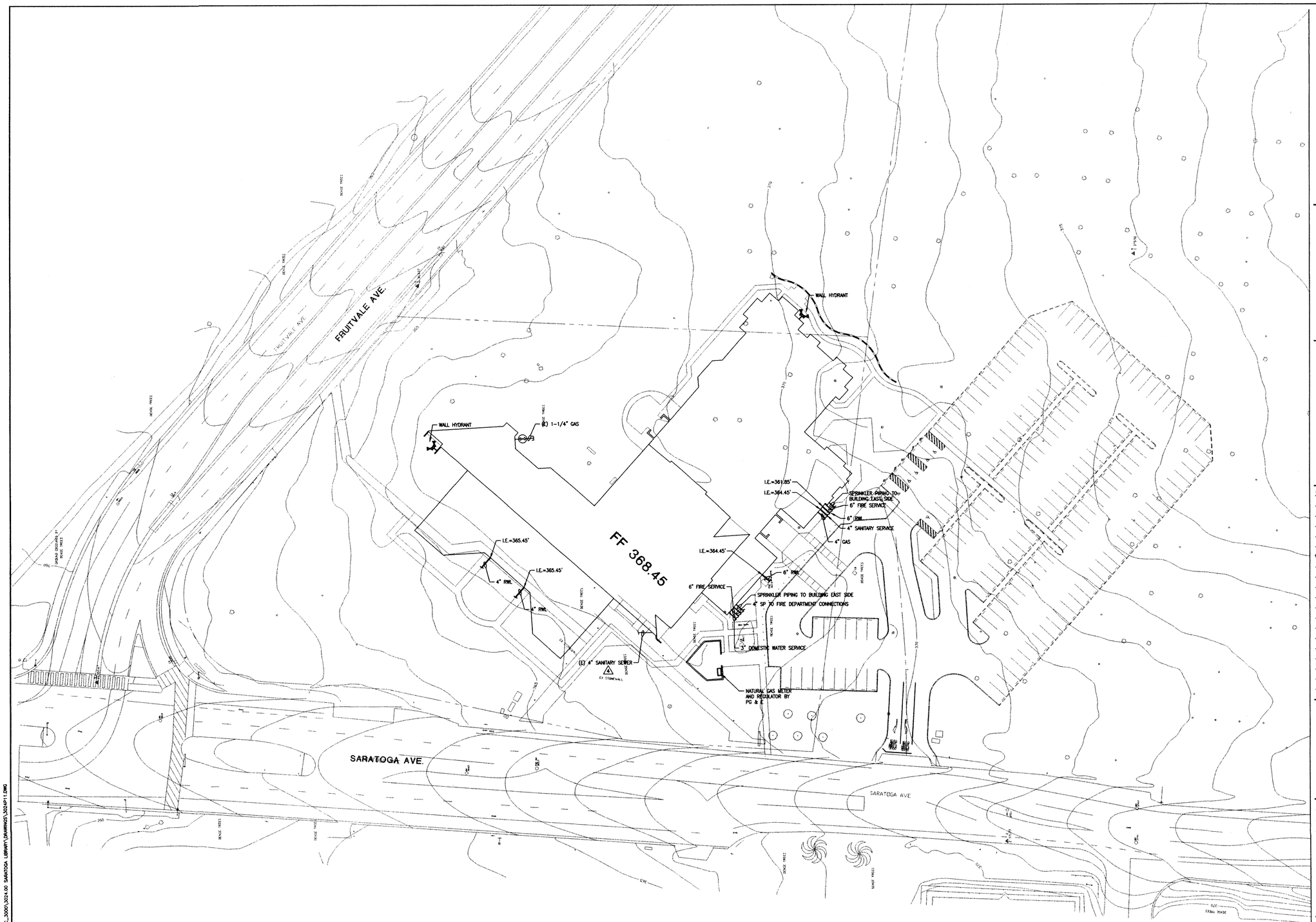

GENERAL NOTES

1. FOR CONTINUATION OF ALL UTILITIES REFER TO CIVIL DRAWINGS.

1 SITE PLAN
SCALE: 1" = 30'-0"

01/28/02 1:56:57 PM F:\C_3000\3024.00 SARATOGA LIBRARY\DRAWINGS\3024P11.DWG

FIELD PAOLI

Architecture
1045 Sansome St.
Suite 206
San Francisco
California, 94111
Tel. 415. 788. 6606
Fax 415. 788. 6650

SARATOGA LIBRARY

SANTA CLARA COUNTY LIBRARY

13650 Saratoga Avenue
Saratoga, California 95070

MECHANICAL DESIGN STUDIO inc
3330 Clayton Rd. Suite B
Concord California 94519-2838
tel 925. 680 8858
fax 925. 680 4346
www.mds-sf.com
PROJECT # 3024.00

REG. C 18809
EXPIR.

DATE	JANUARY 25, 2002
REVISIONS	

CONSTRUCTION DOCUMENTS
BID SET
4 ADDENDUM 4 12/27/01
CONFORM SET RE-PLOT

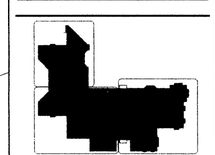

SITE PLAN

SCALE	1" = 30'-0"
DRAWN BY	JLW/LK
CHECKED BY	MA
JOB NO.	0101

PHASE 2

SHEET NO. **P1.1**

All drawings and written material appearing herein constitute the original and unpublished work of the architect and the same may not be duplicated, used, or disclosed without the written consent of the architect © Field Paoli

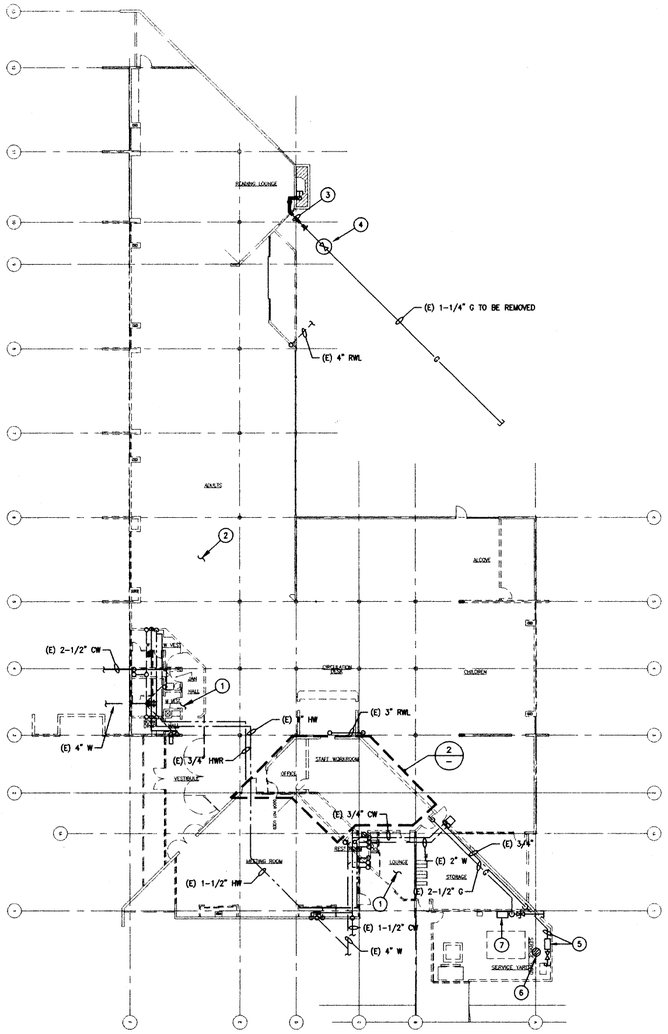

1 FLOOR PLAN - DEMOLITION

SCALE: 1/16" = 1'-0"

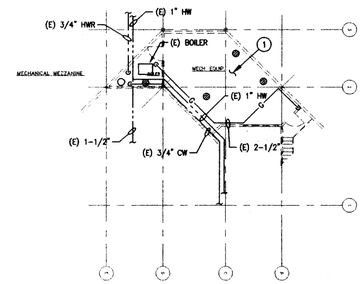

2 MEZZANINE PLAN - DEMOLITION

SCALE: 1/16" = 1'-0"

SHEET NOTES

1. ALL EXISTING PLUMBING EQUIPMENT FIXTURES, PIPING AND RELATED PLUMBING TRIM AND ACCESSORIES SHALL BE REMOVED.
2. ALL EXISTING SPRINKLER PIPING AND HEADS SHALL BE REMOVED.
3. (E) 1-1/4" C IN PVC SLEEVE TO REMAIN.
4. (E) SHUT-OFF VALVE IN CONCRETE BOX. VALVE AND BOX TO BE REMOVED.
5. (E) 3/4" CW AND BACKFLOW PREVENTER TO BE REMOVED.
6. (E) AREA DRAIN AND RELATED PIPING TO BE REMOVED.
7. (E) GAS METER AND REGULATOR TO BE REMOVED BY PG&E.

GENERAL NOTES

1. COMPLETE ALL DEMOLITION WORK NOT FINISHED IN PHASE I.

TRUE NORTH

PROJ. NORTH

FIELD PAOLI

Architecture
1045 Sansome St.
Suite 206
San Francisco
California, 94111
Tel. 415. 788. 6606
Fax 415. 788. 6650

SARATOGA LIBRARY

SANTA CLARA COUNTY LIBRARY

13650 Saratoga Avenue
Saratoga, California 95070

MECHANICAL DESIGN STUDIO inc
3330 Clayton Rd. Suite B
Concord California 94518-2838
tel 925. 680 6858
fax 925. 680 4348
www.mds-ef.com
PROJECT # 3024.00

No. M 2656
Expires 06/30/02
STATE OF CALIFORNIA

No. C 18809
REN.
STATE OF CALIFORNIA

DATE	OCTOBER 26, 2001
REVISIONS	

CONSTRUCTION DOCUMENTS
BID SET

DEMOLITION PLANS
PLUMBING

SCALE	1/16" = 1'-0"
DRAWN BY	JLW/LK
CHECKED BY	MA
JOB NO.	0101

PHASE 2

SHEET NO. **P1.2**

All drawings and written material appearing herein constitute the original and unpublished work of the architect and the same may not be duplicated, used, or disclosed without the written consent of the architect ©Field Paoli

11/02/01 2:14:40 PM \\CONCORD\MDS DATA\C_3024\3024.00 SARATOGA LIBRARY\DRAWINGS\3024P12.DWG

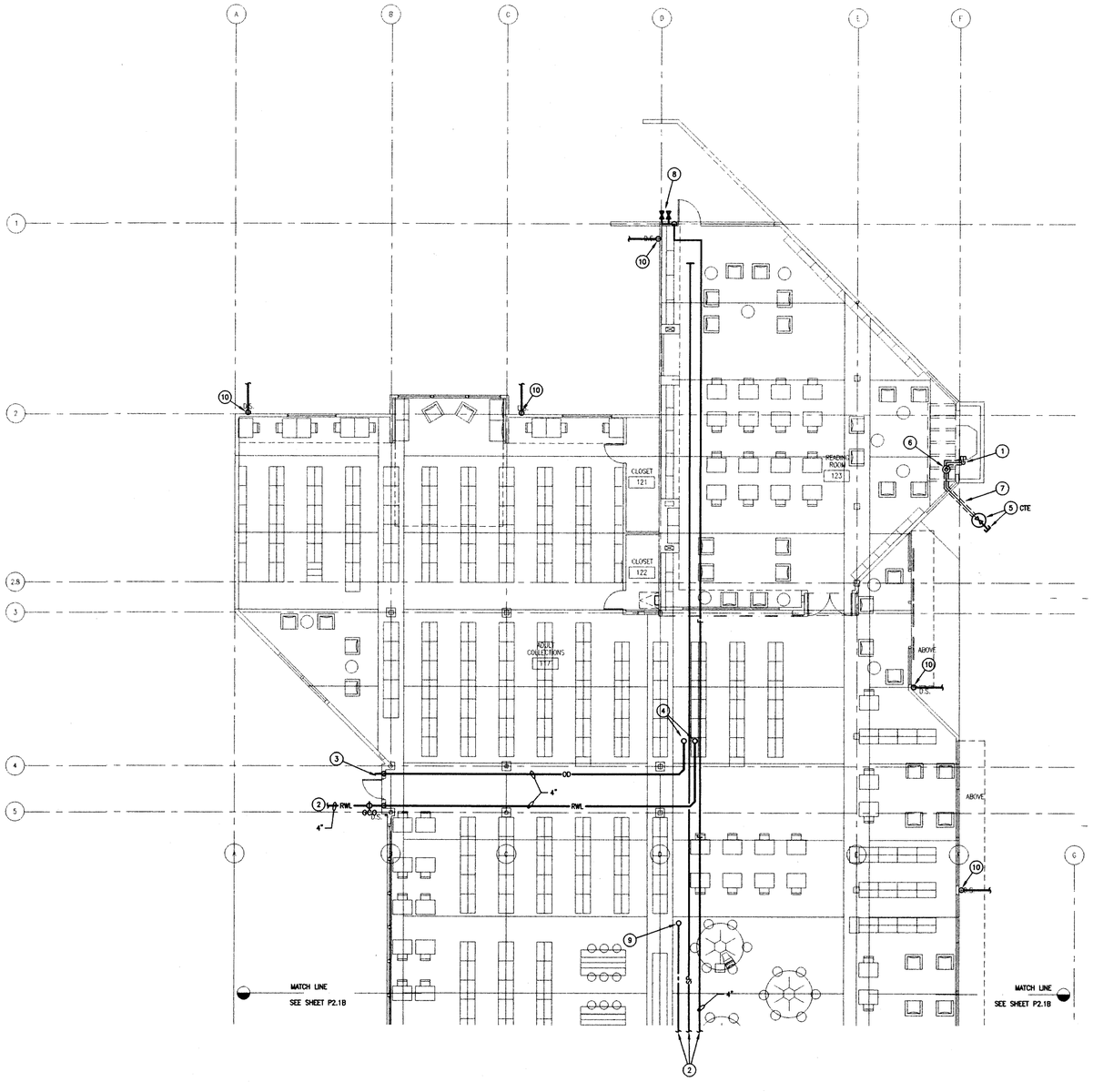

SHEET NOTES

1. (E) 1-1/4" GAS LINE TO FIREPLACE.
2. FOR CONTINUATION SEE PHASE I DRAWINGS.
3. 3" OD – DN IN WALL. DAYLIGHT 12" ABOVE GROUND (SAD). PROVIDE BIRDSCREEN.
4. 3" RWL AND 3" OD – UP TO RD-1 AND OD-1.
5. (N) 1-1/4" GAS SHUT-OFF VALVE IN CONCRETE CHRISTY BOX. CAP FOR FUTURE CONNECTION.
6. (E) CONTROL VALVE TO REMAIN.
7. (E) 1-1/4" GAS PIPING IN PVC SLEEVE TO REMAIN.
8. WALL HYDRANT AS MANUFACTURED BY POTTER-ROEMER, FIGURE NO. 5862-C, ROUGH CHROME FINISH FOR EXPOSED PARTS, LETTERING ON PLATE "HYDRANT".
9. 3/4" CW – UP.
10. 4" DOWNSPOUT (SAD). PROVIDE CAST IRON "BOOT" FOR CONNECTION TO UNDERGROUND STORM DRAIN (SEE CIVIL DRAWINGS).

1 FLOOR PLAN - PLUMBING - NORTH
SCALE: 1/8" = 1'-0"

0 1 4 8 16 24 FEET

TRUE NORTH
PROJ. NORTH

FIELD PAOLI

Architecture
1045 Sansome St.
Suite 206
San Francisco
California, 94111
Tel. 415. 788. 6606
Fax 415. 788. 6650

SARATOGA LIBRARY

SANTA CLARA COUNTY LIBRARY

13650 Saratoga Avenue
Saratoga, California 95070

MECHANICAL DESIGN STUDIO Inc
3330 Clayton Rd. Suite B
Concord California 94519-2838
tel 925. 680 6858
fax 925. 680 4346
www.mds-sf.com
PROJECT # 3024.00

DATE	OCTOBER 26, 2001
REVISIONS	
	CONSTRUCTION DOCUMENTS
	BID SET

B C

FLOOR PLAN
PLUMBING
NORTH

SCALE	1/8" = 1'-0"
DRAWN BY	JLW/LK
CHECKED BY	DA
JOB NO.	0101

PHASE 2

SHEET NO. **P2.1A**

All drawings and written material appearing herein constitute the original and unpublished work of the architect and the same may not be duplicated, used, or disclosed without the written consent of the architect ©Field Paoli

11/02/01 2:14:31 PM F:\C_3000\3024.00 SARATOGA LIBRARY\DRAWINGS\3024P21A.DWG

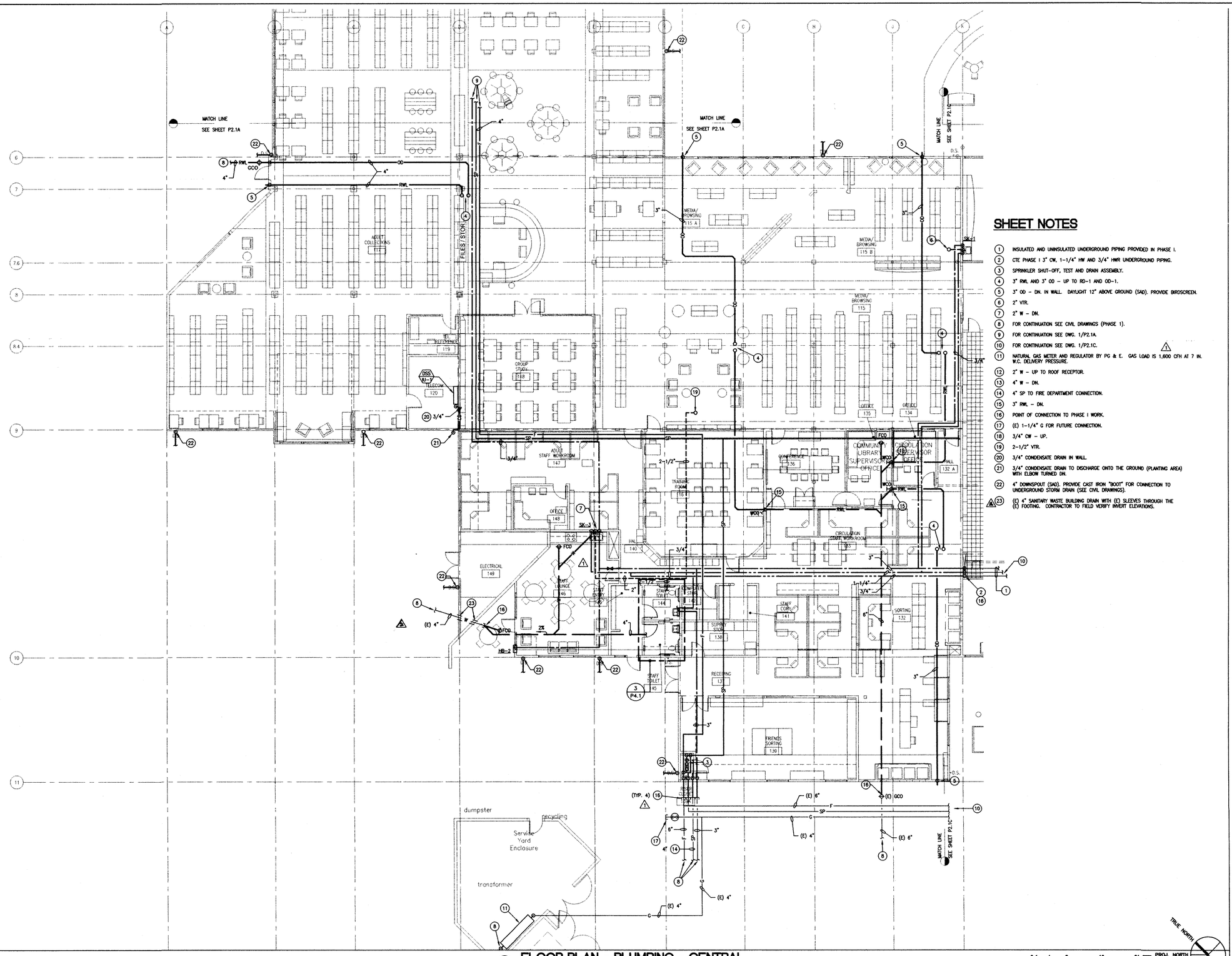

1 FLOOR PLAN - PLUMBING - CENTRAL
SCALE: 1/8" = 1'-0"

SHEET NOTES

1. INSULATED AND UNINSULATED UNDERGROUND PIPING PROVIDED IN PHASE I.
2. CTE PHASE I 3" CW, 1-1/4" HW AND 3/4" HWR UNDERGROUND PIPING.
3. SPRINKLER SHUT-OFF, TEST AND DRAIN ASSEMBLY.
4. 3" RWL AND 3" OD - UP TO RD-1 AND OD-1.
5. 3" OD - DN. IN WALL. DAYLIGHT 12" ABOVE GROUND (SAD). PROVIDE BIRDSCREEN.
6. 2" VTR.
7. 2" W - DN.
8. FOR CONTINUATION SEE CIVIL DRAWINGS (PHASE 1).
9. FOR CONTINUATION SEE DWG. 1/P2.1A.
10. FOR CONTINUATION SEE DWG. 1/P2.1C.
11. NATURAL GAS METER AND REGULATOR BY PG & E. GAS LOAD IS 1,600 CFH AT 7 IN. W.C. DELIVERY PRESSURE.
12. 2" W - UP TO ROOF RECEPTOR.
13. 4" W - DN.
14. 4" SP TO FIRE DEPARTMENT CONNECTION.
15. 3" RWL - DN.
16. POINT OF CONNECTION TO PHASE I WORK.
17. (E) 1-1/4" G FOR FUTURE CONNECTION.
18. 3/4" CW - UP.
19. 2-1/2" VTR.
20. 3/4" CONDENSATE DRAIN IN WALL.
21. 3/4" CONDENSATE DRAIN TO DISCHARGE ONTO THE GROUND (PLANTING AREA) WITH ELBOW TURNED DN.
22. 4" DOWNSPOUT (SAD). PROVIDE CAST IRON "BOOT" FOR CONNECTION TO UNDERGROUND STORM DRAIN (SEE CIVIL DRAWINGS).
23. (E) 4" SANITARY WASTE BUILDING DRAIN WITH (E) SLEEVES THROUGH THE (E) FOOTING. CONTRACTOR TO FIELD VERIFY INVERT ELEVATIONS.

FIELD PAOLI

Architecture
1045 Sansome St.
Suite 206
San Francisco
California, 94111
Tel. 415. 788. 6606
Fax 415. 788. 6650

SARATOGA LIBRARY

SANTA CLARA COUNTY LIBRARY

13650 Saratoga Avenue
Saratoga, California 95070

MECHANICAL DESIGN STUDIO inc
3330 Clayton Rd. Suite B
Concord California 94519-2838
tel 925. 680 6958
fax 925. 680 4346
www.mds-ef.com
PROJECT # 3024.00

DATE	JANUARY 25, 2002

REVISIONS

CONSTRUCTION DOCUMENTS

BID SET

1	ADDENDUM 1	11/20/01
2	ADDENDUM 4	12/27/01

CONFORM SET RE-PLOT

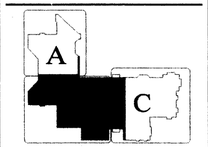

FLOOR PLAN
PLUMBING
CENTRAL

SCALE	1/8" = 1'-0"
DRAWN BY	JLW/LK
CHECKED BY	DA
JOB NO.	0101

PHASE 2

SHEET NO. **P2.1B**

All drawings and written material appearing herein constitute the original and unpublished work of the architect and the same may not be duplicated, used, or disclosed without the written consent of the architect. ©Field Paoli

TRUE NORTH
PROJ. NORTH
0 1 4 8 16 24 FEET

01/28/02 2:07:51 PM F:\C_3000\3024.00 SARATOGA LIBRARY\DRAWINGS\3024P2.1B.DWG

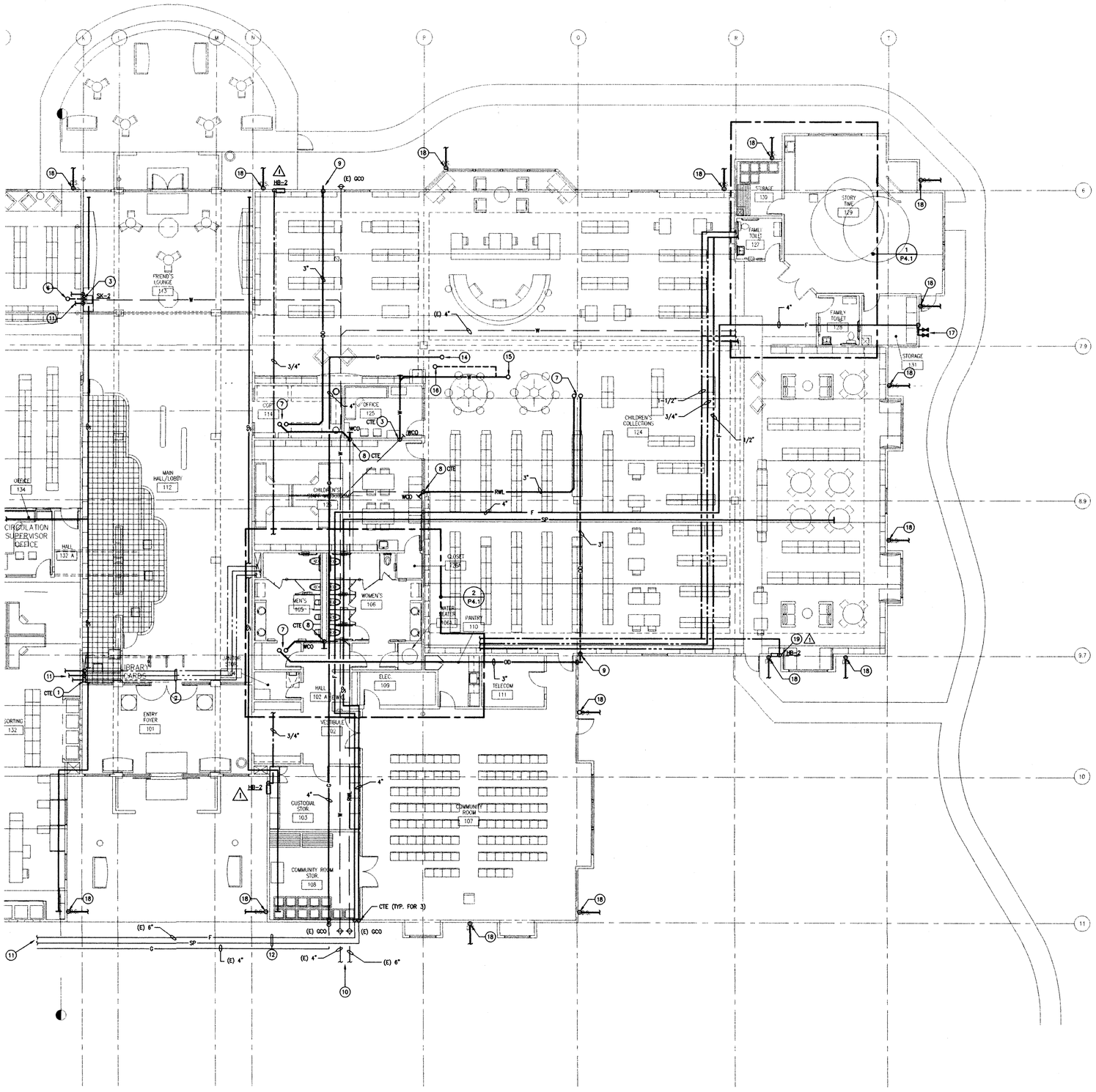

SHEET NOTES

1. 3" CW, 1-1/4" HW AND 3/4" HWR DN.
2. UNDERFLOOR PIPING. (PROVIDED UNDER PHASE I).
3. 2" W - DN.
4. NOT USED.
5. NOT USED.
6. 1-1/2" CTR.
7. 3" RWL AND 3" OD - UP TO RD AND OD-1.
8. 3" RWL - DN.
9. 3" OD - DN IN WALL. DAYLIGHT 12" ABOVE GROUND (SAD). PROVIDE BIRDSCREEN.
10. FOR CONTINUATION SEE CIVIL DWGS.
11. FOR CONTINUATION SEE DWG. 1/P2.1B.
12. UNDERFLOOR PIPING. (PROVIDED UNDER PHASE I).
13. FOR CONTINUATION REFER TO PHASE I.
14. 4" G - UP TO HHWS-1
15. 2" W - UP TO RC-1
16. 2" V - UP.
17. WALL HYDRANT AS MANUFACTURED BY POTTER-ROEMER, FIGURE NO. 5862-C, ROUGH CHROME FINISH FOR EXPOSED PARTS, LETTERING ON PLATE "HYDRANT".
18. 4" DOWNSPOUT (SAD) PROVIDE CAST IRON "BOOT" FOR CONNECTION TO UNDERGROUND STORM DRAIN (SEE CIVIL DRAWINGS).
19. △1 3/4" CW - DN IN WALL. PROVIDE SHUT-OFF VALVE AND ACCESS PANEL.

1 FLOOR PLAN - PLUMBING

SCALE: 1/8" = 1'-0"

0 1 4 8 16 24 FEET PROJ. NORTH

TRUE NORTH

FIELD PAOLI

Architecture
1045 Sansome St.
Suite 206
San Francisco
California, 94111
Tel. 415. 788. 6606
Fax 415. 788. 6650

SARATOGA LIBRARY

SANTA CLARA COUNTY LIBRARY

13650 Saratoga Avenue
Saratoga, California 95070

MECHANICAL DESIGN STUDIO Inc
3330 Clayton Rd. Suite B
Concord California 94519-2838
tel 925. 680 6858
fax 925. 680 4344
www.mds-ef.com
PROJECT # 3024.00

REGISTERED PROFESSIONAL ENGINEER NO. C 13803 MECH. STATE OF CALIFORNIA

DATE	OCTOBER 26, 2001
REVISIONS	
	CONSTRUCTION DOCUMENTS
	BID SET
△1 ADDENDUM 1	11/20/01
	CONFORM SET RE-PLOT

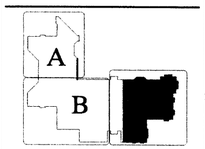

FLOOR PLAN
PLUMBING
SOUTH

SCALE	1/8" = 1'-0"
DRAWN BY	JLW/LK
CHECKED BY	DA
JOB NO.	0101

PHASE 2

SHEET NO. **P2.1C**

All drawings and written material appearing herein constitute the original and unpublished work of the architect and the same may not be duplicated, used, or disclosed without the written consent of the architect. © Field Paoli

01/28/02 2:17:14 PM F:\JL_3000\3024.00 SARATOGA LIBRARY\DRAWINGS\3024P2C1C.DWG

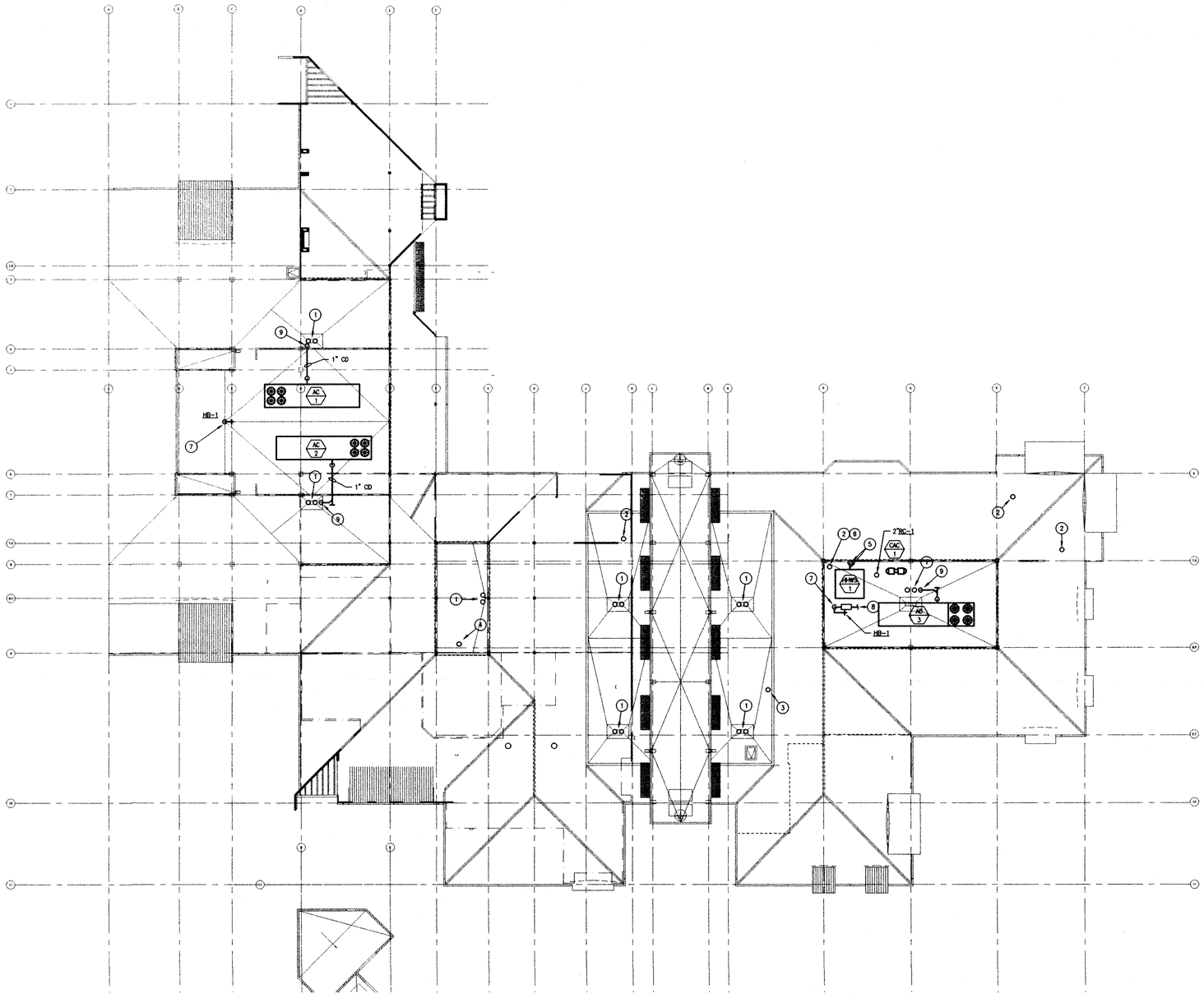

SHEET NOTES

1. 3" RD-1 AND 3" OD-1.
2. 2" VTR.
3. 3" VTR.
4. 2-1/2" VTR.
5. 4" G - DN. PROVIDE FLEXIBLE PIPE CONNECTOR AND DIRT LEG.
6. 2" VENT TO EXTEND TO PARAPET LEVEL.
7. 3/4" CW - DN. PROVIDE HOSE BIBB HB-1.
8. 3/4" MAKE-UP WATER TO HWWS-1. PROVIDE REDUCED PRESSURE BACKFLOW PREVENTER AND FLEXIBLE PIPE CONNECTOR.
9. TERMINATE AC UNIT CD DIRECTLY INTO ROOF DRAIN (DO NOT LET CONDENSATE DRAIN ON ROOF).

1 ROOF PLAN - PLUMBING
SCALE: 1/8" = 1'-0"

TRUE NORTH
PROJ. NORTH

FIELD PAOLI

Architecture
1045 Sansome St.
Suite 206
San Francisco
California, 94111
Tel. 415. 788. 6606
Fax 415. 788. 6650

SARATOGA LIBRARY

SANTA CLARA COUNTY LIBRARY

13650 Saratoga Avenue
Saratoga, California 95070

MECHANICAL DESIGN STUDIO inc
3330 Clayton Rd. Suite B
Concord California 94519-2638
tel 925. 680 6858
fax 925. 680 4344
www.mds-sf.com
PROJECT # 3024.00

DATE	OCTOBER 26, 2001
REVISIONS	

CONSTRUCTION DOCUMENTS
BID SET

ROOF PLAN - PLUMBING

SCALE	1/16" = 1'-0"
DRAWN BY	JLW/LK
CHECKED BY	DA
JOB NO.	0101

PHASE 2

SHEET NO. **P3.1**

All drawings and written material appearing herein constitute the original and unpublished work of the architect and the same may not be duplicated, used, or disclosed without the written consent of the architect. © Field Paoli

11/02/01 2:15:21 PM F:\C...3000\3024.00 SARATOGA LIBRARY\DRAWINGS\3024P31.DWG

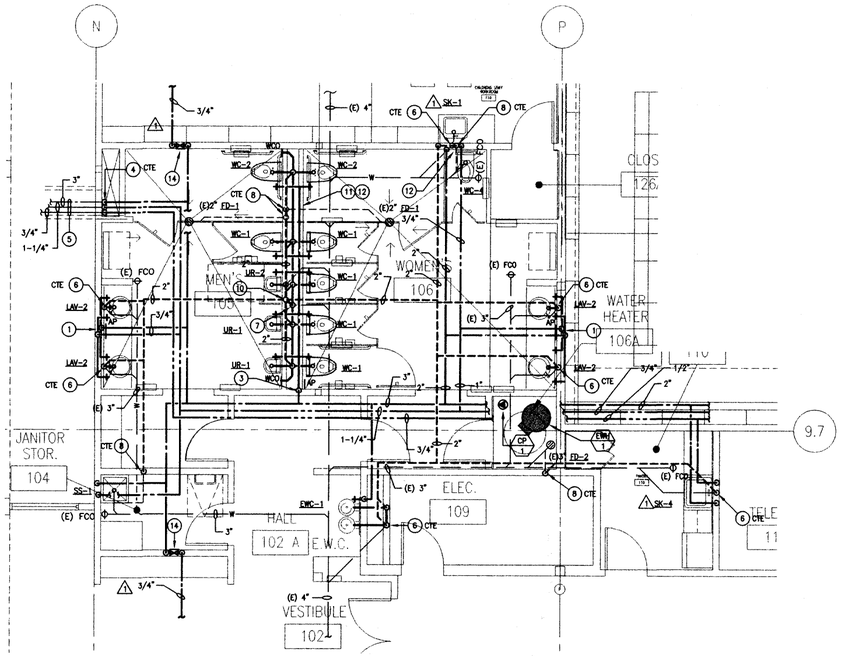

2 PARTIAL PLUMBING PLAN
SCALE: 1/4" = 1'-0"

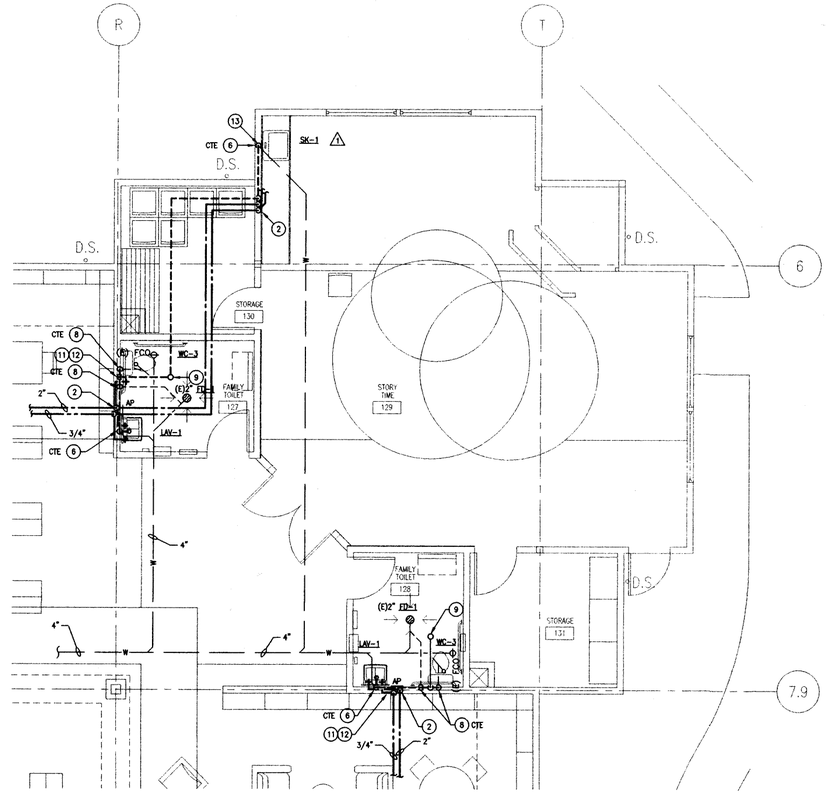

1 PARTIAL PLUMBING PLAN
SCALE: 1/4" = 1'-0"

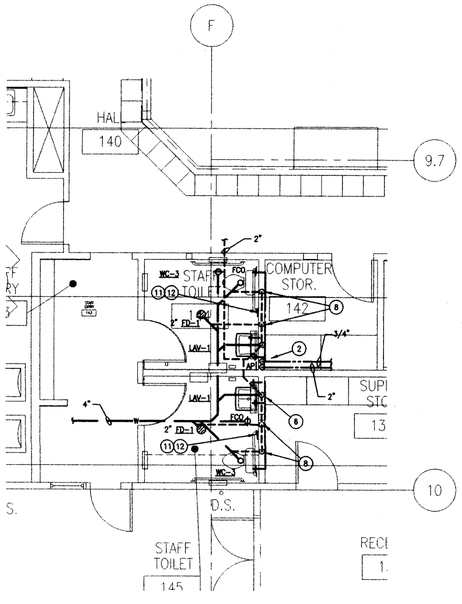

3 PARTIAL PLUMBING PLAN
SCALE: 1/4" = 1'-0"

SHEET NOTES

1. 3/4" CW AND 3/4" HW SHUT-OFF VALVES, IN VERTICAL, IN WALL, WITH ACCESS PANEL.
2. 2" CW AND 3/4" HW SHUT-OFF VALVES, IN VERTICAL, IN WALL, WITH ACCESS PANEL.
3. 2-1/2" CW SHUT-OFF VALVES, IN VERTICAL, IN CHASE, WITH ACCESS PANEL.
4. 3" CW, 1-1/4" HW AND 3/4" HWR DN. IN TRENCH.
5. (E) PIPES RUNNING IN TRENCH.
6. 2" W - DN.
7. 4" W - DN.
8. 2" V - DN.
9. 2" VTR.
10. 3" VTR.
11. PROVIDE TRAP PRIMER FITTING IN WALL/CHASE WITH ACCESS PANEL.
12. PROVIDE HAMMER ARRESTOR IN WALL/CHASE WITH ACCESS PANEL.
13. WALL CLEANOUT BELOW SINK.
14. 3/4" CW SHUT-OFF VALVE IN WALL WITH ACCESS PANEL.

TRUE NORTH
PROJ. NORTH

FIELD PAOLI

Architecture
1045 Sansome St.
Suite 206
San Francisco
California, 94111
Tel. 415. 788. 6606
Fax 415. 788. 6650

SARATOGA LIBRARY

SANTA CLARA COUNTY LIBRARY

13650 Saratoga Avenue
Saratoga, California 95070

MECHANICAL DESIGN STUDIO inc
3330 Clayton Rd. Suite B
Concord California 94519-2036
tel 925. 680 8898
fax 925. 680 4346
www.mds-sf.com
PROJECT # 3024.00

NO. C 12803
REN.

DATE	JANUARY 25, 2002
REVISIONS	
	CONSTRUCTION DOCUMENTS
	BID SET
1 ADDENDUM 1	11/20/01
	CONFORM SET RE-PLOT

PARTIAL FLOOR PLANS - PLUMBING

SCALE	AS NOTED
DRAWN BY	JLW/LK
CHECKED BY	DA
JOB NO.	0101

PHASE 2

SHEET NO. **P4.1**

All drawings and written material appearing herein constitute the original and unpublished work of the architect and the same may not be duplicated, used, or disclosed without the written consent of the architect ©Field Paoli

02/07/02 11:26:48 AM F:\C_3000\3024.00 SARATOGA LIBRARY\DRAWINGS\3024P41.DWG

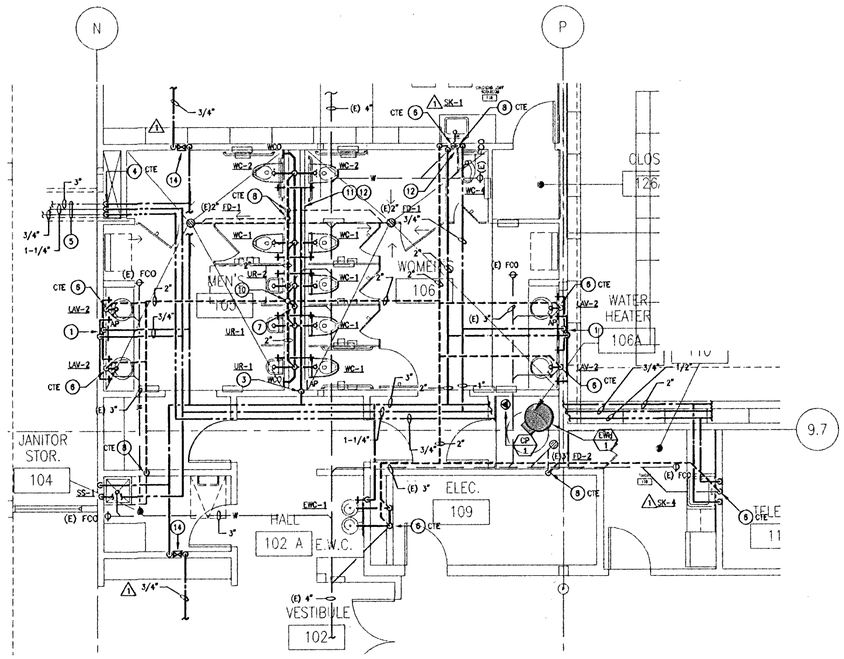

2 PARTIAL PLUMBING PLAN
SCALE: 1/4" = 1'-0"

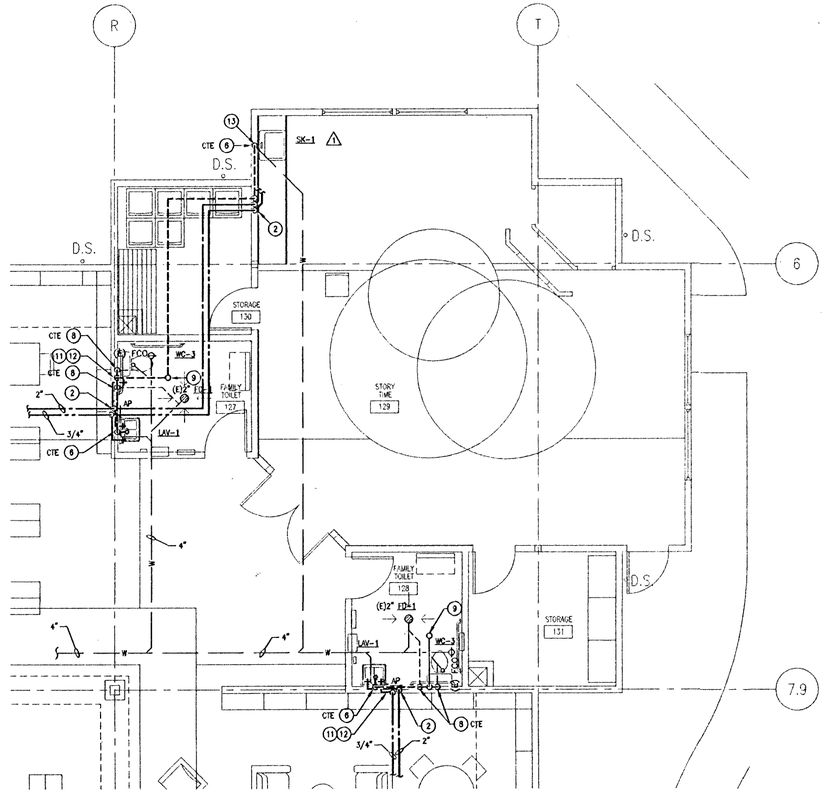

1 PARTIAL PLUMBING PLAN
SCALE: 1/4" = 1'-0"

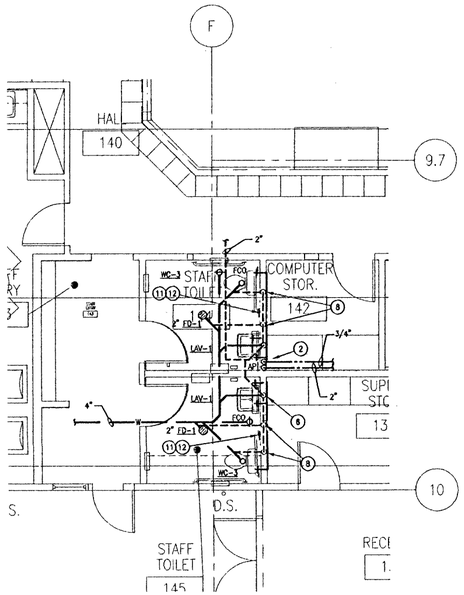

3 PARTIAL PLUMBING PLAN
SCALE: 1/4" = 1'-0"

SHEET NOTES

1. 3/4" CW AND 3/4" HW SHUT-OFF VALVES, IN VERTICAL, IN WALL WITH ACCESS PANEL.
2. 2" CW AND 3/4" HW SHUT-OFF VALVES, IN VERTICAL, IN WALL WITH ACCESS PANEL.
3. 2-1/2" CW SHUT-OFF VALVES, IN VERTICAL, IN CHASE, WITH ACCESS PANEL.
4. 3" CW, 1-1/4" HW AND 3/4" HWR DN. IN TRENCH.
5. (E) PIPES RUNNING IN TRENCH.
6. 2" W - DN.
7. 4" W - DN.
8. 2" V - DN.
9. 2" VTR.
10. 3" VTR.
11. PROVIDE TRAP PRIMER FITTING IN WALL/CHASE WITH ACCESS PANEL.
12. PROVIDE HAMMER ARRESTOR IN WALL/CHASE WITH ACCESS PANEL.
13. WALL CLEANOUT BELOW SINK.
14. 3/4" CW SHUT-OFF VALVE IN WALL WITH ACCESS PANEL.

TRUE NORTH
PROJ. NORTH

FIELD PAOLI

Architecture
1045 Sansome St.
Suite 206
San Francisco
California, 94111
Tel. 415. 788. 6606
Fax 415. 788. 6650

SARATOGA LIBRARY

SANTA CLARA COUNTY LIBRARY

13650 Saratoga Avenue
Saratoga, California 95070

MECHANICAL DESIGN STUDIO inc
3330 Clayton Rd. Suite B
Concord California 94519-2538
tel 925. 680 6858
fax 925. 680 4348
www.mds-ac.com
PROJECT # 3024.00

LICENSED ARCHITECT
NO. C 13809
REN.
STATE OF CALIFORNIA

DATE	JANUARY 25, 2002
REVISIONS	
CONSTRUCTION DOCUMENTS	
BID SET	
1 ADDENDUM 1	11/20/01
CONFORM SET RE-PLOT	

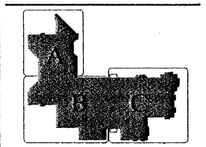

PARTIAL FLOOR PLANS - PLUMBING

SCALE	AS NOTED
DRAWN BY	JLW/LK
CHECKED BY	DA
JOB NO.	0101

PHASE 2

SHEET NO. **P4.1**

All drawings and written material appearing herein constitute the original and unpublished work of the architect and the same may not be duplicated, used, or disclosed without the written consent of the architect ©Field Paoli

02/07/02 11:26:48 AM F:\S_3000\3024-00 SARATOGA LIBRARY\DRAWINGS\3024-41.DWG

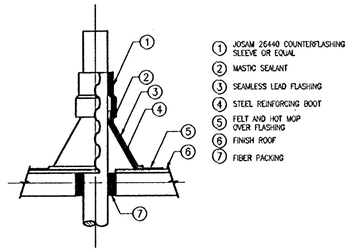

4 VENT THRU ROOF DETAIL
NOT TO SCALE

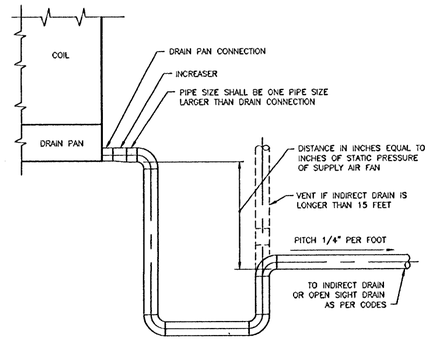

7 AHU CONDENSATE DRAIN TRAP PIPING DETAIL
NO SCALE

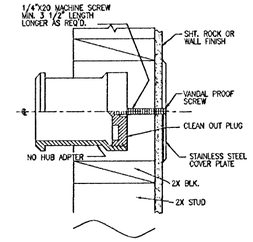

3 WALL CLEANOUT
NOT TO SCALE

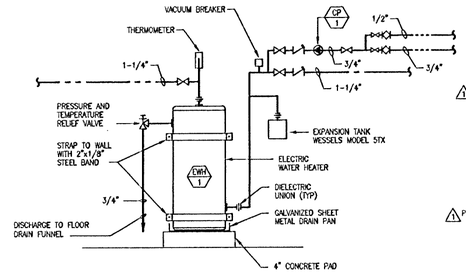

6 ELECTRIC WATER HEATER DETAIL
NOT TO SCALE

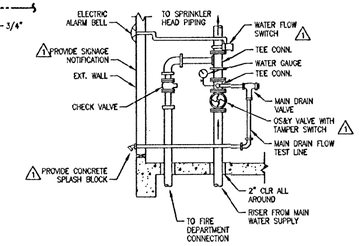

2 FIRE SPRINKLER RISER
NOT TO SCALE

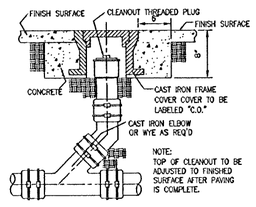

5 CLEANOUT TO GRADE
NOT TO SCALE

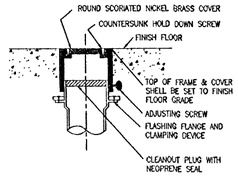

1 FLOOR CLEANOUT
NOT TO SCALE

FIELD PAOLI

Architecture
1045 Sansome St.
Suite 206
San Francisco
California, 94111
Tel. 415. 788. 6606
Fax 415. 788. 6650

SARATOGA LIBRARY

SANTA CLARA COUNTY LIBRARY

13650 Saratoga Avenue
Saratoga, California 95070

3330 Clayton Rd. Suite B
Concord California 94519-2838
tel 925. 680 5858
fax 925. 680 4348
www.mdp-ef.com
PROJECT # 3024.00

LICENSED MECHANICAL ENGINEER
NO. E 13808
REN.
STATE OF CALIFORNIA

DATE	JANUARY 25, 2002
REVISIONS	
	CONSTRUCTION DOCUMENTS
	BID SET
1 ADDENDUM 1	11/20/01
	CONFORM SET RE-PLOT

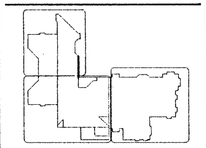

DETAILS AND DIAGRAMS

SCALE	AS NOTED
DRAWN BY	JLW/LK
CHECKED BY	OA
JOB NO.	0101

PHASE 2

SHEET NO. **P5.1**

All drawings and written material appearing herein constitute the original and unpublished work of the architect and the same may not be duplicated, used, or disclosed without the written consent of the architect ©Field Paoli

01/28/02 2:25:45 PM F:\C_3000\3024.00 SARATOGA LIBRARY\DRAWINGS\3024P51.DWG

SARATOGA_LIBRARY_200095

(USING ARIAL.SHX FOR MISSING AlbertusExtraBold FONT)

GENERAL NOTES

1. PRIOR TO BID, CONTRACTOR SHALL VISIT THE SITE TO ADEQUATELY DETERMINE ALL PRE-EXISTING CONDITIONS. BY THE ACT OF SUBMITTING A BID, THE CONTRACTOR WILL BE DEEMED TO HAVE COMPLIED WITH THE FOREGOING, TO HAVE ACCEPTED SUCH CONDITIONS, AND TO HAVE MADE ALLOWANCES THEREFORE IN PREPARING THEIR BID.
2. PROVIDE PARITY SIZED GREEN GROUND WIRE IN ALL POWER CONDUITS, BRANCH CIRCUITS (LIGHTING & POWER) AND HOMERUNS. PROVIDE ADDITIONAL ISOLATED GROUND, GREEN WITH YELLOW STRIPE, TO ALL ISOLATED GROUND RECEPTACLES.
3. PROVIDE PULLROPE IN ALL EMPTY CONDUITS THROUGHOUT THE PROJECT.
4. REFER TO ARCHITECTURAL REFLECTED CEILING PLANS, ELEVATIONS, AND DETAILS FOR EXACT LOCATION & CONNECTION REQUIREMENTS OF ALL LIGHTING FIXTURES. COORDINATE LOCATIONS OF ALL LIGHTING FIXTURES, OUTLETS AND JUNCTION BOXES WITH DIVISION 15 PRIOR TO ROUGH-IN.
5. REFER TO MECHANICAL PLANS FOR EXACT LOCATION OF ALL MECHANICAL EQUIPMENT. VERIFY EXACT LOCATION AND CONNECTION REQUIREMENTS OF ALL MECHANICAL EQUIPMENT WITH DIVISION 15 PRIOR TO ROUGH-IN. VERIFY EXACT REQUIREMENTS FOR VOLTAGE, PHASE, HORSE-POWER, OR KVA RATINGS, OF ALL DIVISION 15 EQUIPMENT REQUIRING ELECTRICAL CONNECTION.
6. VERIFY EXACT CONNECTION REQUIREMENTS, OUTLET TYPE, HEIGHT, AND LOCATION OF ALL OWNER SUPPLIED EQUIPMENT OR EQUIPMENT PROVIDED UNDER OTHER SECTIONS OF THE SPECIFICATIONS PRIOR TO ROUGH-IN. REFER TO ARCHITECTURAL DRAWINGS FOR EQUIPMENT LOCATIONS.
7. COORDINATE TRENCHING WITH OWNER AND OTHER TRADES BEFORE BEGINNING WORK.
8. ALL CONDUIT PENETRATIONS THROUGH FIRE-RATED WALLS AND FLOORS SHALL BE SEALED AND EQUIPPED WITH U.L. LISTED FIRE PENETRATION ASSEMBLIES TO MAINTAIN FIRE SEPARATION RATING.
9. DO NOT INSTALL ANY OUTLETS BACK TO BACK IN STUD WALLS OR DEMOUNTABLE PARTITIONS. PROVIDE MINIMUM 24" APART.
10. THE CONTRACTOR SHALL VERIFY ALL CEILING TYPES BEFORE ORDERING OF FIXTURES. ALSO VERIFY THAT ALL FEATURES CALLED FOR IN FIXTURE DESCRIPTIONS ON THE FIXTURE SCHEDULE ARE INCLUDED WITH CATALOG NUMBERS LISTED ON THE FIXTURE SCHEDULE AND ARE INCLUDED AS PART OF THE LIGHTING SUBMITTALS FOR THIS PROJECT.
11. CIRCUITRY AND CONDUIT ROUTING SHOWN ON THE PLANS IS DIAGRAMMATIC ONLY. THIS CONTRACTOR IS RESPONSIBLE FOR BECOMING COMPLETELY FAMILIAR WITH THE ARCHITECTURAL AND STRUCTURAL CONDITIONS AND LIMITATIONS IN THE BUILDING AND TO PROVIDE ALL LABOR, TOOLS AND MATERIALS REQUIRED TO PRODUCE A COMPLETELY CONCEALED INSTALLATION WHEREVER INDICATED ON THE PLANS.
12. MAINTAIN "AS-BUILT" RECORDS AT ALL TIMES, SHOWING EXACT LOCATION OF ALL UNDERGROUND AND/OR CONCEALED CONDUITS AND SERVICES INSTALLED UNDER THIS CONTRACT, INCLUDING CIRCUIT IDENTIFICATION WHERE APPLICABLE. PROVIDE OWNER WITH "AS-BUILT" DOCUMENTS AS INDICATED IN THE SPECIFICATIONS.
13. DRAWINGS INDICATE THE LOCATION OF DEVICES, FIXTURES AND EQUIPMENT AND THE CIRCUIT NUMBER AND PANEL DESIGNATION WHICH SUPPLIES THEM. THE CONTRACTOR SHALL BE RESPONSIBLE FOR COMPLETELY CONNECTING ALL ELECTRICAL DEVICES TO CIRCUITS INDICATED ON THE DRAWINGS.
14. UNLESS OTHERWISE NOTED, ALL WORK SHOWN ON DRAWINGS IS NEW AND TO BE PROVIDED AND INSTALLED UNDER THIS CONTRACT.
15. ALL EQUIPMENT GROUNDING SHALL CONFORM TO ARTICLE 250 OF THE NATIONAL ELECTRIC CODE, LATEST EDITION ADOPTED BY THE CITY.
16. ALL EXTERIOR CONDUIT INSTALLATION ABOVE GRADE INCLUDING ALL ROOF MOUNTED CONDUIT, SHALL BE GALVANIZED STEEL. COAT ALL EXPOSED THREADS WITH GALVANIZING PAINT.
17. ALL ELECTRICAL WORK SHALL BE CARRIED OUT IN ACCORDANCE WITH THE LATEST EDITION OF THE N.E.C. ADOPTED BY THE CITY, AS WELL AS STATE, AND LOCAL CODES AND REQUIREMENTS.
18. ALL CONDUIT SHALL BE CONCEALED, UNLESS OTHERWISE NOTED.
19. THE CONTRACTOR SHALL VERIFY THAT ALL POWER AND SIGNAL SERVICE PROVISIONS, INCLUDINGS PADS, CONDUITS, PULLBOXES AND CLEARANCES MEET THE UTILITY COMPANY'S REQUIREMENTS PRIOR TO INSTALLATION. CONTRACTOR SHALL ALSO VERIFY THE AVAILABLE SHORT CIRCUIT CURRENT WITH THE UTILITY COMPANY PRIOR TO RELEASE OF THE SWITCHGEAR AND DISTRIBUTION EQUIPMENT.
20. EQUIPMENT OVERLOADS AND FUSES SHALL BE PROVIDED AND INSTALLED AS PER NAME PLATE ON THE EQUIPMENT ACTUALLY PURCHASED. COORDINATE FINAL REQUIREMENTS WITH SUPPLIER/INSTALLER.
21. THE CONTRACTOR SHALL VERIFY THE DIAMETER AND BASE PATTERN, INCLUDING BASE COVER, FOR ALL POLE BASES TO AVOID OVERLAPPING COMPONENTS AT BASE.
22. THE CONTRACTOR SHALL VERIFY ALL DIMENSIONS WITH THE ARCHITECTURAL DRAWINGS PRIOR TO ROUGH-IN.
23. ALL EXIT SIGNS SHALL COMPLY WITH SECTIONS 1013-2 AND 1013-3 OF THE U.B.C.
24. ALL DIVISION 15 EQUIPMENT LOW VOLTAGE CONTROL WIRING AND RACEWAYS SHALL BE PROVIDED AND CONNECTED COMPLETE BY DIVISION 15 U.O.N.
25. COORDINATE INSTALLATION OF ALL RECESSED LIGHT FIXTURES WITH DIVISION 15 PRIOR TO INSTALLATION OF HVAC DUCTS AND SPRINKLER HEADS. ENSURE AFTER INSTALLATION OF FIXTURES THAT THERE IS NO CONTACT BETWEEN DUCTS AND FIXTURES TO AVOID VIBRATION IN FIXTURES.
26. COORDINATE LENGTHS OF WIRE WHIPS CONNECTING MASTER FIXTURES AND SLAVE FIXTURES TO ACCOMMODATE THE SPACING BETWEEN FIXTURES.
27. PROVIDE A DEDICATED NEUTRAL CONDUCTOR FOR ALL BRANCH CIRCUITS FEEDING POWER RECEPTACLES ADJACENT TO COMBINATION TEL/DATA OUTLETS AS NOTED ON THE DRAWINGS.
28. BOND ALL COLD WATER PIPING SYSTEMS, GAS PIPING SYSTEMS, AND SPRINKLER PIPING SYSTEMS TO THE BUILDING GROUNDING ELECTRODE WITH (1) #4 CU IN 3/4" CONDUIT. BOND WHEREVER THERE IS A BREAK IN THE CONTINUITY OF THESE SYSTEMS THROUGHOUT THE PROJECT.
29. DEVICE MOUNTING HEIGHTS AND LOCATION INDICATED ARE FOR INFORMATION PURPOSES ONLY. VERIFY/COORDINATE EXACT LOCATIONS WITH THE ARCHITECTURAL ELEMENTS. THE ARCHITECT SHALL APPROVE DEVICE LOCATIONS PRIOR TO ROUGH-IN.
30. COORDINATE ELECTRICAL AND TELEPHONE/DATA ROOM EQUIPMENT LAYOUTS WITH DIVISION 15 DUCTS AND SPRINKLERS TO FULLY COMPLY WITH THE NEC AND LOCAL CODE REQUIREMENTS. SUBMIT SHOP DRAWINGS OF COORDINATED ROOM LAYOUTS PRIOR TO ROUGH-IN.

LIST OF DRAWINGS

E0.1	SYMBOL LIST, GENERAL NOTES, DRAWING INDEX
E0.2	FIXTURE SCHEDULE
E0.3	TITLE 24
E1.1	SITE PLAN - ELECTRICAL
E2.1A	FLOOR PLAN - QUAD A - LIGHTING PLAN
E2.1B	FLOOR PLAN - QUAD B - LIGHTING PLAN
E2.1C	FLOOR PLAN - QUAD C - LIGHTING PLAN
E3.1A	FLOOR PLAN - QUAD A - POWER & SIGNAL PLAN
E3.1B	FLOOR PLAN - QUAD B - POWER & SIGNAL PLAN
E3.1C	FLOOR PLAN - QUAD C - POWER & SIGNAL PLAN
E4.1	ROOF PLAN - ELECTRICAL
E5.1	POWER SINGLE LINE DIAGRAM
E5.2	SINGLE LINE DIAGRAMS
E5.3	SINGLE LINE DIAGRAMS - FIRE ALARM
E6.1	SCHEDULES
E6.2	SCHEDULES
E6.3	LIGHTING CONTROL SCHEDULES & DIAGRAMS
E7.1	DETAILS
E7.2	DETAILS

SYMBOL LIST

- FIRE ALARM SYSTEM INTELLIGENT CEILING MOUNTED SMOKE DETECTOR
- FIRE ALARM SYSTEM INTELLIGENT CEILING MOUNTED HEAT DETECTOR
- FIRE ALARM SYSTEM HVAC DUCT MOUNTED SMOKE DETECTOR, PROVIDED BY DIVISION 16, INSTALLED BY DIV. 15, CONNECTED COMPLETE BY DIV. 16.
- FIRE ALARM SYSTEM END-OF-LINE RESISTOR
- EOL — FIRE ALARM SYSTEM END-OF-LINE RESISTOR.
- FSD — FIRE SMOKE DAMPER (BY OTHERS)
- FACP — FIRE ALARM CONTROL PANEL
- FAAP — FIRE ALARM ANNUNCIATOR PANEL
- SACP — SECURITY ALARM CONTROL PANEL
- WEATHERPROOF ENCLOSURE
- CONDUIT AND WIRE CONCEALED IN CEILING OR WALL
- CONDUIT AND WIRE CONCEALED IN OR UNDER SLAB OR UNDERGROUND
- CONDUIT AND WIRE RUN EXPOSED
- LOW VOLTAGE CONTROL CABLE AND CONDUIT, NUMBER OF DOTS INDICATES QUANTITY OF CABLES, ABSENCE OF DOTS INDICATES ONE CABLE
- CROSSMARKS INDICATE QUANTITY OF #12 CONDUCTORS PLUS PARITY SIZED GROUND CONDUCTOR (INCLUDED BUT NOT INDICATED), NO HASHMARKS INDICATES 2-#12 CONDUCTORS PLUS PARITY SIZED GROUND CONDUCTOR, U.O.N.
- #12 GROUND CONDUCTOR U.O.N.
- FLEXIBLE METALLIC CONDUIT
- HOMERUN TO PANELBOARD OR TERMINAL BOARD, AS NOTED ON PLANS
- COMPLETE CONNECTION OF EQUIPMENT
- CONDUIT STUBBED OUT, CAPPED AND MARKED
- CONDUIT TURNED UP
- CONDUIT TURNED DOWN
- T — TELEPHONE SYSTEM CONDUIT AND PULLWIRE, 3/4" U.O.N.
- C — COMPUTER/DATA SYSTEM CONDUIT AND PULLWIRE, 3/4" U.O.N.
- D — TELEPHONE/DATA SYSTEM CONDUIT AND PULLWIRE, 3/4" U.O.N.
- G — #4/0 COPPER GROUNDING ELECTRODE CONDUCTOR, U.O.N.
- AC-1 — MECHANICAL EQUIPMENT DESIGNATION
- FA-1 — LIGHT FIXTURE TAG
- 3/E-6 — DETAIL DESIGNATION, SEE DETAIL 3, SHEET E-6
- 1 — NUMBERED SHEET NOTE

N.E.C.	NATIONAL ELECTRIC CODE
U.O.N.	UNLESS OTHERWISE NOTED
AFF	ABOVE FINISHED FLOOR
NL	NIGHT LIGHT FIXTURE WITH BATTERY PACK, ON 24 HOURS, SEE 1/E7.2
EM	EMERGENCY LIGHT FIXTURE WITH BATTERY PACK, SWITCHABLE. SEE 1/E7.2
GFI	GROUND FAULT CURRENT INTERRUPTING TYPE RECEPTACLE
NIC	NOT IN CONTRACT
NIEC	NOT IN ELECTRICAL CONTRACT
C	CONDUIT
CU	COPPER
T	INDICATES FIXTURES ON TIMECLOCK CONTROL
P	INDICATES FIXTURES ON PHOTOCELL CONTROL
E.C.	ELECTRICAL CONTRACTOR
C.O.	CONDUIT ONLY
S.A.D.	SEE ARCHITECTURAL DRAWINGS
L.V.	LOW VOLTAGE
(E)	EXISTING
(EX)	EXISTING TO BE REMOVED
(N)	NEW
(#10)	WIRE SIZE #10 AWG FOR ALL CONDUCTORS, INCLUDING GROUND WIRE, THROUGHOUT THE COMPLETE CIRCUIT.
PNL	PANEL
MTD	MOUNTED
MLO	MAIN LUGS ONLY
TCP	MECHANICAL TIME CLOCK PANEL PROVIDED BY DIV. 15.
TVSS	TRANSIENT VOLTAGE SURGE SUPPRESSOR

- M — UTILITY METER
- CTS — CURRENT TRANSFORMERS
- 30A 3P — CIRCUIT BREAKER. NUMBER INDICATES 30A 3-POLE
- 1504N — FEEDER SIZE. SEE POWER SINGLE LINE DIAGRAMS
- ACCESS PANEL
- = FEEDER DUCT JUNCTION HEADER
- = FLOOR DUCT SYSTEM
- ACTIVATED POWER/SIGNAL BOX
- NON-ACTIVATED POWER/SIGNAL BOX
- = FLOOR DUCT OPENING AND STUB-UP

SYMBOL LIST

- COMBINATION MAGNETIC MOTOR STARTER, MOTOR CIRCUIT PROTECTOR AND FUSIBLE DISCONNECT. SEE 13/E7.1
- MAGNETIC MOTOR STARTER, SEE 13/E7.1
- MANUAL MOTOR STARTER WITH OVERLOAD PROTECTION
- MOTOR OUTLET WITH FLEXIBLE CONDUIT CONNECTION
- T — TRANSFORMER
- CONCRETE PULLBOX, SIZE AS REQUIRED OR SHOWN
- COPPER GROUND ROD - 3/4"⌀ x 10'-0" LONG
- CEILING MOUNTED JUNCTION BOX. PROVIDE BLANK DEVICE PLATE IN FINISHED AREAS.
- WALL MOUNTED JUNCTION BOX, UP 18" U.O.N. PROVIDE BLANK DEVICE PLATE IN FINISHED AREAS.
- J — JUNCTION BOX FLUSH FLOOR MOUNTED. PROVIDE BLANK DEVICE PLATE IN FINISHED AREAS.
- 15A 3PG 125V SINGLE RECEPTACLE, UP 18" U.O.N.
- 15A 3PG 125V DUPLEX RECEPTACLE, UP 18" U.O.N.
- 15A 3PG 125V DUPLEX RECEPTACLE, SWITCHED, UP 18" U.O.N.
- 15A 3PG 125V DOUBLE DUPLEX RECEPTACLE, UP 18" U.O.N.
- 15A 3PG 125V DUPLEX RECEPTACLE, WEATHERPROOF, UP 18" U.O.N.
- GFI — 15A 3PG 125V DUPLEX RECEPTACLE, GROUND FAULT CIRCUIT INTERRUPTER TYPE, UP 18" U.O.N.
- IG — 15A 3PG 125V DUPLEX RECEPTACLE, ISOLATED GROUND TYPE, UP 18" U.O.N.
- 15A 3PG 125V DUPLEX RECEPTACLE, UP 42" U.O.N.
- T — 15A 3PG 125V TAMPER RESISTANT DUPLEX RECEPTACLE, UP 18" U.O.N.
- 20A 3PG 125V DUPLEX RECEPTACLE, WEATHERPROOF, UP 18" U.O.N.
- GFI — 20A 3PG 125V DUPLEX RECEPTACLE, GROUND FAULT CIRCUIT INTERRUPTER TYPE, UP 18" U.O.N.
- 20A 3PG 125V DUPLEX RECEPTACLE, UP 42" U.O.N.
- T — 20A 3PG 125V TAMPER RESISTANT DUPLEX RECEPTACLE, UP 18" U.O.N.
- 20A 3PG 125V DUPLEX RECEPTACLE, UP 18" U.O.N.
- 20A 3PG 125V DOUBLE DUPLEX RECEPTACLE, UP 18" U.O.N.
- 20A 3PG 125V SINGLE TWISTLOCK RECEPTACLE, NEMA L5-20R, UP 18" U.O.N.
- FLUSH IN FLOOR OUTLET BOX WITH QUANTITY OF 20A 3PG 125V DUPLEX RECEPTACLES AS INDICATED ON PLANS
- FLUSH CEILING MTD. OUTLET BOX WITH 20A 3PG 125V DUPLEX RECEPTACLE.
- SPECIAL RECEPTACLE AS INDICATED ON PLANS
- 50A, 280V STOVE RECEPTACLE "UP 8" U.O.N.
- THERMOSTAT, PROVIDED & INSTALLED BY DIV. 15, CONNECTED COMPLETE BY DIV. 16
- SURFACE METAL RACEWAY WITH RECEPTACLES AS INDICATED ON PLANS
- SEPARATE POWER AND TELE/DATA WALL BOXES TO FURNITURE PANEL, UP 6" U.O.N.
- TERMINAL MOUNTING BACKBOARD, 3/4" FIRE TREATED PLYWOOD, DIMENSIONS AS NOTED ON PLANS, PAINT TO MATCH ADJACENT WALL SURFACE.
- TELEPHONE OUTLET, UP 18" U.O.N. SEE 1/E5.2
- W — TELEPHONE OUTLET, UP 48" U.O.N. SEE 1/E5.2
- COMBINED TELEPHONE/DATA OUTLET, UP 18" U.O.N. SEE 1/E5.2
- W — COMBINED TELEPHONE/DATA OUTLET, UP 42" U.O.N. SEE 1/E5.2
- IC — INTERCOM HANDSET, UP 48", U.O.N.
- 120VOLT WALL MOUNTED CLOCK OUTLET. G.E. #4234-2 OR EQUAL. CONNECT TO ADJACENT RECEPTACLE CIRCUIT U.O.N. SEE ARCHITECTURAL DRAWING FOR MOUNTING HEIGHTS.
- TV — WALL MOUNTED CABLE TV OUTLET, UP 18" U.O.N. SEE 1/E5.2
- TV — FLUSH FLOOR MOUNTED CABLE TV OUTLET, U.O.N. WITH 3/4" CONDUIT HOMERUN TO TELEPHONE ROOM.
- S — FLUSH WALL MOUNTED INDOOR PUBLIC ADDRESS SPEAKER UP 7'-0", U.O.N. (VERIFY EXACT MOUNTING HEIGHT PRIOR TO ROUGH-IN).
- S — FLUSH WALL MOUNTED OUTDOOR WEATHERPROOF PUBLIC ADDRESS SPEAKER, HEIGHT AS NOTED ON PLANS. (VERIFY EXACT MOUNTING HEIGHT PRIOR TO ROUGH-IN).
- S — FLUSH CEILING MOUNTED SIGNAL SYSTEM PUBLIC ADDRESS SPEAKER
- S — J-BOX FOR SURFACE MOUNTED SIGNAL SYSTEM PUBLIC ADDRESS SPEAKER
- M — WALL MOUNTED MICROPHONE OUTLET, UP 42" U.O.N.
- V — WALL MOUNTED VOLUME CONTROL J-BOX, UP 48" U.O.N. (4" SQ. BOX WITH SINGLE GANG RING & BLANK COVER PLATE)
- F — FIRE ALARM SYSTEM INTELLIGENT MANUAL PULL STATION, UP 48" U.O.N.
- S — FIRE ALARM SYSTEM HORN/STROBE, UP 80" U.O.N. 110cd U.O.N.
- S — WEATHERPROOF FIRE ALARM SYSTEM HORN/STROBE UP 10'-6" U.O.N. 110cd U.O.N.
- S — FIRE ALARM SYSTEM STROBE, UP 80" U.O.N.
- M — FIRE ALARM ADDRESSABLE MONITOR MODULE
- C — FIRE ALARM SYSTEM ADDRESSABLE CONTROL MODULE
- B — SPRINKLER FLOW ALARM (PROVIDE BY DIV. 15). CONNECT COMPLETE VIA WATER FLOW SWITCH AUX. CONTACTS.
- FSD — FIRE SMOKE DAMPER ADDRESSABLE MONITOR MODULES (1) TROUBLE (1) ALARM
- DH — DOOR HOLDER
- FS — FIRE ALARM SYSTEM SPRINKLER FLOW SWITCH. PROVIDE MONITOR MODULE.
- TS — FIRE ALARM SYSTEM SPRINKLER VALVE SUPERVISORY SWITCH. PROVIDE MONITOR MODULE.

SYMBOL LIST

- RECESSED 2'x4' FLUORESCENT FIXTURE WITH 3-#12 U.O.N. IN 48" OF FLEXIBLE CONDUIT TO JUNCTION BOX ABOVE, "MASTER" OR "STAND-ALONE" UNIT. SEE 9/E7.2
- RECESSED 2'x4' FLUORESCENT FIXTURE, "MASTER" OR "STAND-ALONE" UNIT, WITH JUNCTION BOX MOUNTED AT FIXTURE. SEE 9/E7.2
- RECESSED 2'x4' 3-LAMP "SLAVE" FIXTURE FED FROM ADJACENT "MASTER" FIXTURE VIA FACTORY INSTALLED WIRING "WHIP". SEE 9/E7.2
- RECESSED 2'x2' FLUORESCENT FIXTURE WITH 3-#12 U.O.N. IN 48" OF FLEXIBLE CONDUIT TO JUNCTION BOX ABOVE, "MASTER" OR "STAND-ALONE" UNIT. SEE 9/E7.2
- RECESSED 2'x2' FLUORESCENT FIXTURE, "MASTER" OR "STAND-ALONE" UNIT, WITH JUNCTION BOX MOUNTED AT FIXTURE. SEE 9/E7.2
- RECESSED 2'x2' 3-LAMP "SLAVE" FIXTURE FED FROM ADJACENT "MASTER" FIXTURE VIA FACTORY INSTALLED WIRING "WHIP". SEE 9/E7.2
- INDICATES EMERGENCY OR NITELIGHT FIXTURE WITH QUANTITY OF EMERGENCY BALLAST AS DESIGNATED ON PLANS AND FIXTURE SCHEDULE. SEE 1/E7.2
- PENDANT MOUNTED FLUORESCENT UPLIGHT FIXTURE. SEE 12/E7.2
  - INDICATES AIRCRAFT CABLE SUPPORT POINT
  - INDICATES PENDANT ELECTRICAL FEED POINT
- SURFACE CEILING, WALL OR COVE MOUNTED FLUORESCENT FIXTURE (FOR UNDER-COUNTER FIXTURES, SEE 11/E7.2)
- SURFACE OR PENDANT MOUNTED FLUORESCENT STRIP FIXTURE
- SURFACE CEILING OR PENDANT MOUNTED COMPACT FLUORESCENT, H.I.D. OR INCANDESCENT FIXTURE
- COMPACT FLUORESCENT, H.I.D. OR INCANDESCENT RECESSED DOWNLIGHT FIXTURE
- COMPACT FLUORESCENT, H.I.D. OR INCANDESCENT RECESSED WALL-WASH FIXTURE
- WALL MOUNTED COMPACT FLUORESCENT, H.I.D. OR INCANDESCENT FIXTURE
- POLE MOUNTED H.I.D. PARKING LOT LIGHTING FIXTURE
- POST-TOP WALK-WAY LIGHTING FIXTURE, ARROW INDICATES DIRECTION OF OPTICS
- EXTERIOR H.I.D. BOLLARD TYPE FIXTURE
- FLUSH-IN-GROUND H.I.D. UPLIGHT
- FLUSH-IN-GROUND H.I.D. WALL-WASH UPLIGHT
- WALL MOUNTED EXIT SIGN WITH INTEGRAL EMERGENCY BATTERY BACK-UP WHERE NOTED ON FIXTURE SCHEDULE, ARROWS AS NOTED ON PLANS.
- CEILING MOUNTED EXIT SIGN WITH INTEGRAL EMERGENCY BATTERY BACK-UP WHERE NOTED ON FIXTURE SCHEDULE, ARROWS AS NOTED ON PLANS.
- WALL MOUNTED SLAVE EXIT SIGN
- WALL MOUNTED EMERGENCY BATTERY EGRESS LIGHTING FIXTURE WITH NUMBER OF ADJUSTABLE LOW VOLTAGE INCANDESCENT LAMP HEADS INDICATED.
- S_a — LINE VOLTAGE SINGLE POLE TOGGLE SWITCH, LETTER ADJACENT INDICATES RESPECTIVE ZONE CONTROLLED, UP 48" U.O.N.
- S_2 — LINE VOLTAGE TWO POLE TOGGLE SWITCH, UP 48" U.O.N.
- S_3 — LINE VOLTAGE THREE-WAY TOGGLE SWITCH, UP 48" U.O.N.
- S_p — LINE VOLTAGE TOGGLE SWITCH WITH PILOT LIGHT, LIGHT IS ON WHEN CIRCUIT IS OPEN, UP 48" U.O.N.
- S_m — LINE VOLTAGE MOTOR RATED TOGGLE SWITCH
- $K^{S}a$ — LINE VOLTAGE KEY OPERATED TOGGLE SWITCH, UP 48" U.O.N.
- S_a — LOW VOLTAGE MOMENTARY CONTACT SWITCH - SEE LOW VOLTAGE RELAY SCHEDULE, LOWER CASE LETTER ADJACENT INDICATES RESPECTIVE ZONE CONTROLLED, UP 48" U.O.N.
- S_K — LOW VOLTAGE MOMENTARY CONTACT KEYED SWITCH, UP 48" U.O.N.
- D^a 1000W — WALL MOUNTED LINE VOLTAGE INCANDESCENT SLIDE DIMMER, RATING AS REQUIRED BY INDIVIDUAL LOAD; LOWER CASE LETTER ADJACENT INDICATES LIGHTING ZONE CONTROLLED, UP 48" U.O.N.
- DL_b — WALL MOUNTED LOW VOLTAGE INCANDESCENT SLIDE DIMMER SWITCH, RATING AS REQUIRED BY INDIVIDUAL LOAD; LOWER CASE LETTER ADJACENT INDICATES LIGHTING ZONE CONTROLLED, UP 48" U.O.N.
- DF_b — WALL MOUNTED FLUORESCENT DIMMER SWITCH, RATING AS REQUIRED BY INDIVIDUAL LOAD; LOWER CASE LETTER ADJACENT INDICATES LIGHTING ZONE CONTROLLED, UP 48" U.O.N. PROVIDE 3-WAY TYPE IN ROOM 124.
- WALL SWITCH MOUNTED OCCUPANCY SENSOR.
- c.l.g. — CEILING MOUNTED OCCUPANCY SENSOR.
- P — OCCUPANCY SENSOR POWER PACK MOUNTED IN CONCEALED ACCESSIBLE LOCATION
- SL — OCCUPANCY SENSOR SLAVE PACK MOUNTED IN CONCEALED ACCESSIBLE LOCATION.
- MAIN SWITCHBOARD, DISTRIBUTION PANEL OR MOTOR CONTROL CENTER
- FLUSH MOUNTED PANELBOARD, 6'-6" TO TOP
- SURFACE MOUNTED PANELBOARD, 6'-6" TO TOP, SEE 6/E7.2 TYPICAL
- FLOOR OUTLET SEE 4/E7.1
- FUSED EQUIPMENT DISCONNECT SWITCH WITH FUSE SIZE AS RECOMMENDED BY EQUIPMENT MANUFACTURER
- MOTOR DISCONNECT SWITCH; HORSEPOWER RATED, NON FUSED.
- SECURITY DOOR CONTACT. STUB CONDUIT DOWN INTO DOOR JAM HEADER.
- M — CEILING SECURITY MOTION SENSOR - INSTALL J-BOX ABOVE ACCESSIBLE CEILING WITH CONDUIT. SEE FLOOR PLANS.
- K — SECURITY KEY PAD, UP 54" U.O.N. WITH 3/4" CONDUIT TO ROOM 120.

FIELD PAOLI

Architecture
1045 Sansome St.
Suite 206
San Francisco
California, 94111
Tel. 415. 788. 6606
Fax 415. 788. 6650

SARATOGA COMMUNITY LIBRARY

SANTA CLARA COUNTY LIBRARY

13650 Saratoga Avenue
Saratoga, California 95070

O'MAHONY & MYER
ELECTRICAL and LIGHTING DESIGN
4340 REDWOOD HWY, SUITE 245
SAN RAFAEL, CALIFORNIA 94903
(415) 492-0420/FAX (415) 479-9662
www.ommconsulting.com

DATE: OCTOBER 26, 2001

REVISIONS: BID SET

SYMBOL LISTS, GENERAL NOTES, DRAWING INDEX

SCALE	NONE
DRAWN BY	TV/OO
CHECKED BY	NT/PC
JOB NO.	200095

PHASE - 2

SHEET NO. **E0.1**

All drawings and written material appearing herein constitute the original and unpublished work of the architect and the same may not be duplicated, used, or disclosed without the written consent of the architect © Field Paoli

FILE: P:\2000\SARATOGA_LIBRARY-200095\CAD\E__01-SLb.dwg.DWG 11/01/01 at 15:52

SARATOGA_LIBRARY_200095

(USING ARIAL.SHX FOR MISSING AlbertusExtraBold FONT)

FILE: P:\2000\SARATOGA_LIBRARY-200095\CAD\E__02-SLib.dwg.DWG 01/28/02 at 15:02

FIXTURE SCHEDULE

ME-1	DESCRIPTION:	Ground mounted metal halide accent light with one-piece cast bronze lens ring, cast bronze half glare shield, slightly crowned clear tempered glass lens with silicone u-channel lens gasket, molded composite housing, hydroformed specular alzak reflector with 360 degree rotation, narrow flood distribution, anti-siphon barriers on all wiring, quick optical system disconnect.
	MANUFACTURER:	Kim #LTV50-NF-50MH277-HS50-GM50
	BALLAST:	Electronic
	LAMPS:	(1) MH50/U
	WATTAGE:	63
	VOLTAGE:	277
	REMARKS:	Tree uplight.
MF-1	DESCRIPTION: △1 △2	Post top mounted metal halide area light with flared hood and glass refractor. Black finish with satin natural copper hood. Nominal fixture size: 22.5" dia. x 24"h. IES type III optics. 12 foot bi-post cast aluminum pole with base cover, black finish. Extended 4 foot anchor bolts required, fully galvanized, double nut, double washer, 1/2" x 48".
	MANUFACTURER: △2	Architectural Area Lighting #SP2-FLR-GR3-50MH-BLK-COP and #2P12-BLK and extended 4 ft. anchor bolts.
	BALLAST:	Electronic
	LAMPS:	(1) MH50/U
	WATTAGE:	75
	VOLTAGE:	277
	REMARKS:	
MG-1	DESCRIPTION:	Bracket arm mounted metal halide area light with flared hood, glass refractor, color per architect. Nominal size: 22.5" dia. x 24"h. IES type III optics.
	MANUFACTURER:	Architectural Area Lighting #SP2-FLR-GR3-50MH-COLOR-HOOD FINISH
	BALLAST:	Electronic
	LAMPS:	(1) MH50/U
	WATTAGE:	63
	VOLTAGE:	277
	REMARKS:	
MH-1	DESCRIPTION:	Wall mounted metal halide wall sconce, die cast aluminum housing, gasketed & hinged door frame, tepmered glass lens, specular alzak reflector, wet location label, abrasion resistant finish.
	MANUFACTURER:	McPhilben #101-XX-XXMH-277-Finish
	BALLAST:	Electronic
	LAMPS:	(1) MH/
	WATTAGE:	0
	VOLTAGE:	277
	REMARKS:	Verify (1) Lamp, (2) Finish, (3) Distribution
MJ-1	DESCRIPTION:	Recessed metal halide down light with nominal 6" aperture, specular alzak aluminum reflector, self-flanged trim, steel mounting brackets.
	MANUFACTURER:	Lightolier #DL6P-CLP-DL6P-35HA
	BALLAST:	Electronic
	LAMPS:	(1) 35W PAR20/MH
	WATTAGE:	44
	VOLTAGE:	277
	REMARKS:	
MJ-2	DESCRIPTION:	Similar to type MJ-1, except adjustable accent light with die formed steel housing with aluminum covers, die cast aluminum and steel yoke lamp holder assembly, 40 degree adjustability.
	MANUFACTURER:	Lightolier #PAA6P30-CLP30-PAA6P30-35H
	BALLAST:	Electronic
	LAMPS:	(1) 35W PAR20/MH
	WATTAGE:	44
	VOLTAGE:	277
	REMARKS:	
MK-1	DESCRIPTION:	Pendant metal halide light with graduated aluminum reflectors, baked white enamel finish, nominal 26" diameter x 20" height, with ballast mounted in fixture canopy.
	MANUFACTURER:	Louis Poulsen #PH6-184-Metal Halide-Canopy Ballast
	BALLAST:	Electronic
	LAMPS:	(1) MHC100/C/U/M/3K
	WATTAGE:	118
	VOLTAGE:	120
	REMARKS:	
ML-1	DESCRIPTION:	Surface mounted metal halide wall washer, extruded aluminum reflector with die-cast end plates, die-cast ballast housing, backplate/heat shield, and cutoff visor. Semi-gloss white finish.
	MANUFACTURER:	Elliptipar #M402-150G-W-02-B-V00
	BALLAST:	HPF
	LAMPS:	(1) CDM150/T6/8
	WATTAGE:	180
	VOLTAGE:	277
	REMARKS:	Mount fixtures at 6'-0" on center. Center each fixture between the exposed joists below the skylight.

FIXTURE SCHEDULE

FY-1	DESCRIPTION:	Wall mounted fluorescent direct/indirect luminaire with exttruded aluminum housing, die cast end plates, perforated metal diffuser panels with opal acrylic diffuser inlay, matte silver aluminum parabolic louver blades, continuous back plate mounting, finish to be selected.
	MANUFACTURER:	Zumtobel #VMW-2328-X-L-2
	BALLAST:	Electronic
	LAMPS:	(2) F32T8/830
	WATTAGE:	59
	VOLTAGE:	277
	REMARKS:	
FY-2	DESCRIPTION:	Similar to type FY-1, except cable mounted.
	MANUFACTURER:	Zumtobel #VMS-2328-X-X-L-2-CX-X
	BALLAST:	Electronic
	LAMPS:	(2) F32T8/830
	WATTAGE:	59
	VOLTAGE:	277
	REMARKS:	Verify: (1) Continuous row lengths, (2) Finish, (3) Cable lengths.
FZ-1	DESCRIPTION:	Recessed 2'x2' fluorescent fixture with white post painted steel housing, low iridescent semi-specular 12-cell parabolic louvers, upper anodized aluminum specular reflector, suitable for lay-in ceiling.
	MANUFACTURER:	Columbia #HC22-240TTG-LD34-S-EBTT277-PAF
	BALLAST:	Electronic
	LAMPS:	(2) F40W/RS/30
	WATTAGE:	86
	VOLTAGE:	277
	REMARKS:	
FZ-2	DESCRIPTION:	Similar to type FZ-1, except suitable for gyp-board ceiling.
	MANUFACTURER:	Columbia #HC22-240TTF-LD34-S-EBTT277-PAF
	BALLAST:	Electronic
	LAMPS:	(2) F40W/RS/30
	WATTAGE:	86
	VOLTAGE:	277
	REMARKS:	
MA-1	DESCRIPTION:	Pole mounted metal halide area light with one piece die-cast aluminum housing with integral arm, single piece die-cast and hinged aluminum lens frame, clear flat tempered glass lens with one piece moisture gasket, sealed anodized aluminum reflector, fade and abrasion resistant electrostatically applied powder coat finish, color per architect. Nominal size: 18"w x 31.5"l x 6.5"d. IES type IV optics. Nominal 25 foot straight square aluminum pole.
	MANUFACTURER:	Gardco #G18-1-4XL-175MH-277-FINISH
	BALLAST:	Electronic
	LAMPS:	(1) MH175/U
	WATTAGE:	210
	VOLTAGE:	277
	REMARKS:	Pole # SSA5-25M-FINISH TO MATCH FIXTURE HEAD.
MA-2	DESCRIPTION:	Similar to type MA-1, except with IES type III optics.
	MANUFACTURER:	Gardco #G18-1-3XL-175MH-277-FINISH
	BALLAST:	Electronic
	LAMPS:	(1) MH175/U
	WATTAGE:	210
	VOLTAGE:	277
	REMARKS:	Pole # SSA5-25M-FINISH TO MATCH FIXTURE HEAD.
MA-3	DESCRIPTION:	Similar to type MA-1, except with twin heads at 180 degrees.
	MANUFACTURER:	Gardco #G18-2(180)-3XL-175MH-277-FINISH
	BALLAST:	Electronic
	LAMPS:	(2) MH175/U
	WATTAGE:	420
	VOLTAGE:	277
	REMARKS:	Pole # SSA5-25M-FINISH TO MATCH FIXTURE HEAD.
MA-4	DESCRIPTION:	Similar to type MA-1, except with twin heads at 90 degrees.
	MANUFACTURER:	Gardco #G18-2(90)-3XL-175MH-277-FINISH
	BALLAST:	Electronic
	LAMPS:	(2) MH175/U
	WATTAGE:	420
	VOLTAGE:	277
	REMARKS:	Pole # SSA5-25M-FINISH TO MATCH FIXTURE HEAD.
MB-1	DESCRIPTION:	Pole mounted metal halide area light with one piece die-cast aluminum housing with integral arm, single piece die-cast and hinged aluminum lens frame, clear flat tempered glass lens with one piece moisture gasket, sealed anodized aluminum reflector, fade and abrasion resistant electrostatically applied powder coat finish, color per architect. nominal size: 13.5"w x 22.5"l x 5"d. IES type II optics. Nominal 12 foot straight square aluminum pole.
	MANUFACTURER:	Gardco #G13-1-2XL-50MH-277-FINISH
	BALLAST:	Electronic
	LAMPS:	(1) MH50/U
	WATTAGE:	63
	VOLTAGE:	277
	REMARKS:	Pole # SSA4-12M-FINISH TO MATCH FIXTURE HEAD.
MC-1	DESCRIPTION: △1	Metal halide bollard light with die-cast aluminum housing, aluminum shaft, hydro-formed refractor, stepped body baffle. Custom color finish as selected by Landscape Architect.
	MANUFACTURER:	Kim Lighting #GEM1-70MH277-CC-P
	BALLAST:	Electronic
	LAMPS:	(1) MH70/U
	WATTAGE:	88
	VOLTAGE:	277
	REMARKS:	
MD-1	DESCRIPTION:	Ground mounted metal halide wall wash with one-piece cast bronze lens ring, cast bronze half glare shield, slightly crowned clear tempered glass lens with silicone u-channel lens gasket, molded composite housing, hydroformed specular alzak reflector with 360 degree rotation, wall wash distribution, anti-siphon barriers on all wiring, quick optical system disconnect.
	MANUFACTURER:	Kim #LTV52-WW-50MH277-HS50-GM50
	BALLAST:	Electronic
	LAMPS:	(1) MH50/U
	WATTAGE:	63
	VOLTAGE:	277
	REMARKS:	

FIXTURE SCHEDULE

FM-2D	DESCRIPTION:	Similar to type FM-1, except nominal 12' overall length, surface ceiling mounted.
	MANUFACTURER:	Elliptipar #F144-T155(Mod)-S-22-2-00
	BALLAST:	Electronic
	LAMPS:	(3) F54T5/830/HO
	WATTAGE:	176
	VOLTAGE:	277
	REMARKS:	Verify (1) Style, (2) Lamp & reflector config, (3) Mounting, (4) Finish, (5) Mod - provide number of fixtures needed for overall length.
FN-1	DESCRIPTION:	Wall mounted metal halide accent light with machined aluminum housing, adjustable and lockable horizontal aiming, sealed optical compartment, clear tempered glass lens, polyester powder coat finish, nominal 3" diameter x 8" long. Includes machined aluminum ballast canopy, finish as selected by architect.
	MANUFACTURER:	B-K Lighting #EV-0-Finish-9-B-PC35-277V
	BALLAST:	Standard
	LAMPS:	(1) 35W/PAR20/M/FL
	WATTAGE:	42
	VOLTAGE:	277
	REMARKS:	Verify Satin or Wrinkle finish: Bronze, Black, White (gloss), Aluminum, Verde.
FP-1	DESCRIPTION:	Recessed compact fluorescent down light with iridescconece suppressed and self trim reflector, nominal 8" aperture.
	MANUFACTURER:	Prescolite #CFT832EB-STF80x (-EM, for emergency units)
	BALLAST:	Electronic
	LAMPS:	(1) CFTR32W/30
	WATTAGE:	34
	VOLTAGE:	277
	REMARKS:	Provie with emergency battery pack where indicated on the plans.
FQ-1	DESCRIPTION:	Recessed compact fluorescent wall washer with iridescconece suppressed and self trim reflector, prismatic spread lens, nominal 8" aperture.
	MANUFACTURER:	Prescolite #CFTW832EB-STF812(-EM, for emergency units)
	BALLAST:	Electronic
	LAMPS:	(1) CFTR32W/30
	WATTAGE:	34
	VOLTAGE:	277
	REMARKS:	Provie with emergency battery pack where indicated on the plans.
FR-1	DESCRIPTION:	Cable mounted direct/indirect fluorescent fixture with 4-4'long section assembled in a square configuration with optional corner brackets, extruded aluminum housing, die cast aluminum end plates, 2-lamp cross section, matte aluminum louvers, tandem aircraft suspension cables, emergency ballasts as shown on plans.
	MANUFACTURER:	Zumtobel #SID-CBL-C-2/32-4'-C-S2-DC-IC-(PC)-Cable length-(4) 90 deg. connectors
	BALLAST:	Electronic
	LAMPS:	(8) F32T8/830
	WATTAGE:	236
	VOLTAGE:	277
	REMARKS:	Verify: (1) Locations and quantities of power cords(PC) - see lighting plans, (2) Quantity and location of emergency ballasts - option 'EM2", (3) Cable lengths.
FR-2	DESCRIPTION:	Cable mounted direct/indirect fluorescent fixture with extruded aluminum housing, die cast aluminum end plates, 2-lamp cross section, matte aluminum louvers, tandem aircraft suspension cables, emergency ballasts as shown on plans.
	MANUFACTURER:	Zumtobel #SID-CBL-C-2/32-X-C-S2-DC-IC-(PC)-Cable length-X-X
	BALLAST:	Electronic
	LAMPS:	(2) F32T8/830
	WATTAGE:	59
	VOLTAGE:	277
	REMARKS:	Verify: (1) Continuous row lengths - see lighting plans, (2) Locations and quantities of power cords (PC) - see lighting plans, (3) Quantity and location of emergency ballasts - option 'EM2", (4) Cable lengths.
FS-1	DESCRIPTION:	Recessed fluorescent 2x4 with 2-lamp cross-section, post painted steel housing, flush aluminum door frame, prismatic acrylic pattern 12 lens, spring loaded door latches.
	MANUFACTURER:	Columbia #SPS24-232X-FAA12-EB8-277
	BALLAST:	Electronic
	LAMPS:	(2) F32T8/835
	WATTAGE:	59
	VOLTAGE:	277
	REMARKS:	
FV-1	DESCRIPTION:	Semi-recessed fluorescent wall washer with extruded aluminum housing and clear anodized specular reflector, painted trim.
	MANUFACTURER:	Elliptipar #F209-L155-L-XX-2-000
	BALLAST:	Electronic
	LAMPS:	(1) FT55W/2G11/30
	WATTAGE:	42
	VOLTAGE:	277
	REMARKS:	Verify : (1) Finish.
FW-1	DESCRIPTION:	Recessed fluorescent step light with one piece die cast aluminum housing and face plate, single piece silicone gasket, prismatic glass lens, integral nicad emergency battery, wet location label, abrasion and fade resistant finish, color to be specified.
	MANUFACTURER:	McPhilben #942EM-D/C-213TFE-XX-277-Finish
	BALLAST:	Electronic
	LAMPS:	(2) CFT13W/830
	WATTAGE:	29
	VOLTAGE:	277
	REMARKS:	
FX-1	DESCRIPTION:	Table mounted compact fluorescent light with graduated aluminum reflectors, baked white enamel finish, weighted base and support colum finished in chrome plated steel, nominal 18" diameter primary reflector, 12" base and nominal 22" height.
	MANUFACTURER:	Poulsen #PH4/3-237-TL-FIXED/BASE-Compact Fluorescent
	BALLAST:	Electronic
	LAMPS:	(1) CFTR32W
	WATTAGE:	34
	VOLTAGE:	120
	REMARKS:	

FIXTURE SCHEDULE

FH-3	DESCRIPTION:	Similar to type F-1, except 96" long.
	MANUFACTURER:	Wellmade #183-A-248-2T8-SSB
	BALLAST:	Electronic
	LAMPS:	(4) F32T8/835
	WATTAGE:	118
	VOLTAGE:	277
	REMARKS:	Verify (1) mounting height.
FH-4	DESCRIPTION:	Similar to type F-1, except 96" long, 1-lamp cross-section.
	MANUFACTURER:	Wellmade #183-A-148-2T8-SSB
	BALLAST:	Electronic
	LAMPS:	(2) F32T8/835
	WATTAGE:	59
	VOLTAGE:	277
	REMARKS:	Verify (1) mounting height.
FH-5	DESCRIPTION:	Similar to type F-1, except 36" long.
	MANUFACTURER:	Wellmade #183-A-236T8-SSB
	BALLAST:	Electronic
	LAMPS:	(2) F25T8/835
	WATTAGE:	45
	VOLTAGE:	277
	REMARKS:	Verify (1) mounting height.
FJ-1	DESCRIPTION:	Surface mounted fluorescent strip light, nominal 48" long x 4.5" square, extruded aluminum housing, die cast end plates, 1-lamp cross-section.
	MANUFACTURER:	Wellmade #204-148T8-SSB
	BALLAST:	Electronic
	LAMPS:	(1) F32T8/835
	WATTAGE:	31
	VOLTAGE:	277
	REMARKS:	
FJ-2	DESCRIPTION:	Similar to type FJ-1, except nominal 96" long.
	MANUFACTURER:	Wellmade #204-148-2T8-SSB
	BALLAST:	Electronic
	LAMPS:	(2) F32T8/835
	WATTAGE:	59
	VOLTAGE:	277
	REMARKS:	
FJ-3	DESCRIPTION:	Similar to type FJ-1, except 2-lamp cross section.
	MANUFACTURER:	Wellmade #204-248T8-SSB
	BALLAST:	Electronic
	LAMPS:	(2) F32T8/835
	WATTAGE:	59
	VOLTAGE:	277
	REMARKS:	
FJ-4	DESCRIPTION:	Similar to type FJ-1, except nominal 96" long, 2-lamp cross section.
	MANUFACTURER:	Wellmade #204-248-2T8-SSB
	BALLAST:	Electronic
	LAMPS:	(4) F32T8/835
	WATTAGE:	118
	VOLTAGE:	277
	REMARKS:	
FK-1	DESCRIPTION:	Fluorescent bollard with die-cast aluminum housing, aluminum shaft, hydro-formed reflector, fluted glass refractor, stepped body baffle, Bodine #B50 Emergency Ballast; △1 custom color paint finish as selected by Landscope Architect.
	MANUFACTURER:	Kim #GEM1C-32PL277-CC-P-EM
	BALLAST:	Electronic/Emergency
	LAMPS:	(1) CFTR32W/30
	WATTAGE:	34
	VOLTAGE:	277
	REMARKS:	
FL-1	DESCRIPTION:	Wall mounted fluorescent wall sconce, die cast aluminum housing, gasketed & hinged door frame, tepmered glass lens, specular alzak reflector with medium throw optics, integral battery pack, wet location label, abrasion resistant finish.
	MANUFACTURER:	McPhilben #10xEM-MT-142TRF-277-Finish
	BALLAST:	Electronic
	LAMPS:	(1) CFTR42W/30
	WATTAGE:	44
	VOLTAGE:	277
	REMARKS:	Verify (1) Style, (2) Finish.
FM-1	DESCRIPTION:	Cantilevered linear fluorescent wall washer with extruded aluminum housing and specular reflector, 24" long aluminum cantilever, die cast end plates, remote ballast, nominal 12' overall length.
	MANUFACTURER:	Elliptipar #F144-T155-X-22-2-XX-0-12' length-V4-2224 (24" cantilever) 0
	BALLAST:	Electronic
	LAMPS:	(3) F54T5/830/HO
	WATTAGE:	176
	VOLTAGE:	277
	REMARKS:	Verify (1) Style, (2) Lamp & reflector config, (3) Mounting, (4) Finish
FM-2	DESCRIPTION:	Similar to type FM-1, except nominal 28' overall length.
	MANUFACTURER:	Elliptipar #F144-T155-X-22-2-XX-0-28' length-V4-2224 (24" cantilever) 0
	BALLAST:	Electronic
	LAMPS:	(7) F54T5/830/HO
	WATTAGE:	410
	VOLTAGE:	277
	REMARKS:	Verify (1) Style, (2) Lamp & reflector config, (3) Mounting, (4) Finish.
FM-2A	DESCRIPTION:	Similar to type FM-1, except nominal 16' overall length, surface ceiling mounted.
	MANUFACTURER:	Elliptipar #F144-T155(Mod)-S-22-2-00
	BALLAST:	Electronic
	LAMPS:	(4) F54T5/830/HO
	WATTAGE:	234
	VOLTAGE:	277
	REMARKS:	Verify (1) Style, (2) Lamp & reflector config, (3) Mounting, (4) Finish, (5) Mod - provide number of fixtures needed for overall length.
FM-2B	DESCRIPTION:	Similar to type FM-1, except nominal 8' overall length, surface ceiling mounted.
	MANUFACTURER:	Elliptipar #F144-T255-S-22-2-00
	BALLAST:	Electronic
	LAMPS:	(2) F54T5/830/HO
	WATTAGE:	117
	VOLTAGE:	277
	REMARKS:	Verify (1) Style, (2) Lamp & reflector config, (3) Mounting, (4) Finish.
FM-2C	DESCRIPTION:	Similar to type FM-1, except nominal 4' overall length, surface ceiling mounted.
	MANUFACTURER:	Elliptipar #F144-T155-S-22-2-00
	BALLAST:	Electronic
	LAMPS:	(1) F54T5/830/HO
	WATTAGE:	59
	VOLTAGE:	277
	REMARKS:	Verify (1) Style, (2) Lamp & reflector config, (3) Mounting, (4) Finish.

FIXTURE SCHEDULE

FD-1A	DESCRIPTION:	Cable mounted spun matte anodized decorative aluminum compact fluorescent pendant fixture, 13.4" diameter x 14" height, with 1 lamp uplight and 1 lamp down. Both standard and emergency units provided with matching "EM" style spun aluminum ceiling canopies. 'EM' Units : # 7702-2-42-SS-EM-Mod (custom length cables & cord; sloped ceiling & canopy.)
	MANUFACTURER:	Delray Lighting #7702-1-42-SS-Mod*
	BALLAST:	Electronic
	LAMPS:	(2) CFTR42W/30
	WATTAGE:	93
	VOLTAGE:	277
	REMARKS: △1	* ('EM' canopy with standard or emergency ballast), custom length cables & cord; sloped ceiling & canopy.) Verify: (1) Mounting height - standard cord is 6', (2) Modify for sloped ceiling where required, (3) Finish
FD-2	DESCRIPTION:	Cable mounted spun matte anodized decorative aluminum compact fluorescent pendant fixture, 17.4" diameter x 15.5" height, with 1 lamp uplight and 3 lamps down. Top & center bottom lamps on 1st ballast, 2 outer bottom lamps on 2nd ballast.
	MANUFACTURER:	Delray Lighting #7802-3-42-SS-Mod*
	BALLAST:	Electronic
	LAMPS:	(4) CFTR42W/30
	WATTAGE:	186
	VOLTAGE:	277
	REMARKS:	* (Custom length cables & cord; sloped ceiling & canopy.) Verify: (1) Mounting height - standard cord is 6', (2) Modify for sloped ceiling if required, (3) Finish.
FE-1	DESCRIPTION:	Cable mounted compact fluroescent decorative fixture with spun matte anodized aluminum disk shade and colored glass diffuser, custom length cables & cord. Finish and glass color as selected by Architect.
	MANUFACTURER: △1	Delray Lighting #2297-X-X-42-2-E-Mod*
	BALLAST:	Electronic
	LAMPS:	(1) CFTR42W/30
	WATTAGE:	44
	VOLTAGE:	277
	REMARKS: △1	* (custom length cables & cord.) Verify: (1) Mounting height - standard cord is 6', (2) Finish.
FE-2	DESCRIPTION:	Same as type FE-1.
	MANUFACTURER:	Delray Lighting #2297-X-X-42-2-E-Mod*
	BALLAST:	Electronic
	LAMPS:	(1) CFTR42W/30
	WATTAGE:	44
	VOLTAGE:	277
	REMARKS: △1	* (custom length cables & cord) Verify: (1) Mounting height - standard cord is 6'. (2) Finish
FE-3	DESCRIPTION:	Similar to type FE-2, except wall mounted. Overall height of 18.5", overall depth of 18" with 11.5" diameter shade.
	MANUFACTURER:	Delray Lighting #2382-X-X-42-2-E
	BALLAST:	Electronic
	LAMPS:	(1) CFTR42W/30
	WATTAGE:	44
	VOLTAGE:	277
	REMARKS:	Verify: (1) Mounting height, (2) Finish.
FF-1	DESCRIPTION:	Wall mounted linear fluorescent uplight, 7"d x 2"h x 20' long. Extruded aluminum housing,die cast end plates, die formed baked white reflector and micro-prismatic acrylic specular/diffusing lens.
	MANUFACTURER:	Peerless Lighting #LDD-010003--Q00-20'-2-V-Finish
	BALLAST:	Electronic
	LAMPS:	(5) F54T5/HO/830
	WATTAGE:	293
	VOLTAGE:	277
	REMARKS:	Verify (1) mounting height, (2) finish.
FF-2	DESCRIPTION:	Same as type FF-1, except 16' long, number of lamps and wattage
	MANUFACTURER:	Peerless Lighting #LDD-010003--Q00-16'-2-V-Finish
	BALLAST:	Electronic
	LAMPS:	(4) F54T5/HO/830
	WATTAGE:	234
	VOLTAGE:	277
	REMARKS:	Verify (1) mounting height, (2) finish.
FF-3	DESCRIPTION:	Same as type FF-1, except 8' long, number of lamps and wattage
	MANUFACTURER:	Peerless Lighting #LDD-010003--Q00-8'-2-V-Finish
	BALLAST:	Electronic
	LAMPS:	(2) F54T5/HO/830
	WATTAGE:	117
	VOLTAGE:	277
	REMARKS:	Verify (1) mounting height, (2) finish.
FG-1	DESCRIPTION:	Recessed 2'x2' fluorescent fixture with steel housing, reflector and perforated lamp shield, matte satin white finish.
	MANUFACTURER:	Focal Point #FLU-22-B-2-BX40-E-277-X*-PS-X-WH
	BALLAST:	Electronic
	LAMPS:	(2) FT40W/RS/30
	WATTAGE:	86
	VOLTAGE:	277
	REMARKS:	* Verify ceiling type (G = Grid, ST = Slotted T, DF= Drywall Frame Kit).
FG-2	DESCRIPTION:	Same as type FG-1, except with 3-lamps.
	MANUFACTURER:	Focal Point #FLU-22-B-3-BX40-E-277-X*-PS-X-WH
	BALLAST:	Electronic
	LAMPS:	(3) FT40W/RS/30
	WATTAGE:	133
	VOLTAGE:	277
	REMARKS:	* Verify ceiling type (G = Grid, ST = Slotted T, DF= Drywall Frame Kit).
FH-1	DESCRIPTION:	Wall mounted linear fluorescent wrap-aound, nominal 48" long x 4.5" square, extruded aluminum housing, die cast end plates, opal acrylic diffuser, 2-lamp cross-section.
	MANUFACTURER:	Wellmade #183-A-248T8-SSB
	BALLAST:	Electronic
	LAMPS:	(2) F32T8/835
	WATTAGE:	59
	VOLTAGE:	277
	REMARKS:	Verify (1) mounting height.
FH-2	DESCRIPTION:	Similar to type F-1, except 72" long.
	MANUFACTURER:	Wellmade #183-A-236-2T8-SSB
	BALLAST:	Electronic
	LAMPS:	(4) F25T8/835
	WATTAGE:	90
	VOLTAGE:	277
	REMARKS:	Verify (1) mounting height.

FIXTURE SCHEDULE

FA-3	DESCRIPTION:	Same as type FA-1, except different custom finishes.
	MANUFACTURER:	Ledalite #881-6-T02-W-20%Up/80%Dn.-Length-2(Em units: 6)-2-Sylvania QTP-Finish
	BALLAST:	Sylvania QTP
	LAMPS:	(2) F32/830XPS/ECO
	WATTAGE:	48
	VOLTAGE:	277
	REMARKS:	Verify (1) suspension heights (hts. & suspension cable lengths vary from 6" - 16'-0" see Arch. dwgs), (2) finish, (3) overall fixture lengths (lengths as indicated on the Plans), (4) Emergency Lighting Units - See Plans & Specifications. See note 1 below
FA-4	DESCRIPTION:	Same as type FA-1, except without uplight (downlight only.)
	MANUFACTURER:	Ledalite #881-6-T02-W-(Mod-100%Dn).-Length-2(Em units: 6)-2-Sylvania QTP-Finish
	BALLAST:	Sylvania QTP
	LAMPS:	(2) F32/830XPS/ECO
	WATTAGE:	48
	VOLTAGE:	277
	REMARKS:	Verify (1) suspension heights (hts. & suspension cable lengths vary from 6" - 16'-0" see Arch. dwgs), (2) finish, (3) overall fixture lengths (lengths as indicated on the Plans), (4) Emergency Lighting Units - See Plans & Specifications. See note 1 below
FA-5	DESCRIPTION:	Same as type FA-1, except different custom finishes and with 70%up/30% downlight distribution.
	MANUFACTURER:	Ledalite #881-6-T02-W-70%Up/30%Dn.-Length-2(Em units: 6)-2-Sylvania QTP-Finish
	BALLAST:	Sylvania QTP
	LAMPS:	(2) F32/830XPS/ECO
	WATTAGE:	48
	VOLTAGE:	277
	REMARKS:	Verify (1) suspension heights (hts. & suspension cable lengths vary from 6" - 16'-0" see Arch. dwgs), (2) finish, (3) overall fixture lengths (lengths as indicated on the Plans), (4) Emergency Lighting Units - See Plans & Specifications. See note 1 below
FAA-1	DESCRIPTION:	Exterior fluorescent sign fixture with one-piece extruded aluminum housing, die cast end plates, 49" length, with stanchion mount (two required per fixture).
	MANUFACTURER:	Kim Lighting #4305-277-Finish-(2)SM18-Finish
	BALLAST:	Electronic
	LAMPS:	(1) F32T8/830
	WATTAGE:	31
	VOLTAGE:	277
	REMARKS:	Verify finish (Black-BL, Dark Bronze-DB, Verde Green-GR, White-WH) as selected by architect. See mounting detail.
FAB-1	DESCRIPTION:	Recessed fluorescent wall wash fixture with 4.5" sq. aperture, black painted steel housing and structural components, glass prismatic lens, "Softglow" bronze trim.
	MANUFACTURER:	Kurt Versen #H7853-SZ-(EM)
	BALLAST:	Electronic
	LAMPS:	(1) CFTR42W/30
	WATTAGE:	44
	VOLTAGE:	277
	REMARKS:	Provide EM (emergency ballast) as shown on lighting plans.
△1 FAC-1	DESCRIPTION:	WALL MOUNTED VAPORTIGHT FIXTURE WITH DIE-CAST ALUMINUM HOUSING; PRISMATIC GLASS GLOBE, AND DIE-CAST ALUMINUM GUARD. WET LABEL.
	MANUFACTURER:	STONCO #VWXL-28-NFL-277V
	BALLAST:	Standard
	LAMPS:	(1) 28W
	WATTAGE:	30
	VOLTAGE:	277
	REMARKS:	
FB-1	DESCRIPTION:	Recessed 9"x48" 1-lamp fluorescent fixture with low iridescent specular 13-cell parabolic louvers and Osram Sylvania QTP series high performance ballast.
	MANUFACTURER:	Columbia #VHC94-132-G*-LS113-S-EB8277
	BALLAST:	Electronic
	LAMPS:	(1) F32/830XPS/ECO
	WATTAGE:	31
	VOLTAGE:	277
	REMARKS:	* Verify ceiling type (GF = Grid Ends, Flange Sides, G = Lay-in, F = Overlap Flange).
FB-2	DESCRIPTION:	Recessed 9"x48" 2-lamp fluorescent fixture with low iridescent specular 13-cell parabolic louvers, asymmetric wallwash light distribution, and Osram Sylvania QTP series high performance ballasts.
	MANUFACTURER:	Columbia #VHC94-132-G*-LS113-S-EB8277-1WW
	BALLAST:	Electronic
	LAMPS:	(2) F32/830XPS/ECO
	WATTAGE:	59
	VOLTAGE:	277
	REMARKS:	* Verify ceiling type (GF = Grid Ends, Flange Sides, G = Lay-in, F = Overlap Flange).
FC-1	DESCRIPTION:	Fluorescent task light mounted under cabinet or shelf; extruded aluminum housing with prismatic acrylic lay-in diffuser, 49-1/2" length.
	MANUFACTURER:	Alkco #SFLINCS150-048
	BALLAST:	Electronic
	LAMPS:	(1) F32T8/830
	WATTAGE:	31
	VOLTAGE:	120
	REMARKS:	
FC-2	DESCRIPTION:	Similar to type FC-1 except 37-1/2" length.
	MANUFACTURER:	Alkco #SFLINCS150-036
	BALLAST:	Electronic
	LAMPS:	(1) F25T8/830
	WATTAGE:	22
	VOLTAGE:	120
	REMARKS:	
FD-1	DESCRIPTION:	Cable mounted spun matte anodized decorative aluminum compact fluorescent pendant fixture, 13.4" diameter x 14" height, with 1 lamp uplight and 1 lamp down.
	MANUFACTURER:	Delray Lighting #7702-2-42-SS-Mod*
	BALLAST:	Electronic
	LAMPS:	(2) CFTR42W/30
	WATTAGE:	93
	VOLTAGE:	277
	REMARKS:	* (Custom length cables & cord;sloped ceiling & canopy.) Verify: (1) Mounting height - standard cord is 6', (2) Modify for sloped ceiling where required, (3) Finish.

FIXTURE SCHEDULE

A-1	DESCRIPTION:	Decorative incandescent pendant with spherical glass shade in a variety of colors, approximately 12" diameter.
	MANUFACTURER:	Illuminating Experiences #Big Sun/S2
	BALLAST:	None
	LAMPS:	(1) 40A19
	WATTAGE:	40
	VOLTAGE:	120
	REMARKS:	Verify suspension height and glass colors (white, dark blue, yellow, red, and green)
A-2	DESCRIPTION:	Decorative incandescent wall sconce with glass shade in a variety of colors, approximately 8" diameter.
	MANUFACTURER:	Illuminating Experiences #Big Sun/A
	BALLAST:	None
	LAMPS:	(1) 40A19
	WATTAGE:	40
	VOLTAGE:	120
	REMARKS:	Verify mounting height and glass colors (white, dark blue, yellow, red, and green)
B-1	DESCRIPTION:	Adjustable low voltage accent lighting mounted on bracket projecting 18 inches from wall. Integral transformer in surface canopy, or remote transformer in concealed accessible location.
	MANUFACTURER:	B-K Lighting #SN-0-FINISH-12-C-18"-PC75
	BALLAST:	120/12V trans.
	LAMPS:	(1) 35MR16/SP/20
	WATTAGE:	35
	VOLTAGE:	120
	REMARKS:	Verify with Architect: (1) Finish (Satin Bronze, Black, Aluminum, or Gloss White), (2) transformer in canopy or remote-mounted.
C-1	DESCRIPTION:	Surface mounted one-circuit lighting track, 16 ft. length, with spotlights and 1/2" cellular black metal louver. Provide number of spotlights shown on plan.
	MANUFACTURER:	Lighting Services Inc. #3000 series track and 290-00-Louver C fixture
	BALLAST:	None
	LAMPS:	(1) 90PAR38/H/FL28
	WATTAGE:	90
	VOLTAGE:	120
	REMARKS:	Verify with Architect: (1) finish (black, white, silver aluminum), (2) exact mounting location.
D-1	DESCRIPTION:	Recessed tungsten halogen wall wash fixture with 4.5" sq. aperture, black painted steel housing and structural components, glass prismatic lens, "Softglow" bronze trim
	MANUFACTURER:	Kurt Versen #H7854-SZ
	BALLAST:	None
	LAMPS:	(1) 150Q/DC (ETF)
	WATTAGE:	150
	VOLTAGE:	277
	REMARKS:	
EM-1	DESCRIPTION:	Flush wall or ceiling mounted emergency fixture with integral battery and solid state charger, automatic pop-out lamp assembly, door operation with integral 12v DC motor, adjustable 2-50w quartz halogen lamps, sealed 12v lead calcium recombinant battery, integral test switch and charge indicator, finish as selected by architect. See lighting plans for mounting application.
	MANUFACTURER:	Concealite #FS-50-90-RT-PT-CF
	BALLAST:	277/12 trans.
	LAMPS:	(2) 50W Quartz Halogen
	WATTAGE:	100
	VOLTAGE:	12
	REMARKS:	
EX-1	DESCRIPTION:	LED exit sign with cast aluminum housing, self-testing Continuous Verification System, green stencil letters.
	MANUFACTURER:	Prescolite #EDC-x-G-
	BALLAST:	None
	LAMPS:	(1) LED
	WATTAGE:	4
	VOLTAGE:	277
	REMARKS:	
EX-2	DESCRIPTION:	Exterior wet location LED exit sign with die cast aluminum housing, brushed aluminum face plate, full neoprene gasketing around letters and housing face, tamperproof screws, 6" high letters, wet location label.
	MANUFACTURER:	Lithonia #WLE--S-Color-IG-120/277
	BALLAST:	None
	LAMPS:	(1) LED
	WATTAGE:	1
	VOLTAGE:	120
	REMARKS:	Housing color (brushed aluminum, white, black or bronze) as selected by architect.
FA-1	DESCRIPTION:	Cable mounted linear direct/indirect fluorescent fixture with 20% uplight, 80% downlight, extruded aluminum housing,semi-specular alzak aluminum parabolic louver on the downlight aperture, tandem switching with one circuit controlling all lamps on the same side of all fixtures in the same room or space, and the other circuit controlling all lamps on the other side. Provided with Osram Sylvania QTP series high performance ballasts. Fixture lengths vary from 8' to 48', see lighting plans.
	MANUFACTURER:	Ledalite #881-6-T02-W-20%Up/80%Dn.-Length-2(Em units: 6)-2-Sylvania QTP-Finish
	BALLAST:	Sylvania QTP
	LAMPS:	(2) F32/830XPS/ECO
	WATTAGE:	48
	VOLTAGE:	277
	REMARKS:	Verify (1) suspension heights (hts. & suspension cable lengths vary from 6" - 16'-0" see Arch. dwgs), (2) finish, (3) overall fixture lengths (lengths as indicated on the Plans), (4) Emergency Lighting Units - See Plans & Specifications. See note 1 below
FA-2	DESCRIPTION:	Same as type FA-1, except with 70% uplight, 30% downlight.
	MANUFACTURER:	Ledalite #881-6-T02-W-70%Up/30%Dn.-Length-2(Em units: 6)-2-Sylvania QTP-Finish
	BALLAST:	Sylvania QTP
	LAMPS:	(2) F32/830XPS/ECO
	WATTAGE:	48
	VOLTAGE:	277
	REMARKS:	Verify (1) suspension heights (heights & suspension cable lengths vary - see Architectural Drawings), (2) finish, (3) overall fixture lengths (lengths as indicated on the Plans), (4) Emergency Lighting Units #NAME? note 1 below

FIELD PAOLI

Architecture
1045 Sansome St.
Suite 206
San Francisco
California, 94111
Tel. 415. 788. 6606
Fax 415. 788. 6650

SARATOGA COMMUNITY LIBRARY

SANTA CLARA COUNTY LIBRARY

13650 Saratoga Avenue
Saratoga, California 95070

O'MAHONY & MYER
ELECTRICAL and LIGHTING DESIGN
4340 REDWOOD HWY, SUITE 245
SAN RAFAEL, CALIFORNIA 94903
(415) 492-0420/FAX (415) 479-9662
www.ommconsulting.com

DATE	JANUARY 25, 2002
REVISIONS	
CONFORM SET RE-PLOT	
△1 ADDENDUM #1	11/20/01
△2 ADDENDUM #2	12/03/01
△3 ADDENDUM #3	12/04/01
△4 ADDENDUM #4	12/27/01

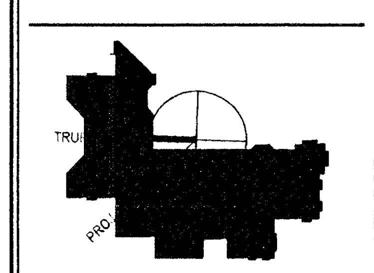

FIXTURE SCHEDULE

SCALE	NONE
DRAWN BY	AT/TV
CHECKED BY	NT/PC
JOB NO.	200095

PHASE - 2

SHEET NO. **E0.2**

All drawings and written material appearing herein constitute the original and unpublished work of the architect and the same may not be duplicated, used, or disclosed without the written consent of the architect © Field Paoli

SARATOGA_LIBRARY_200095
(USING ARIAL.SHX FOR MISSING AlbertusExtraBold FONT)

LIGHTING COMPLIANCE SUMMARY — LTG-2

PROJECT NAME: SARATOGA LIBRARY — DATE: 09/20/01

ACTUAL LIGHTING POWER

LUMINAIRE NAME	DESCRIPTION	NUMBER OF LUMINAIRES	WATTS PER LUMINAIRE (Including Ballast)	CEC DEFAULT Y	N*	TOTAL WATTS
FN-1	WALL MOUNTED MH ACCENT LIGHT	3	42	☐	☒	126
FP-1	COMPACT FLUORESCENT DOWN LIGHT	13	35	☐	☒	455
FQ-1	COMPACT FLUORESCENT WALL WASH	26	34	☐	☒	884
FR-1	DIRECT/INDIRECT LINEAR FLUORESCENT	24	60	☐	☒	1440
FS-1	RECESSED 2X4 LENSED TROFFER	17	60	☐	☒	1020
FV-1	COMPACT FLUORESCENT WALL WASH	32	52	☐	☒	1664
FX-1	FLUORESCENT TABLE LIGHT	6	34	☐	☒	204
FY-1	WALL MTD DIRECT/INDIRECT LINEAR FLUORESCENT		60	☐	☒	0
FY-2	CABLE MTD DIRECT/INDIRECT LINEAR FLUORESCENT		60	☐	☒	1140
MJ-1	RECESSED MH DOWN LIGHT	12	42	☐	☒	504
MJ-2	RECESSED MH ACCENT LIGHT	10	42	☐	☒	420
MK-1	METAL HALIDE PENDANT	10	118	☐	☒	1180
					SUBTOTAL FROM THIS PAGE	9037
					PLUS SUBTOTAL FROM CONTINUATION PAGE	54922
					LESS CONTROL CREDIT WATTS (FROM LTG-3)	908
*If not using the CEC Default value, please provide supporting documentation					ADJUSTED ACTUAL WATTS	63053

ALLOWED LIGHTING POWER (Choose One Method)

COMPLETE BUILDING METHOD

BUILDING CATEGORY (From § 146(b) Table 1-M)	WATTS PER SF	COMPLETE BLDG. AREA	ALLOWED WATTS

AREA CATEGORY METHOD

AREA CATEGORY (From § 146(b) Table 1-N)	WATTS PER SF	AREA (SF)	ALLOWED WATTS
TOTALS		48552	66786

TAILORED METHOD

TOTAL ALLOWED WATTS (From LTG-4 or from computer run)

Nonresidential Compliance Form — November 1998

CERTIFICATE OF COMPLIANCE (Part 2 of 2) — LTG-1

PROJECT NAME: SARATOGA LIBRARY — DATE: 09/20/01

INSTALLED LIGHTING SCHEDULE

CODE	LUMINAIRE DESCRIPTION	LAMPS TYPE DESCRIPTION	LAMPS #	WATTS PER LAMP	BALLASTS TYPE DESCRIPTION	BALLASTS #	LUMINAIRE (Lamp+Ballast) #	LUMINAIRE WATTS	TOTAL WATTS
FN-1	METAL HALIDE		1	35	STANDARD	1	3	42	126
FP-1	FLUORESCENT	CFTR32W/30	1	0	ELECTRONIC	1	13	35	455
FQ-1	FLUORESCENT	CFTR32W/30	1	32	ELECTRONIC	1	26	34	884
FR-1	FLUORESCENT	F32T8/830	2	30	ELECTRONIC	1	24	60	1440
FS-1	FLUORESCENT	F32T8/835	2	32	ELECTRONIC	1	17	60	1020
FV-1	FLUORESCENT	BX55	1	55	ELECTRONIC	0	32	52	1664
FX-1	FLUORESCENT	CFTR32W	1	32	ELECTRONIC	1	6	34	204
FY-1	FLUORESCENT	F32T8/830	2	32	ELECTRONIC	1	0	60	0
FY-2	FLUORESCENT	F32T8/830	2	32	ELECTRONIC	1	19	60	1140
MJ-1	METAL HALIDE	35W PAR20/MH	1	35	ELECTRONIC	1	12	42	504
MJ-2	METAL HALIDE	35W PAR20/MH	1	35	ELECTRONIC	1	10	42	420
MK-1	METAL HALIDE		1	100	ELECTRONIC	1	10	118	1180
								SUBTOTAL FROM THIS PAGE	9037
								BUILDING TOTAL	63959
								LESS CONTROL CREDIT WATTS (From LTG-3)	908
								ADJUSTED ACTUAL WATTS	63053

MANDATORY AUTOMATIC CONTROLS

CONTROL LOCATION (Room #)	CONTROL IDENTIFICATION	CONTROL TYPE (Auto Time Switch, Exterior, etc.)	SPACE CONTROLLED	NOTE TO FIELD

CONTROLS FOR CREDIT

CONTROL LOCATION (Room # or Dwg. #)	CONTROL IDENTIFICATION	CONTROL TYPE (Occupant, Daylight, Dimming, etc.)	LUMINAIRES CONTROLLED TYPE	# OF LUMIN	NOTE TO FIELD

NOTES TO FIELD - For Building Department Use Only

Nonresidential Compliance Form — November 1998

CERTIFICATE OF COMPLIANCE (Part 1 of 2) — LTG-1

PROJECT NAME: SARATOGA LIBRARY — DATE: 09/20/01
PROJECT ADDRESS: 13650 SARATOGA AVENUE, SARATOGA, CA 95070 — Building Permit #
PRINCIPAL DESIGNER-LIGHTING: PIETER COLENBRANDER — TELEPHONE: 415-492-0420 — Checked by/Date
DOCUMENTATION AUTHOR: PIETER COLENBRANDER — TELEPHONE: 415-492-0420 — Enforcement Agency Use

GENERAL INFORMATION

DATE OF PLANS: 09/20/01 — BUILDING CONDITIONED FLOOR AREA: 48291 — CLIMATE ZONE: 3

BUILDING TYPE: ☒ NONRESIDENTIAL ☐ HIGH RISE RESIDENTIAL ☐ HOTEL/MOTEL GUEST ROOM
PHASE OF CONSTRUCTION: ☒ NEW CONSTRUCTION ☐ ADDITION ☐ ALTERATION ☐ UNCONDITIONED (File Affidavit)
METHOD OF LIGHTING COMPLIANCE: ☐ COMPLETE BUILDING ☒ AREA CATEGORY ☐ TAILORED ☐ PERFORMANCE

STATEMENT OF COMPLIANCE

This Certificate of Compliance lists the building features and performance specifications needed to comply with Title 24, Parts 1 and 6 of the California Code of Regulations. This certificate applies only to building lighting requirements. The documentation preparer hereby certifies that the documentation is accurate and complete.

DOCUMENTATION AUTHOR: PIETER COLENBRANDER — SIGNATURE — DATE: 09/20/01

The Principal Lighting Designer hereby certifies that the proposed building design represented in this set of construction documents is consistent with the other compliance forms and worksheets, with the specifications, and with any other calculations submitted with this permit application. The proposed building has been designed to meet the envelope requirements contained in the applicable parts of Sections 110, 119, 130 through 132, 146, and 149 of Title 24, Part 6.

Please check one:
- ☒ I hereby affirm that I am eligible under the provisions of Division 3 of the Business and Professions Code to sign this document as the person responsible for its preparation; and that I am licensed in the State of California as a civil engineer or electrical engineer, or I am a licensed architect.
- ☐ I affirm that I am eligible under the provisions of Division 3 of the Business and Professions Code by section 5537.2 or 6737.3 to sign this document as the person responsible for its preparation; and that I am a licensed contractor performing this work.
- ☐ I affirm that I am eligible under Division 3 of the Business and Professions Code to sign this document because it pertains to a structure or type of work described as exempt pursuant to Business and Professions Code Sections 5537, 5538, and 6737.1.

(These sections of the Business and Professions Code are printed in full in the Nonresidential Manual.)

PRINCIPAL LIGHTING DESIGNER-NAME: PIETER COLENBRANDER — SIGNATURE — DATE: 09/20/01 — LIC. #: E14738

LIGHTING MANDATORY MEASURES

Indicate location on plans of Note Block for Mandatory Measures: E0.3

INSTRUCTIONS TO APPLICANT

For detailed instructions on the use of this and all Energy Efficiency Standards compliance forms, please refer to the Nonresidential Manual published by the California Energy Commission.
LTG-1: Required on plans for all submittals. Part 2 may be incorporated in schedules on plans.
LTG-2: Required for all submittals.
LTG-3: Optional. Use only if lighting control credits are taken.
LTG-4: Optional. Use only if Tailored Method is used. Parts 2 and 3 used only if applicable.

Nonresidential Compliance Form — November 1998

LIGHTING CONTROL CREDIT WORKSHEET — LTG-3

PROJECT NAME: SARATOGA LIBRARY — DATE: 09/20/01

WORKSHEET

A ROOM# ZONE ID	B LIGHTING CONTROL DESCRIPTION	C PLANS REF.	D ROOM AREA (SF)	E DAYLIGHTING ROOM RATIO*	F DAYLIGHTING GLAZING VLT	G WATTS OF CONTROL LIGHTING	H LIGHTING ADJUSTMENT FACTOR	I CONTROL CREDIT WATTS (GXH)
COMMUNITY R	DIMMER	E-2.1.C	1897	0	0	4530	0.2	908
							PAGE TOTAL	908
							BUILDING TOTAL	908

*For windows, use the Window Wall Ratio for the room.
For skylights, use the Skylight-to-Roof ratio for the room.
Enter on LTG-2: Actual Lighting Power Calculation

Nonresidential Compliance Form — November 1998

LIGHTING COMPLIANCE SUMMARY — LTG-2

PROJECT NAME: SARATOGA LIBRARY — DATE: 09/20/01

ACTUAL LIGHTING POWER

LUMINAIRE NAME	DESCRIPTION	NUMBER OF LUMINAIRES	WATTS PER LUMINAIRE (Including Ballast)	CEC DEFAULT Y	N*	TOTAL WATTS
A-1	DECORATIVE INCANDESCENT PENDANT	12	40	☐	☒	480
A-2	DECORATIVE INCANDESCENT WALL SCONCE	13	40	☐	☒	520
B-1	WALL MOUNTED INCANDESCENT ACCENT LIGHT		35	☐	☒	70
C-1	TRACK WITH ACCENT FIXTURES	8	90	☒	☐	720
FA-1	DIRECT/INDIRECT LINEAR FLUORESCENT	550	48	☐	☒	26400
FB-1	RECESSED 9"X48" PARABOLIC FLUORESCENT	126	25	☐	☒	3150
FB-2	RECESSED 9"X48" PARABOLIC FLUORESCENT	23	48	☐	☒	1104
FC-1	FLUORESCENT UNDERCABINET TASK LIGHT	3	30	☐	☒	90
FC-2	FLUORESCENT UNDERCABINET TASK LIGHT	2	30	☐	☒	60
FD-1	COMPACT FLUORESCENT PENDANT	72	78	☐	☒	5616
FD-2	COMPACT FLUORESCENT PENDANT	34	171	☐	☒	5814
FE-1	COMPACT FLUORESCENT PENDANT	14	44	☐	☒	616
					SUBTOTAL FROM THIS PAGE	44640
					PLUS SUBTOTAL FROM CONTINUATION PAGE	0
					LESS CONTROL CREDIT WATTS (FROM LTG-3)	
*If not using the CEC Default value, please provide supporting documentation					ADJUSTED ACTUAL WATTS	

ALLOWED LIGHTING POWER (Choose One Method)

COMPLETE BUILDING METHOD

BUILDING CATEGORY (From § 146(b) Table 1-M)	WATTS PER SF	COMPLETE BLDG. AREA	ALLOWED WATTS

AREA CATEGORY METHOD

AREA CATEGORY (From § 146(b) Table 1-N)	WATTS PER SF	AREA (SF)	ALLOWED WATTS
LIBRARY (STACKS)	1.5	20509	30764
KITCHEN	1.7	80	136
LIBRARY (READING AREAS)	1.2	10418	12499
CORRIDORS	0.6	908	545
CONFERENCE CENTERS *	1.6	1176	1882
LOUNGE/RECREATION	1.1	792	871
ELECTRICAL ROOMS	0.7	560	392
CLASSROOMS/TRAINING	1.6	790	1264
	TOTALS	35231	48353

TAILORED METHOD

TOTAL ALLOWED WATTS (From LTG-4 or from computer run)

Nonresidential Compliance Form — November 1998

CERTIFICATE OF COMPLIANCE (Part 2 of 2) — LTG-1

PROJECT NAME: SARATOGA LIBRARY — DATE: 09/20/01

INSTALLED LIGHTING SCHEDULE

CODE	LUMINAIRE DESCRIPTION	LAMPS TYPE DESCRIPTION	LAMPS #	WATTS PER LAMP	BALLASTS TYPE DESCRIPTION	BALLASTS #	LUMINAIRE (Lamp+Ballast) #	LUMINAIRE WATTS	TOTAL WATTS
A-1	INCANDESCENT	40A	1	40	NONE	0	12	40	480
A-2	INCANDESCENT		1	0	NONE	0	13	40	520
B-1	INCANDESCENT	35MR16/NFL-FFA		35	120/12V TRANSFORMER			35	70
C-1	INCANDESCENT	90PAR38/HAL/FL	28	90	NONE	0	8	90	720
FA-1	FLUORESCENT	FO32/830XPS/E	20	30	ELECTRONIC	1	550	48	26400
FB-1	FLUORESCENT	FO32/830XPS/E	OO	30	ELECTRONIC	1	126	25	3150
FB-2	FLUORESCENT	FO32/830XPS/E	20	30	ELECTRONIC	1	23	48	1104
FC-1	FLUORESCENT	F32T8/830	1	30	ELECTRONIC	1	3	30	90
FC-2	FLUORESCENT	F25T8/830	1	25	ELECTRONIC	1	2	30	60
FD-1	FLUORESCENT	CFTR42W/30	2	42	ELECTRONIC	2	72	78	5616
FD-2	FLUORESCENT	CFTR42W/30	4	42	ELECTRONIC	2	34	171	5814
FE-1	FLUORESCENT	CFTR42W/30	1	42	ELECTRONIC	1	14	44	616
								SUBTOTAL FROM THIS PAGE	44640
								BUILDING TOTAL	
								LESS CONTROL CREDIT WATTS (From LTG-3)	
								ADJUSTED ACTUAL WATTS	

MANDATORY AUTOMATIC CONTROLS

CONTROL LOCATION (Room #)	CONTROL IDENTIFICATION	CONTROL TYPE (Auto Time Switch, Exterior, etc.)	SPACE CONTROLLED	NOTE TO FIELD

CONTROLS FOR CREDIT

CONTROL LOCATION (Room # or Dwg. #)	CONTROL IDENTIFICATION	CONTROL TYPE (Occupant, Daylight, Dimming, etc.)	LUMINAIRES CONTROLLED TYPE	# OF LUMIN	NOTE TO FIELD
COMMUNITY RM	DIMMER	MULTI-SCENE DIMMING SYSTEM	FR-1, FR-2, FQ-1, FE	25	

NOTES TO FIELD - For Building Department Use Only

Nonresidential Compliance Form — November 1998

TITLE 24 LIGHTING MANDATORY MEASURES

PROJECT NAME: SARATOGA LIBRARY — DATE: 09/20/01

INDIVIDUAL ROOM / AREA CONTROLS
- ☒ Each room or area in the building with floor-to-ceiling walls is equipped with a separate switch or occupancy sensor device to control the lights. Local switches are within site of the area controlled. Remote switches have pilot lights to indicate remote status.

UNIFORM REDUCTION FOR INDIVIDUAL ROOMS
- ☒ All rooms and areas greater than 100 square feet and more than 1 watt per square foot of lighting load shall be controlled with Bi-level switching for a uniform reduction of the lighting within the room. Corridors and areas with only one fixture or those controlled by an occupancy sensing device are exempt from this requirement.

DAYLIT AREA CONTROL
- ☒ All rooms with windows and skylights that are greater than 250 square feet and that allow for the effective use of daylight shall have 50 percent of the lamps in each daylit area controlled by a separate switch; or
- ☐ The effective use of daylight throughout cannot be accomplished because the windows are continuously shaded by a building on the adjacent lot. A diagram of shading during different times of year is included on the plans.

BUILDING LIGHTING SHUT-OFF
- ☒ The building lighting shut-off system consists of an automatic time switch, with a zone for each floor or area; or
- ☐ The building is separately metered and is less than 5,000 square feet. It is exempt from the automatic shut-off requirement.

OVERRIDE FOR BUILDING LIGHTING SHUT-OFF
- ☒ The automatic building shut-off system is provided with a manual accessible override switch in sight of the lights in each area. Each area of override does not exceed 5,000 square feet.

CONTROL OF EXTERIOR LIGHTS
- ☒ All exterior mounted fixtures served from the electrical panels inside the building are controlled by a directional photocell on the roof or an astro-dial timeclock and corresponding relays or contactor in the lighting control panel.

TANDEM WIRING FOR TWO-LAMP BALLASTS
- ☒ All one and three lamp fluorescent fixtures located in the same room, on the same switch control, and within 10 feet of each other are tandem wired with two-lamp ballasts where required by Standards Section 132; or
- ☐ All three lamp fluorescent fixtures are specified with electronic high-frequency type ballast's and are exempt from the two-lamp tandem wiring requirement.

FLUORESCENT BALLAST AND LUMINAIRES CERTIFIED
- ☒ All fluorescent fixtures subject to certification and specified for the projects are certified.

AUTOMATIC CONTROL DEVICES CERTIFIED
- ☒ All automatic control devices specified are certified. All alternate equipment shall be certified and installed as directed by the manufacturer.

HIGH-RISE RESIDENTIAL AND HOTEL/MOTEL GUEST ROOMS
- ☐ The lighting systems in the high-rise residential occupancies comply with Standards Section 130(b).
- ☐ The lighting systems in the hotel/motel guest rooms comply with Standards Section 130(b).

LIGHTING COMPLIANCE SUMMARY — LTG-2

PROJECT NAME: SARATOGA LIBRARY — DATE: 09/20/01

ACTUAL LIGHTING POWER

LUMINAIRE NAME	DESCRIPTION	NUMBER OF LUMINAIRES	WATTS PER LUMINAIRE (Including Ballast)	CEC DEFAULT Y	N*	TOTAL WATTS
FE-2	COMPACT FLUORESCENT PENDANT	32	44	☐	☒	1408
FE-3	COMPACT FLUORESCENT PENDANT	4	44	☐	☒	176
FE-4	COMPACT FLUORESCENT PENDANT	8	34	☐	☒	272
FF-1	WALL MOUNTED INDIRECT LINEAR FLUORESCENT		61	☐	☒	2928
FG-1	RECESSED 2X2 FLUORESCENT	43	86	☐	☒	3698
FH-1	SURFACE MOUNTED FLUORESCENT WRAPAROUND		60	☐	☒	300
FH-2	SURFACE MOUNTED FLUORESCENT WRAPAROUND		100	☐	☒	400
FH-3	SURFACE MOUNTED FLUORESCENT WRAPAROUND		120	☐	☒	480
FH-4	SURFACE MOUNTED FLUORESCENT WRAPAROUND		60	☐	☒	180
FH-5	SURFACE MOUNTED FLUORESCENT WRAPAROUND		50	☐	☒	350
FJ-1	SURFACE MOUNTED FLUORESCENT STRIP LIGHT		30	☐	☒	30
FJ-2	SURFACE MOUNTED FLUORESCENT STRIP LIGHT		60	☐	☒	60
					SUBTOTAL FROM THIS PAGE	10282
					PLUS SUBTOTAL FROM CONTINUATION PAGE	44640
					LESS CONTROL CREDIT WATTS (FROM LTG-3)	
*If not using the CEC Default value, please provide supporting documentation					ADJUSTED ACTUAL WATTS	

ALLOWED LIGHTING POWER (Choose One Method)

COMPLETE BUILDING METHOD

BUILDING CATEGORY (From § 146(b) Table 1-M)	WATTS PER SF	COMPLETE BLDG. AREA	ALLOWED WATTS

AREA CATEGORY METHOD

AREA CATEGORY (From § 146(b) Table 1-N)	WATTS PER SF	AREA (SF)	ALLOWED WATTS
RESTROOMS	0.6	1041	625
SUPPORT AREAS	0.6	216	130
MAIN ENTRY LOBBY *	1.5	3129	5294
OFFICE	1.3	6153	7999
AUDITORIUM *	2	1940	3880
COMMERCIAL STORAGE	0.6	842	505
	TOTALS	48552	66786

TAILORED METHOD

TOTAL ALLOWED WATTS (From LTG-4 or from computer run)

Nonresidential Compliance Form — November 1998

CERTIFICATE OF COMPLIANCE (Part 2 of 2) — LTG-1

PROJECT NAME: SARATOGA LIBRARY — DATE: 09/20/01

INSTALLED LIGHTING SCHEDULE

CODE	LUMINAIRE DESCRIPTION	LAMPS TYPE DESCRIPTION	LAMPS #	WATTS PER LAMP	BALLASTS TYPE DESCRIPTION	BALLASTS #	LUMINAIRE (Lamp+Ballast) #	LUMINAIRE WATTS	TOTAL WATTS
FE-2	FLUORESCENT	CFTR42W/30	1	42	ELECTRONIC	1	32	44	1408
FE-3	FLUORESCENT	CFTR42W/30	1	42	ELECTRONIC	1	4	44	176
FE-4	FLUORESCENT	CFTR32W/GX24Q/3		32	ELECTRONIC	1	8	34	272
FF-1	FLUORESCENT	F54T5/HO/830	1	54	ELECTRONIC	1	48	61	2928
FG-1	FLUORESCENT	FT40W/2G11/RS	80	0	ELECTRONIC	1	43	86	3698
FH-1	FLUORESCENT	F32T8/835	2	32	ELECTRONIC	1	5	60	300
FH-2	FLUORESCENT	F25T8/835	4	25	ELECTRONIC	2	4	100	400
FH-3	FLUORESCENT	F32T8/835	4	32	ELECTRONIC	2	4	120	480
FH-4	FLUORESCENT	F32T8/835	2	32	ELECTRONIC	1	3	60	180
FH-5	FLUORESCENT	F25T8/835	2	25	ELECTRONIC	1	7	50	350
FJ-1	FLUORESCENT	F32T8/835	1	32	ELECTRONIC	1	1	30	30
FJ-2	FLUORESCENT	F32T8/835	2	32	ELECTRONIC	1	1	60	60
								SUBTOTAL FROM THIS PAGE	10282
								BUILDING TOTAL	
								LESS CONTROL CREDIT WATTS (From LTG-3)	
								ADJUSTED ACTUAL WATTS	

MANDATORY AUTOMATIC CONTROLS

CONTROL LOCATION (Room #)	CONTROL IDENTIFICATION	CONTROL TYPE (Auto Time Switch, Exterior, etc.)	SPACE CONTROLLED	NOTE TO FIELD

CONTROLS FOR CREDIT

CONTROL LOCATION (Room # or Dwg. #)	CONTROL IDENTIFICATION	CONTROL TYPE (Occupant, Daylight, Dimming, etc.)	LUMINAIRES CONTROLLED TYPE	# OF LUMIN	NOTE TO FIELD

NOTES TO FIELD - For Building Department Use Only

Nonresidential Compliance Form — November 1998

FIELD PAOLI
Architecture
1045 Sansome St.
Suite 206
San Francisco
California, 94111
Tel. 415. 788. 6606
Fax 415. 788. 6650

SARATOGA COMMUNITY LIBRARY

SANTA CLARA COUNTY LIBRARY

13650 Saratoga Avenue
Saratoga, California 95070

O'MAHONY & MYER
ELECTRICAL and LIGHTING DESIGN
4340 REDWOOD HWY, SUITE 245
SAN RAFAEL, CALIFORNIA 94903
(415) 492-0420/FAX (415) 479-9662
www.ommconsulting.com

DATE: OCTOBER 26, 2001

REVISIONS: BID SET

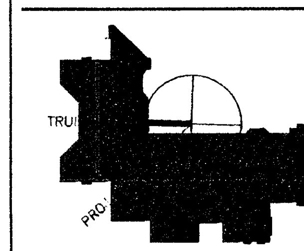

TITLE 24

SCALE: NONE
DRAWN BY: AT
CHECKED BY: NT/PC
JOB NO.: 200095

PHASE - 2

SHEET NO. **E0.3**

All drawings and written material appearing herein constitute the original and unpublished work of the architect and the same may not be duplicated, used, or disclosed without the written consent of the architect © Field Paoli

FILE: P:\2000\SARATOGA_LIBRARY-200095\CAD\E__03-SLib.dwg.DWG 09/20/01 at 10:52

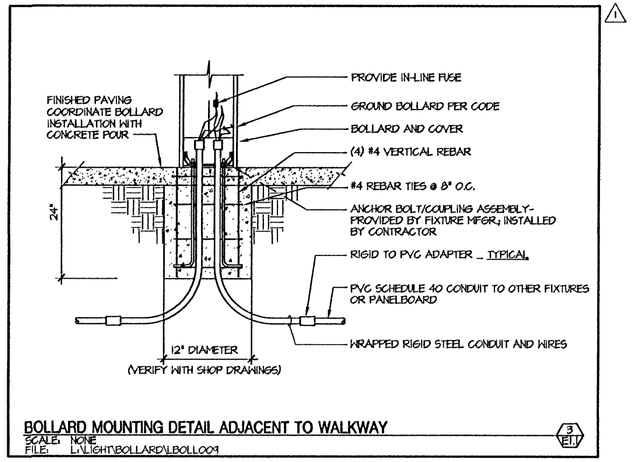

BOLLARD MOUNTING DETAIL ADJACENT TO WALKWAY (3 / E1.1)
SCALE: NONE
FILE: L:\LIGHT\BOLLARD\LBOLL009

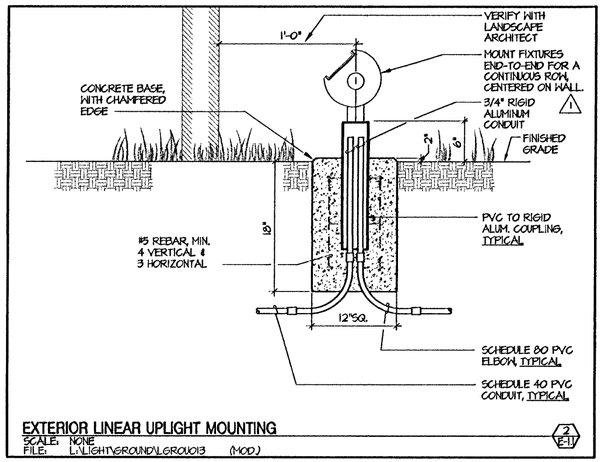

EXTERIOR LINEAR UPLIGHT MOUNTING (2 / E-1.1)
SCALE: NONE
FILE: L:\LIGHT\GROUND\LGROU013 (MOD.)

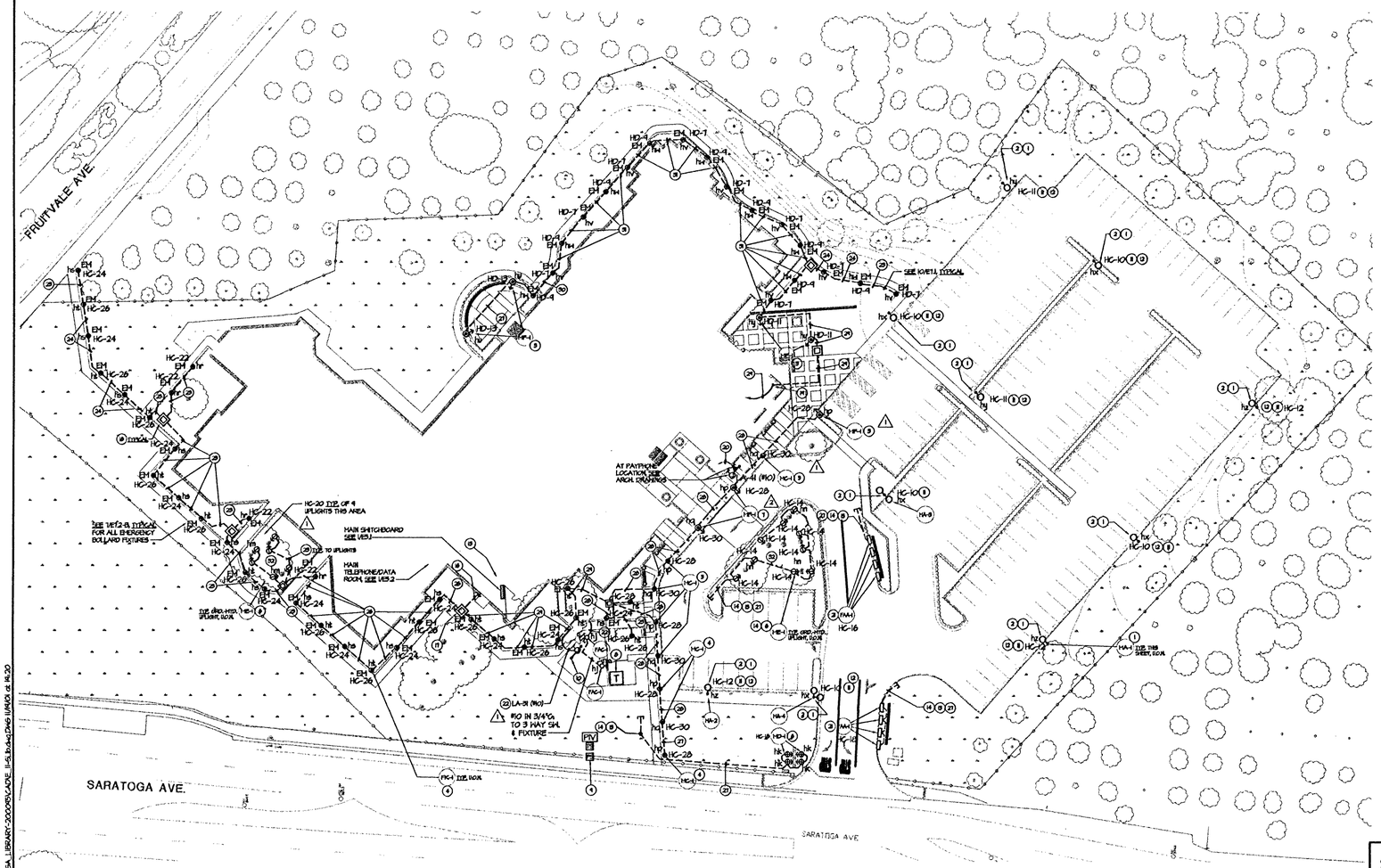

SITE PLAN - ELECTRICAL (1 / E-1.1)
SCALE: 1" = 30'
FILE: ... Xref\SITE-10-17-01

NUMBERED SHEET NOTES

1. SEE PHASE 1 DRAWINGS FOR POLEBASE.
2. PROVIDE AND INSTALL LIGHT FIXTURE AND POLE ON POLE BASE INSTALLED IN PHASE 1. SEE PHASE 1 DRAWINGS.
3. POLE BASE MOUNTING, SEE 3/E1.2.
4. BOLLARD BASE MOUNTING, SEE 13/E1.2.
5. BOLLARD BASE MOUNTING, SEE 3/E1.1.
6. FOR GROUND MOUNTED FIXTURE, SEE 14/E1.2.
7. POLE BASE MOUNTING, SEE 3/E1.2.
8. PG&E PAD MOUNT TRANSFORMER.
9. SPRINKLER FIRE ALARM DEVICES VERIFY LOCATION, SEE 1/E5.3. EXTEND CONDUITS TO DEVICES. PROVIDE AND INSTALL WIRING PER 1/E5.3.
10. IRRIGATION CONTROLLER, VERIFY LOCATION.
11. PROVIDE AND INSTALL WIRING TO LIGHT FIXTURES FROM THE PANEL BOARD INDICATED VIA THE LIGHTING CONTROL RELAY PANEL AND CONNECT COMPLETE. SEE 1/E6.3 AND 'LCP' SCHEDULES. THE WIRING SHALL BE INSTALLED IN THE SITE CONDUIT INSTALLED IN PHASE 1.
12. WIRE SIZE TO BE #8AWG THROUGHOUT BRANCH CIRCUIT LENGTH.
13. EXTEND ALL CONDUITS STUBBED UP AS PART OF PHASE 1 TO THE PANEL BOARDS AND CONTROL PANELS. PROVIDE AND INSTALL ALL CONDUIT AND WIRING AS REQUIRED. SEE PHASE 1 DRAWINGS.
14. PROVIDE AND INSTALL 1" CONDUIT FROM (E) STUBOUT AT PLANTER AREA TO NEW LIGHT FIXTURES AS INDICATED. PROVIDE AND INSTALL WIRING TO LIGHT FIXTURES FROM PANELBOARD INDICATED VIA THE LIGHTING CONTROL RELAY PANEL AND CONNECT COMPLETE. SEE 1/E6.3 AND 'LCP' SCHEDULES. SEE NOTE (13) BELOW FOR ADDITIONAL CONDUIT REQUIREMENTS.
15. WIRE TO BE #10 AWG THROUGH OUT CIRCUIT LENGTH.
16. (E) CONDUITS TO ELECTRICAL ROOM, SEE PHASE 1 DRAWINGS. INSTALL HOMERUN WIRING IN THESE CONDUITS. ALSO SEE NOT 13 ABOVE.
17. (E) PULLBOX, SEE PHASE 1 DRAWINGS.
18. PROVIDE AND INSTALL PULLBOXES WITH FULL TRAFFIC COVERS AS REQUIRED. COORDINATE LOCATION WITH LANDSCAPE. SUBMIT LOCATIONS OF PULLBOXES FOR APPROVAL PRIOR TO INSTALLATION.
19. CONDUIT TO RISE UP IN WALL TO CEILING. HOMERUN TO ELECTRICAL ROOM.
20. 3/4"C. WITH PULL WIRE TO MAIN TEL/DATA ROOM.
21. FLUORESCENT WALL UPLIGHT MOUNTED IN PLANTING ON REINFORCED, RAISED CONCRETE FOOTING. SEE 2/E1.1.
22. INSTALL WIRING IN CONDUITS INSTALLED AS PART OF PHASE 1. SEE NOTE 13 ABOVE.
23. 3#8, 1#12G IN 1"C.
24. 6#8, 1#12G IN 1"C.
25. 9#8, 1#12G IN 1 1/4"C.
26. 11#8, 1#12G IN 1 1/4"C.
27. 2#8, 1#12G IN 3/4"C.
28. 4#8, 1#12G IN 1"C.
29. 10#8, 1#12G IN 1 1/4"C.
30. 5#8, 1#12G IN 1"C.
31. 8#8, 1#12G IN 1 1/4"C.
32. MOUNT TREE LIGHTS 2'-0" FROM TRUNK TO CENTERLINE OF FIXTURE.

SEE 3/E2.1C FOR EXTERIOR LIGHTING CONTROLS.

NOTE:
SEE PHASE 1 DRAWINGS FOR CONDUIT AND POLE BASES INSTALLED AS PART OF PHASE. SEE LANDSCAPE DRAWINGS L1 AND L2 FOR EXACT LOCATION OF SITE LIGHTING FIXTURES.

FIELD PAOLI

Architecture
1045 Sansome St.
Suite 206
San Francisco
California, 94111
Tel. 415. 788. 6606
Fax 415. 788. 6650

SARATOGA COMMUNITY LIBRARY

SANTA CLARA COUNTY LIBRARY

13650 Saratoga Avenue
Saratoga, California 95070

O'MAHONY & MYER
ELECTRICAL and LIGHTING DESIGN
4340 REDWOOD HWY., SUITE 245
SAN RAFAEL, CALIFORNIA 94903
(415) 492-0420/FAX (415) 472-5602
www.commonsuiting.com

DATE	JANUARY 25, 2002

REVISIONS
CONFORM SET RE-PLOT

1	ADDENDUM #1	11/20/01
2	ADDENDUM #2	12/03/01
3	ADDENDUM #3	12/04/01
4	ADDENDUM #4	12/27/01

TRUE NORTH
FIELD NORTH

SITE PLAN - ELECTRICAL

SCALE	1" = 30'
DRAWN BY	OO/JL/TV
CHECKED BY	NT/PC
JOB NO.	200095

PHASE - 2

SHEET NO. **E-1.1**

All drawings and written material appearing herein constitute the original and unpublished work of the architect and the same may not be duplicated, used, or disclosed without the written consent of the architect ©Field Paoli

SARATOGA_LIBRARY_200095
(USING ARIAL SHX FOR MISSING Arial\uni\ansi\ISO8859-1 FONT)
FILE: P:\200200\SARATOGA_LIBRARY-200095\CADD\E_11-5-01.dwg 11/14/01 at 14:20

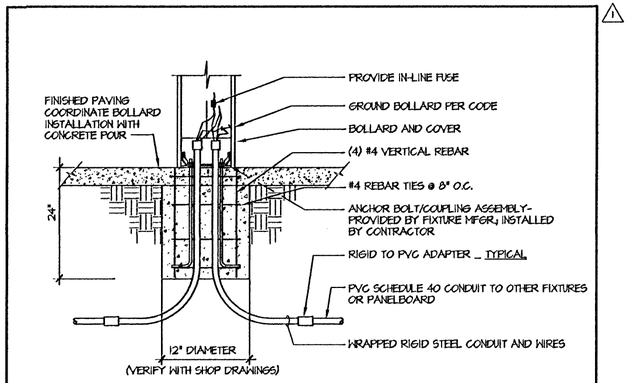

BOLLARD MOUNTING DETAIL ADJACENT TO WALKWAY (3/E1.1)
SCALE: NONE
FILE: L:\LIGHT\BOLLARD\LBOLL001

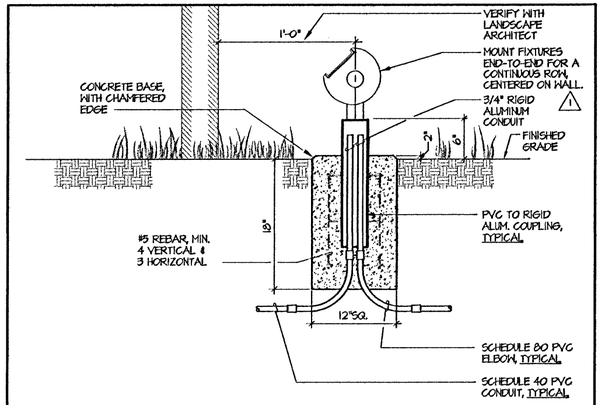

EXTERIOR LINEAR UPLIGHT MOUNTING (2/E1.1)
SCALE: NONE
FILE: L:\LIGHT\GROUND\LGROU013 (MOD.)

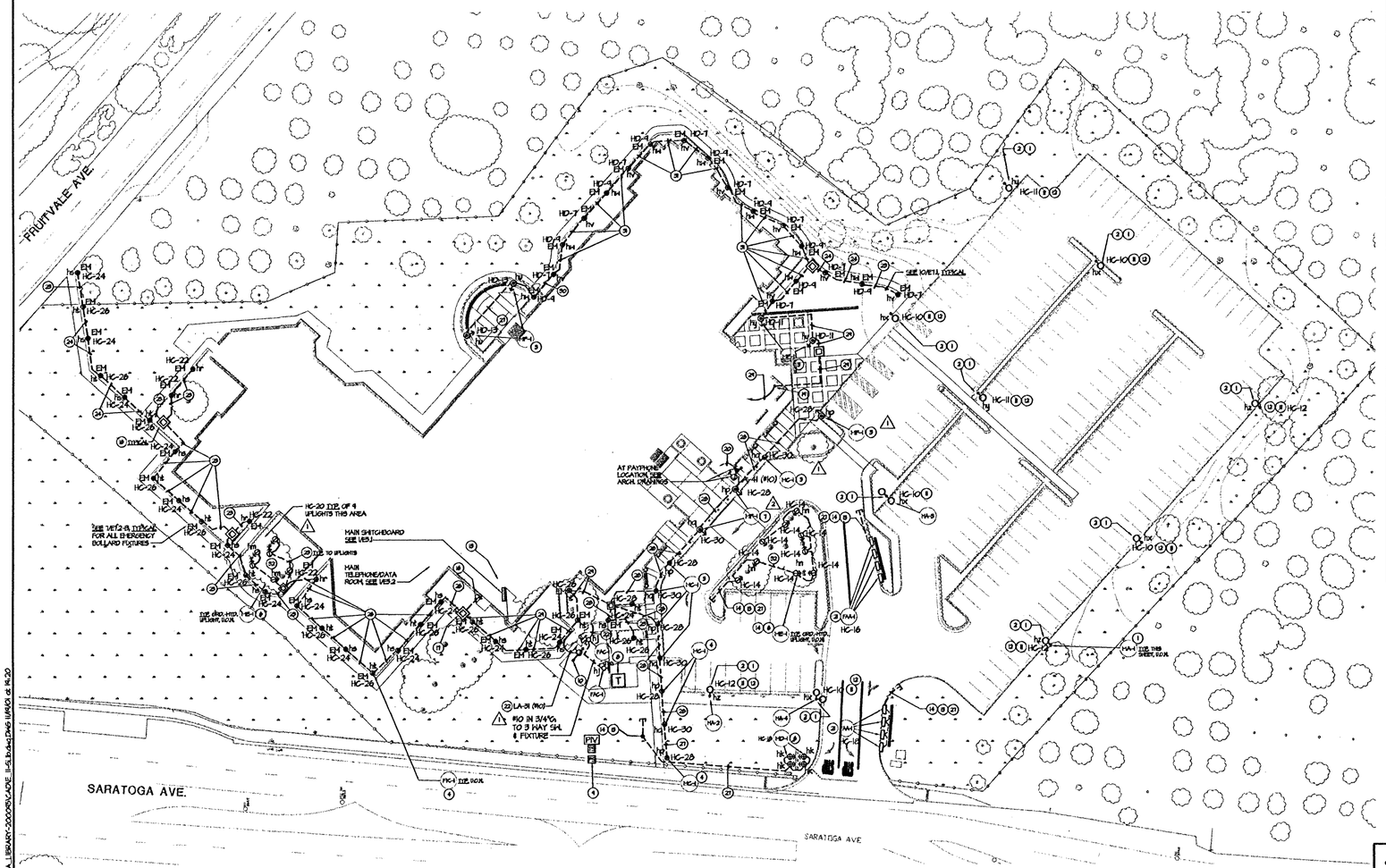

SITE PLAN - ELECTRICAL (1/E-1.1)
SCALE: 1" = 30'
FILE: ... Xref\SITE-10-1T-01

NUMBERED SHEET NOTES

1. SEE PHASE 1 DRAWINGS FOR POLEBASE.
2. PROVIDE AND INSTALL LIGHT FIXTURE AND POLE ON POLE BASE INSTALLED IN PHASE 1. SEE PHASE 1 DRAWINGS. △1
3. POLE BASE MOUNTING, SEE 3/E1.2.
4. BOLLARD BASE MOUNTING, SEE 13/E1.2.
5. BOLLARD BASE MOUNTING, SEE 3/E1.1. △1
6. FOR GROUND MOUNTED FIXTURE, SEE 14/E1.2.
7. POLE BASE MOUNTING, SEE 3/E1.2. △1
8. PG&E PAD MOUNT TRANSFORMER.
9. SPRINKLER FIRE ALARM DEVICES VERIFY LOCATION, SEE 1/E5.3. EXTEND CONDUITS TO DEVICES. PROVIDE AND INSTALL WIRING PER 1/E5.3.
10. IRRIGATION CONTROLLER, VERIFY LOCATION.
11. PROVIDE AND INSTALL WIRING TO LIGHT FIXTURES FROM THE PANEL BOARD INDICATED VIA THE LIGHTING CONTROL RELAY PANEL AND CONNECT COMPLETE. SEE 1/E6.3 AND "LCP" SCHEDULES. THE WIRING SHALL BE INSTALLED IN THE SITE CONDUIT INSTALLED IN PHASE 1.
12. WIRE SIZE TO BE #8AWG THROUGHOUT BRANCH CIRCUIT LENGTH.
13. EXTEND ALL CONDUITS STUBBED UP AS PART OF PHASE 1 TO THE PANEL BOARDS AND CONTROL PANELS. PROVIDE AND INSTALL ALL CONDUIT AND WIRING AS REQUIRED. SEE PHASE 1 DRAWINGS.
14. PROVIDE AND INSTALL 1" CONDUIT FROM (E) STUBOUT AT PLANTER AREA TO NEW LIGHT FIXTURES AS INDICATED. PROVIDE AND INSTALL WIRING TO LIGHT FIXTURES FROM PANELBOARD INDICATED VIA THE LIGHTING CONTROL RELAY PANEL AND CONNECT COMPLETE. SEE 1/E6.3 AND "LCP" SCHEDULES. SEE NOTE (13) BELOW FOR ADDITIONAL CONDUIT REQUIREMENTS.
15. WIRE TO BE #10 AWG THROUGH OUT CIRCUIT LENGTH.
16. (E) CONDUITS TO ELECTRICAL ROOM, SEE PHASE 1 DRAWINGS. INSTALL HOMERUN WIRING IN THESE CONDUITS. ALSO SEE NOT 13 ABOVE.
17. (E) PULLBOX, SEE PHASE 1 DRAWINGS.
18. PROVIDE AND INSTALL PULLBOXES WITH FULL TRAFFIC COVERS AS REQUIRED. COORDINATE LOCATION WITH LANDSCAPE. SUBMIT LOCATIONS OF PULLBOXES FOR APPROVAL PRIOR TO INSTALLATION.
19. CONDUIT TO RISE UP IN WALL TO CEILING. HOMERUN TO ELECTRICAL ROOM.
20. 3/4"C. WITH PULL WIRE TO MAIN TEL/DATA ROOM.
21. FLUORESCENT WALL UPLIGHT MOUNTED IN PLANTING ON REINFORCED, RAISED CONCRETE FOOTING. SEE 2/E1.1.
22. INSTALL WIRING IN CONDUITS INSTALLED AS PART OF PHASE 1. SEE NOTE 13 ABOVE.
23. 3#8, 1#12G IN 1"C.
24. 6#8, 1#12G IN 1"C.
25. 9#8, 1#12G IN 1 1/4"C.
26. 11#8, 1#12G IN 1 1/4"C.
27. 2#8, 1#12G IN 3/4"C.
28. 4#8, 1#12G IN 1"C.
29. 10#8, 1#12G IN 1 1/4"C.
30. 5#8, 1#12G IN 1"C.
31. 8#8, 1#12G IN 1 1/4"C.
32. MOUNT TREE LIGHTS 2'-0" FROM TRUNK TO CENTERLINE OF FIXTURE. △1

SEE 3/E2.1C FOR EXTERIOR LIGHTING CONTROLS.

NOTE:
SEE PHASE 1 DRAWINGS FOR CONDUIT AND POLE BASES INSTALLED AS PART OF PHASE. SEE LANDSCAPE DRAWINGS L1 AND L2 FOR EXACT LOCATION OF SITE LIGHTING FIXTURES.

FIELD PAOLI

Architecture
1045 Sansome St.
Suite 206
San Francisco
California, 94111
Tel. 415. 788. 6606
Fax 415. 788. 6650

SARATOGA COMMUNITY LIBRARY

SANTA CLARA COUNTY LIBRARY

13650 Saratoga Avenue
Saratoga, California 95070

O'MAHONY & MYER
ELECTRICAL and LIGHTING DESIGN
4340 REDWOOD HWY., SUITE 245
SAN RAFAEL, CALIFORNIA 94903
(415) 492-0420/FAX (415) 479-9662
www.ommconsulting.com

DATE	JANUARY 25, 2002

REVISIONS
CONFORM SET RE-PLOT

1	ADDENDUM #1	11/20/01
2	ADDENDUM #2	12/03/01
3	ADDENDUM #3	12/04/01
4	ADDENDUM #4	12/27/01

TRUE NORTH
PROJ. NORTH

SITE PLAN - ELECTRICAL

SCALE	1" = 30'
DRAWN BY	OO/JL/TV
CHECKED BY	NT/PC
JOB NO.	200095

PHASE - 2

SHEET NO. **E-1.1**

All drawings and written material appearing herein constitute the original and unpublished work of the architect and the same may not be duplicated, used, or disclosed without the written consent of the architect ©Field Paoli

SARATOGA_LIBRARY_200095
(USING ARIAL-SHX FOR MISSING Albertus(Sans)-FONT)
FILE: P:\200095\SARATOGA_LIBRARY-200095\ACAD_E-S-Base\Dwg 1/8"=1'-0" at 14:20

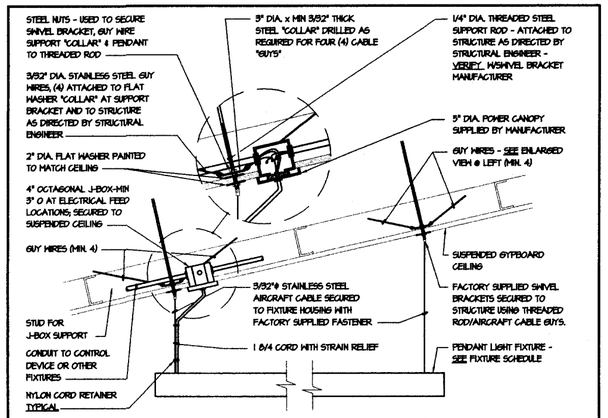

PENDANT FIXTURE MOUNTING - SLOPED GYPBOARD CEILING (2/E2.1A)
SCALE: NONE
FILE: L:\Light\PENDANT\pend028.dwg

NUMBERED SHEET NOTES

1. MOUNT BOTTOM OF FIXTURE AT 10'-0" AFF.
2. ALIGN OUTSIDE EDGE OF FIXTURE WITH SOFFIT FACE.
3. MOUNT BOTTOM OF FIXTURE AT 8'-0" AFF.
4. MOUNT IN FACE OF SOFFIT EDGE ABOVE.
5. SEE DETAIL 15/E7.1.
6. SEE DETAIL 2/E-2.1A.

NOTE: ALL FIXTURES DESIGNATED "EM" SHALL HAVE EMERGENCY BALLAST, TYPICAL THIS PROJECT U.O.N. SEE SPECIFICATIONS AND FIXTURE SCHEDULE.

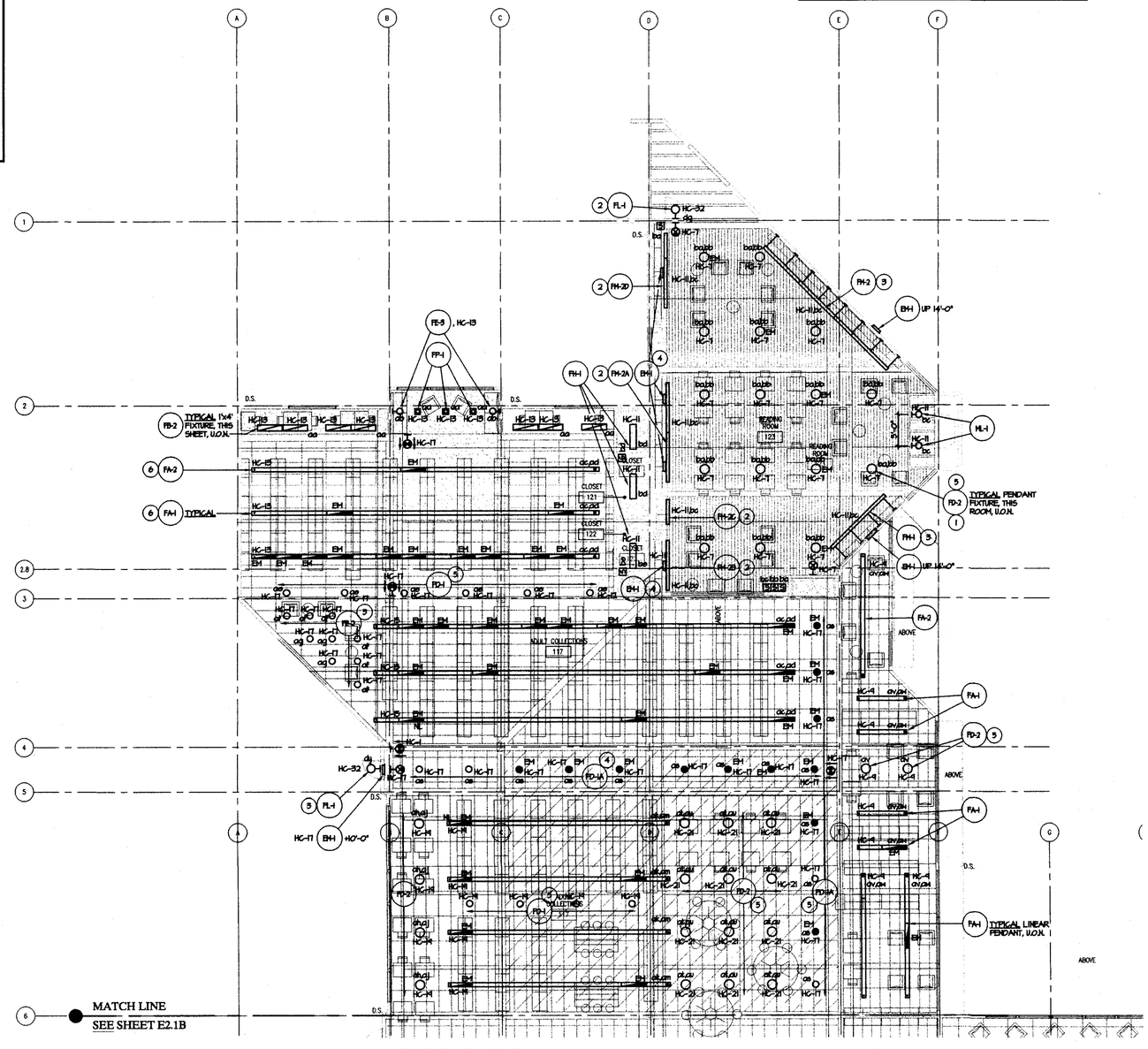

FLOOR PLAN - QUAD A - LIGHTING (1/E2.1A)
SCALE: 1/8" = 1'-0"
FILE: ..Xref\rcp-10-18-01

FIELD PAOLI

Architecture
1045 Sansome St.
Suite 206
San Francisco
California, 94111
Tel. 415. 788. 6606
Fax 415. 788. 6650

SARATOGA COMMUNITY LIBRARY

SANTA CLARA COUNTY LIBRARY

13650 Saratoga Avenue
Saratoga, California 95070

O'MAHONY & MYER
ELECTRICAL and LIGHTING DESIGN
4340 REDWOOD HWY., SUITE 245
SAN RAFAEL, CALIFORNIA 94903
(415) 492-0420/FAX (415) 479-9662
www.omaheyandmyer.com

DATE	OCTOBER 26, 2001
REVISIONS	BID SET

FLOOR PLAN - QUAD A - LIGHTING PLAN

SCALE	AS SHOWN
DRAWN BY	TV/KK/RS
CHECKED BY	NT/PC
JOB NO.	200095

PHASE - 2

SHEET NO. **E-2.1A**

All drawings and written material appearing herein constitute the original and unpublished work of the architect and the same may not be duplicated, used, or disclosed without the written consent of the architect ©Field Paoli

SARATOGA_LIBRARY_200095
(USING ARIAL SIX FOR MISSING AbortutCirBlnd FONT)
FILE: P:\200095\SARATOGA_LIBRARY-200095\CADE_2\A-E1.6.dwg\PAD 10/30/01 @ 15:04

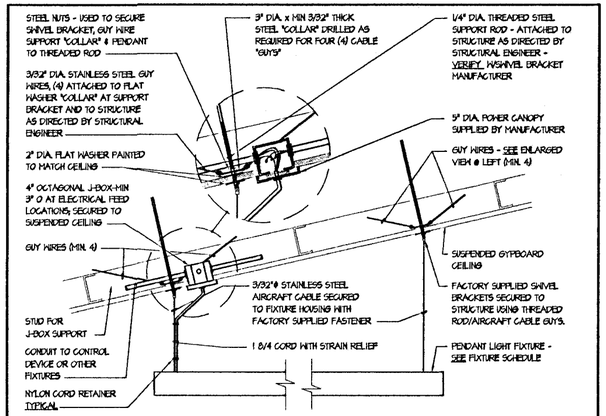

PENDANT FIXTURE MOUNTING - SLOPED GYPBOARD CEILING (2/E2A)
SCALE: NONE
FILE: L:\light\PENDANT\pend028.dwg

NUMBERED SHEET NOTES

1. MOUNT BOTTOM OF FIXTURE AT 10'-0" AFF.
2. ALIGN OUTSIDE EDGE OF FIXTURE WITH SOFFIT FACE.
3. MOUNT BOTTOM OF FIXTURE AT 8'-0" AFF.
4. MOUNT IN FACE OF SOFFIT EDGE ABOVE.
5. SEE DETAIL 15/E7.1.
6. SEE DETAIL 2/E-2.1A.

NOTE: ALL FIXTURES DESIGNATED "EM" SHALL HAVE EMERGENCY BALLAST, TYPICAL THIS PROJECT U.O.N. SEE SPECIFICATIONS AND FIXTURE SCHEDULE.

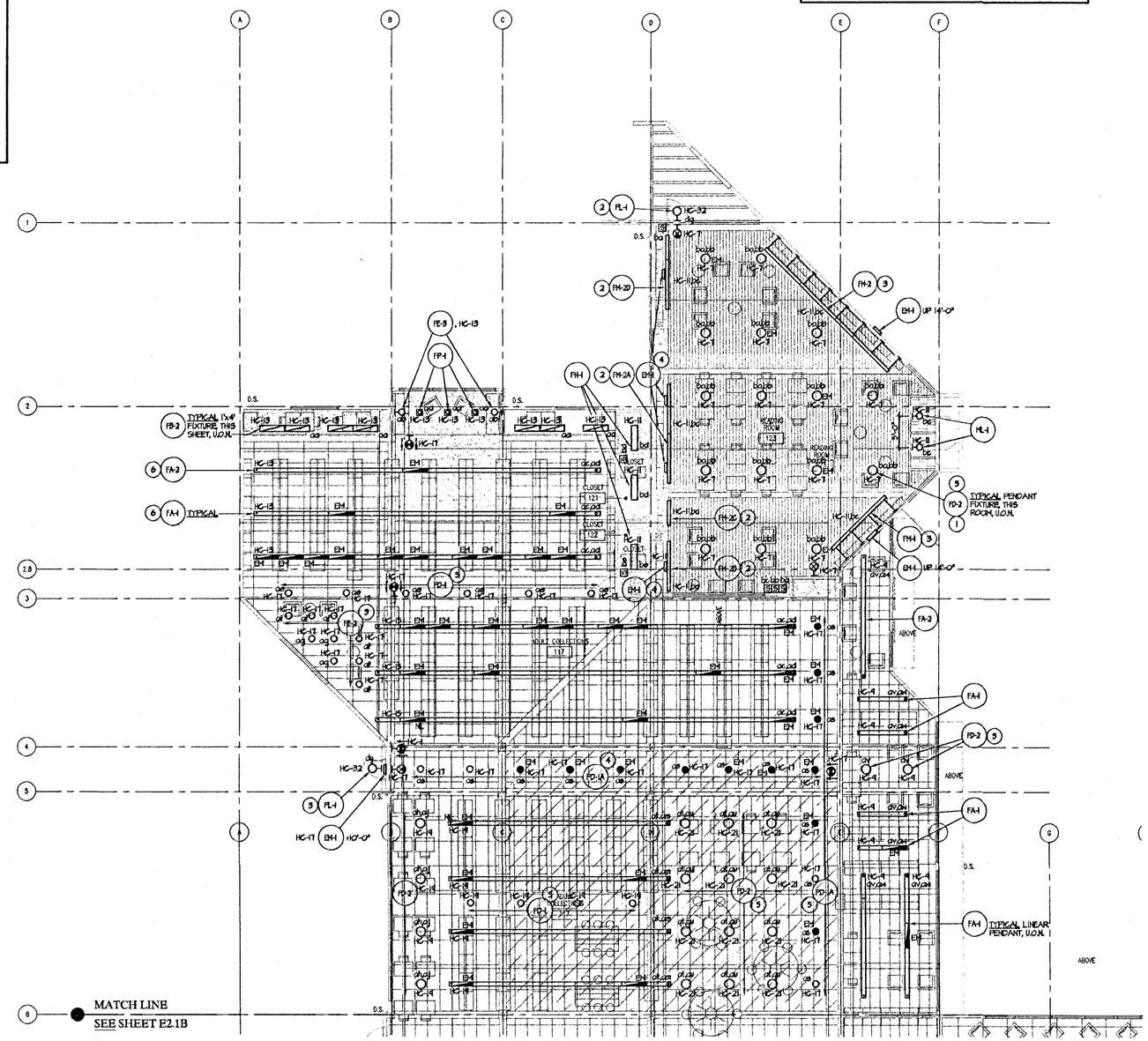

FLOOR PLAN - QUAD A - LIGHTING (1/E2A)
SCALE: 1/8" = 1'-0"
FILE: ...Xref\rcp-10-18-01

FIELD PAOLI

Architecture
1045 Sansome St.
Suite 206
San Francisco
California, 94111
Tel. 415. 788. 6606
Fax 415. 788. 6650

SARATOGA COMMUNITY LIBRARY

SANTA CLARA COUNTY LIBRARY

13650 Saratoga Avenue
Saratoga, California 95070

O'MAHONY & MYER
ELECTRICAL and LIGHTING DESIGN
4340 REDWOOD HWY, SUITE 245
SAN RAFAEL, CALIFORNIA 94903
(415) 492-0420/FAX (415) 479-9662
www.ommconsulting.com

DATE	OCTOBER 28, 2001
REVISIONS	
BID SET	

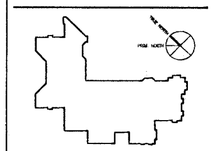

FLOOR PLAN - QUAD A - LIGHTING PLAN

SCALE	AS SHOWN
DRAWN BY	TV/KK/RS
CHECKED BY	NT/PC
JOB NO.	200095

PHASE - 2

SHEET NO. **E-2.1A**

All drawings and written material appearing herein constitute the original and unpublished work of the architect and the same may not be duplicated, used, or disclosed without the written consent of the architect ©Field Paoli

SARATOGA LIBRARY 200095
USING ARIAL SYM FOR MISSING AbelnuEGrnMed FONTS
FILE: P:\200095\SARATOGA LIBRARY-200095\CADE_2\A-E\E2.1A.DWG 10/29/01 at 15:04

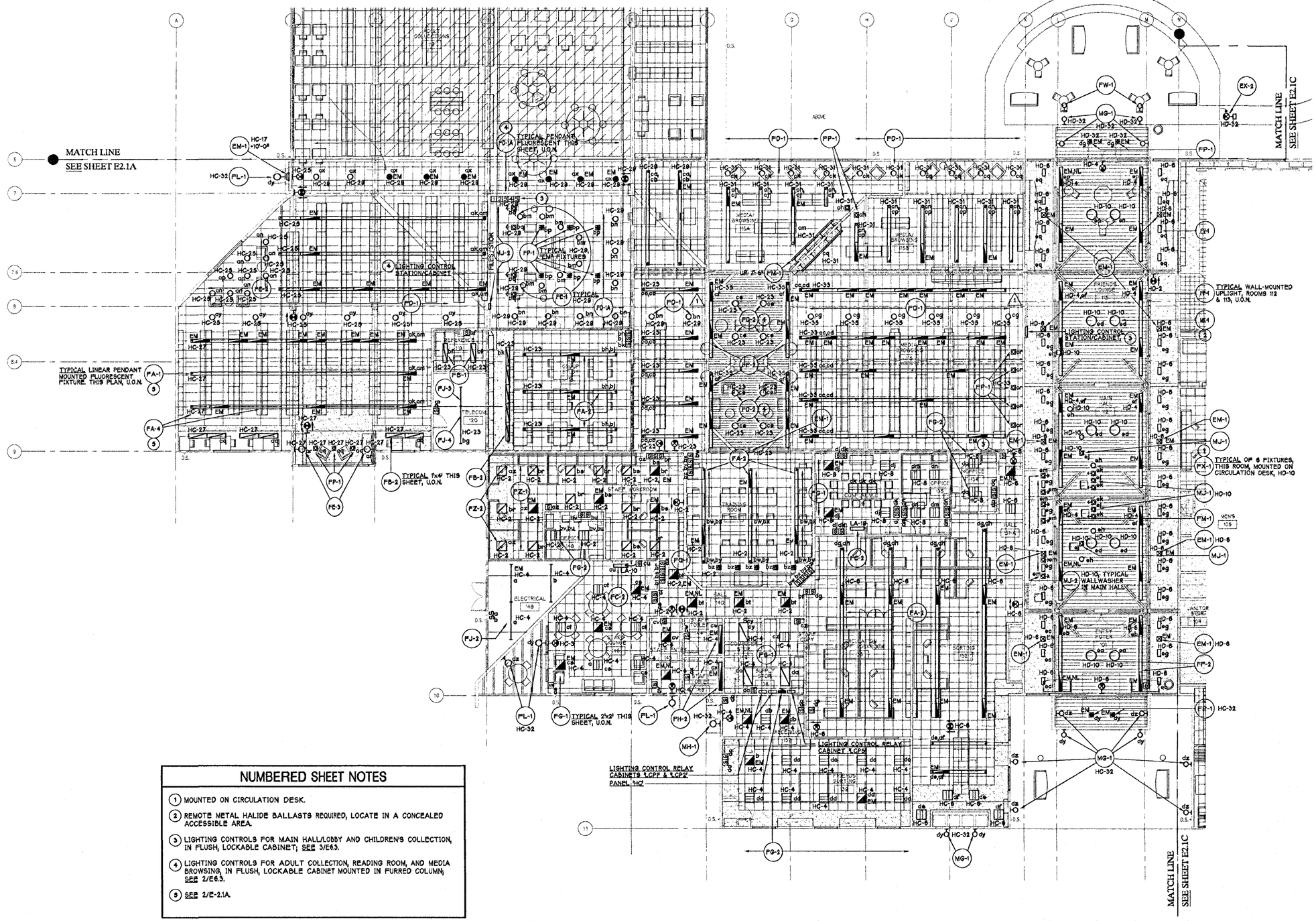

NUMBERED SHEET NOTES

1. MOUNTED ON CIRCULATION DESK.
2. REMOTE METAL HALIDE BALLASTS REQUIRED, LOCATE IN A CONCEALED ACCESSIBLE AREA.
3. LIGHTING CONTROLS FOR MAIN HALL/LOBBY AND CHILDREN'S COLLECTION, IN FLUSH, LOCKABLE CABINET; SEE 3/E6.3.
4. LIGHTING CONTROLS FOR ADULT COLLECTION, READING ROOM, AND MEDIA BROWSING, IN FLUSH, LOCKABLE CABINET MOUNTED IN FURRED COLUMN; SEE 2/E6.3.
5. SEE 2/E-2.1A.

FLOOR PLAN - QUAD B - LIGHTING (1 / E-1.B)
SCALE: 1/8" = 1'-0"
FILE: ... Xref\rcp-10-29-01

NOTE:
ALL FIXTURES DESIGNATED "EM" SHALL HAVE EMERGENCY BALLAST, TYPICAL THIS PROJECT, U.O.N. SEE SPECIFICATIONS AND FIXTURE SCHEDULE.

FIELD PAOLI

Architecture
1045 Sansome St.
Suite 206
San Francisco
California, 94111
Tel. 415. 788. 6606
Fax 415. 788. 6650

SARATOGA COMMUNITY LIBRARY

SANTA CLARA COUNTY LIBRARY

13650 Saratoga Avenue
Saratoga, California 95070

O'MAHONY & MYER
ELECTRICAL and LIGHTING DESIGN
4340 REDWOOD HWY, SUITE 245
SAN RAFAEL, CALIFORNIA 94903
(415) 492-0420/FAX (415) 479-9662
www.ommconsulting.com

DATE	JANUARY 25, 2002

REVISIONS
CONFORM SET RE-PLOT

1	ADDENDUM #1	11/20/01
2	ADDENDUM #2	12/03/01
3	ADDENDUM #3	12/04/01
4	ADDENDUM #4	12/27/01

FROM NORTH

FLOOR PLAN - QUAD B - LIGHTING PLAN

SCALE	1/8" = 1'-0"
DRAWN BY	TV/JL
CHECKED BY	NT/PC
JOB NO.	200095

PHASE - 2

SHEET NO. **E-2.1B**

All drawings and written material appearing herein constitute the original and unpublished work of the architect and the same may not be duplicated, used, or disclosed without the written consent of the architect ©Field Paoli

SARATOGA_LIBRARY_200095
(USING ARIAL.SHX FOR MISSING Aberlue\arialsx FONT)
P:\R_PJ\2000\SARATOGA_LIBRARY-200095\CAD\E-2\E-2.1b.dwg DWG 11/03/01 at 14:31

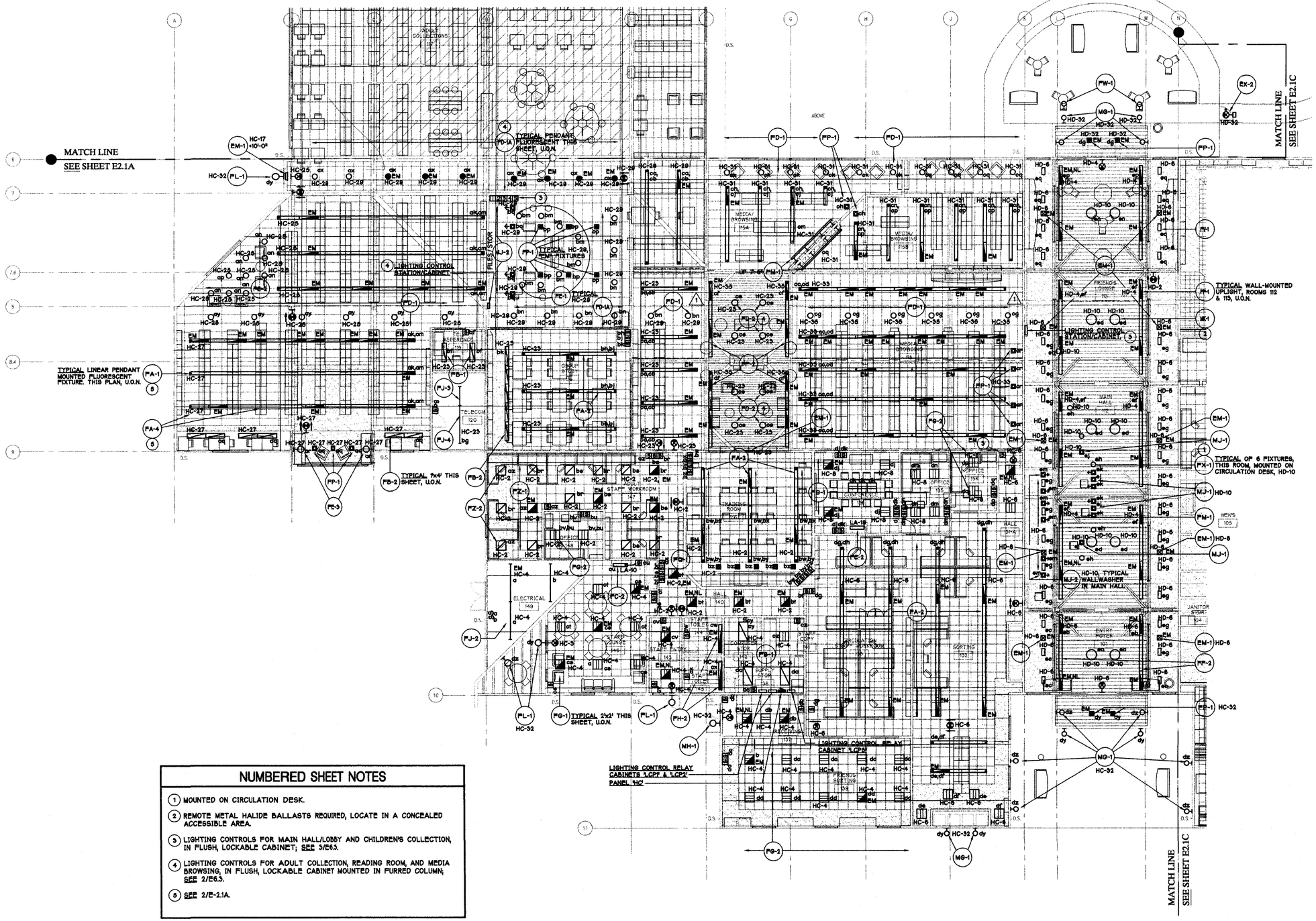

NUMBERED SHEET NOTES

1. MOUNTED ON CIRCULATION DESK.
2. REMOTE METAL HALIDE BALLASTS REQUIRED, LOCATE IN A CONCEALED ACCESSIBLE AREA.
3. LIGHTING CONTROLS FOR MAIN HALL/LOBBY AND CHILDREN'S COLLECTION, IN FLUSH, LOCKABLE CABINET; SEE 3/E6.3.
4. LIGHTING CONTROLS FOR ADULT COLLECTION, READING ROOM, AND MEDIA BROWSING, IN FLUSH, LOCKABLE CABINET MOUNTED IN FURRED COLUMN; SEE 2/E6.3.
5. SEE 2/E-2.1A.

FLOOR PLAN - QUAD B - LIGHTING (1/E1B)
SCALE: 1/8" = 1'-0"
FILE: ... Xref\rcp-10-29-01

NOTE:
ALL FIXTURES DESIGNATED "EM" SHALL HAVE EMERGENCY BALLAST, TYPICAL THIS PROJECT, U.O.N. SEE SPECIFICATIONS AND FIXTURE SCHEDULE.

FIELD PAOLI

Architecture
1045 Sansome St.
Suite 206
San Francisco
California, 94111
Tel. 415. 788. 6606
Fax 415. 788. 6650

SARATOGA COMMUNITY LIBRARY

SANTA CLARA COUNTY LIBRARY

13650 Saratoga Avenue
Saratoga, California 95070

O'MAHONY & MYER
ELECTRICAL and LIGHTING DESIGN
4340 REDWOOD HWY., SUITE 245
SAN RAFAEL, CALIFORNIA 94903
(415) 492-0420/FAX (415) 479-9662
www.omnconsulting.com

DATE	JANUARY 25, 2002

REVISIONS
CONFORM SET RE-PLOT

1	ADDENDUM #1	11/20/01
2	ADDENDUM #2	12/03/01
3	ADDENDUM #3	12/04/01
4	ADDENDUM #4	12/27/01

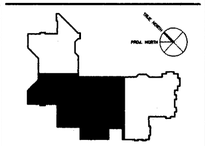

FLOOR PLAN - QUAD B - LIGHTING PLAN

SCALE	1/8" = 1'-0"
DRAWN BY	TV/JL
CHECKED BY	NT/PC
JOB NO.	200095

PHASE - 2

SHEET NO. E-2.1B

All drawings and written material appearing herein constitute the original and unpublished work of the architect and the same may not be duplicated, used, or disclosed without the written consent of the architect ©Field Paoli

SARATOGA_LIBRARY_200095
(USING ARIAL SHX FOR MISSING AbarlusEarlyBold FONT)
FILE: P:\200095\SARATOGA_LIBRARY-200095\CAD\E_2B-Sh.dwg\DWG 11/03/01 at 14:31

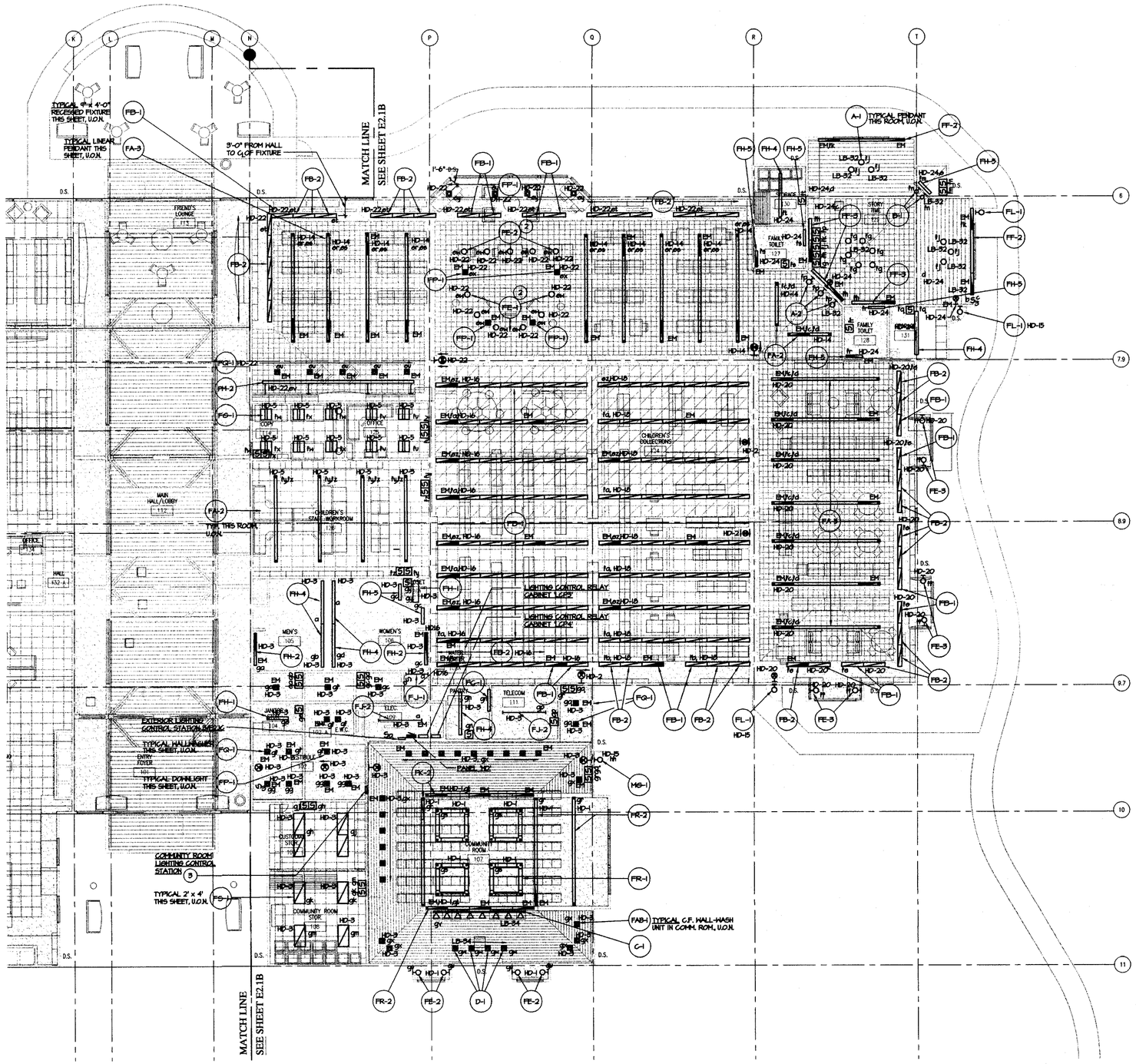

FLOOR PLAN - QUAD C - LIGHTING

SCALE: 1/8"=1'-0"
FILE: ... Xref\rcp-10-18-01

1 / E-2.1C

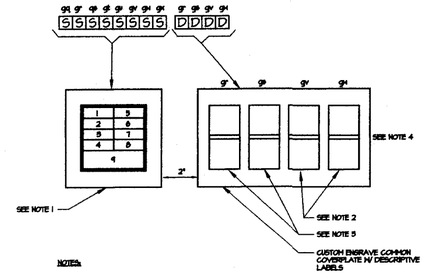

NOTES:

1. 6.E. DATALINE SMARTWIRE 'SMS' SWITCHPLATE. SEE ENGRAVING SCHEDULE BELOW. CUSTOM ENGRAVE EACH PUSHBUTTON WITH DESCRIPTIVE LABEL AS NOTED OR AS DIRECTED/APPROVED BY THE ARCHITECT. FILL ENGRAVINGS WITH BLACK ENAMEL PAINT - SEE SPECIFICATIONS.
2. LUTRON NOVA T-STAR PRESET INCANDESCENT DIMMER # NT-1000-WH
3. LUTRON NOVA T-STAR PRESET FLUORESCENT DIMMER # NTF-103P-277-WH.
4. PROVIDE A SEPARATE NEUTRAL FOR EACH DIMMER SWITCH. ALL DIMMED LIGHT FIXTURES SHALL HAVE A LOW VOLTAGE SWITCH INSTALLED AHEAD OF THE DIMMER SWITCH SO THAT LIGHTS WILL BE TURNED OFF AS PART OF THE BUILDING LIGHTING CONTROL SYSTEM. DIMMER SWITCHES SHALL BE FULLY RATED, NO PINS BROKEN, PRESET, WHITE FINISH AS CALLED FOR IN NOTES 2 AND 3. GANG TOGETHER UNDER A COMMON FACEPLATE.

ENGRAVING SCHEDULE - COMMUNITY ROOM

DESIG.	LABEL	SWITCH	DESIG.	LABEL	SWITCH
1	HALLWASHERS	ga	5	LINEAR PENDANTS	gf
2	LINEAR PENDANTS	gr	6	DECORATIVE SCONCES	gr
3	SQUARE PENDANTS	gp	7	TRACK LIGHTS	gr
4	RM. HALLWASHERS	gk	8	PODIUM HALLWASHERS	gh
9	COMMUNITY ROOM MASTER				gag gag gar gar

COMMUNITY ROOM 107 LIGHTING CONTROL STATION

SCALE: NONE
FILE:

2 / E-2.1C

NUMBERED SHEET NOTES

1. MOUNT FIXTURE AT __'-__" A.F.F. TO BOTTOM OF FIXTURE.
2. SEE DETAIL 15/E7.1
3. LIGHTING CONTROLS FOR COMMUNITY ROOM MOUNTED FLUSH IN WALL; SEE DETAIL 2/E2.1C.

NOTE: ALL FIXTURES DESIGNATED "EM" SHALL HAVE EMERGENCY BALLAST, TYPICAL THIS PROJECT U.O.N. SEE SPECIFICATIONS AND FIXTURE SCHEDULE.

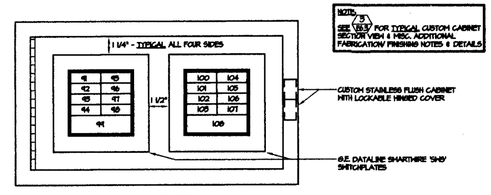

NOTE: 3
SEE 19/E.7 FOR TYPICAL CUSTOM CABINET SECTION VIEW & MISC. ADDITIONAL FABRICATION/FINISHING NOTES & DETAILS

FRONT VIEW

ENGRAVING SCHEDULE - EXTERIOR

DESIG.	LABEL	SWITCH	DESIG.	LABEL	SWITCH
41	PARKING	hx	43	BUILDING	hh
42	PARKING	hg	46	BUILDING	dg
43	PARKING	hz	47	BUILDING	dz
44	SIGNAGE	hk	48	GROUND LIGHTS	hs/m
49	PARKING & BUILDING LIGHTS				hx/hg hz/hk dg/dz

NOTE: ALL 6.E. 'SMS' DATALINE PUSHBUTTON SWITCHES ARE TO BE CUSTOM ENGRAVED - BLACK INFILL ON WHITE PUSHBUTTONS - AS NOTED IN SCHEDULES ABOVE OR AS DIRECTED/APPROVED BY THE ARCHITECT.

ENGRAVING SCHEDULE - EXTERIOR

DESIG.	LABEL	SWITCH	DESIG.	LABEL	SWITCH
100	HALLWAY - NORTH	hs	104	HALLWAY - SOUTH	hv
101	HALLWAY - NORTH	hi	105	HALLWAY - SOUTH	hw
102	HALLWAY - NORTH	hr	106	HALLWAY - SOUTH	hu
103	HALLWAY - WEST	hp	107	HALLWAY - WEST	hq
108	HALLWAY				hs/hi hr/hp dv/dw hu/hq

NOTE: ALL 6.E. 'SMS' DATALINE PUSHBUTTON SWITCHES ARE TO BE CUSTOM ENGRAVED - BLACK INFILL ON WHITE PUSHBUTTONS - AS NOTED IN SCHEDULES ABOVE OR AS DIRECTED/APPROVED BY THE ARCHITECT.

EXTERIOR MASTER LIGHTING CONTROL STATION

SCALE: NONE
FILE:

3 / E-2.1C

FIELD PAOLI

Architecture
1045 Sansome St.
Suite 206
San Francisco
California, 94111
Tel. 415. 788. 6606
Fax 415. 788. 6650

SARATOGA COMMUNITY LIBRARY

SANTA CLARA COUNTY LIBRARY

13650 Saratoga Avenue
Saratoga, California 95070

O'MAHONY & MYER
ELECTRICAL and LIGHTING DESIGN
4340 REDWOOD HWY. SUITE 245
SAN RAFAEL, CALIFORNIA 94903
(415) 492-0420/FAX (415) 479-9662
www.omaheonsalting.com

DATE	OCTOBER 28, 2001
REVISIONS	
BID SET	

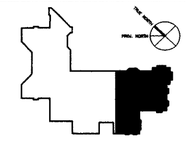

FLOOR PLAN - QUAD C - LIGHTING PLAN

SCALE	1/8" = 1'-0"
DRAWN BY	TV/KK/JL/OO
CHECKED BY	NT/PC
JOB NO.	200095

PHASE - 2

SHEET NO. **E-2.1C**

All drawings and written material appearing herein constitute the original and unpublished work of the architect and the same may not be duplicated, used, or disclosed without the written consent of the architect ©Field Paoli

SARATOGA_LIBRARY_200095

(USING ARIAL SIX FOR MISSING Aberne\Ecrb\ab1 FONT)

FILE: P:\200095\SARATOGA LIBRARY-200095\CADE 2\C-Sl\dwg\DWG 10/30/01 at 11:05

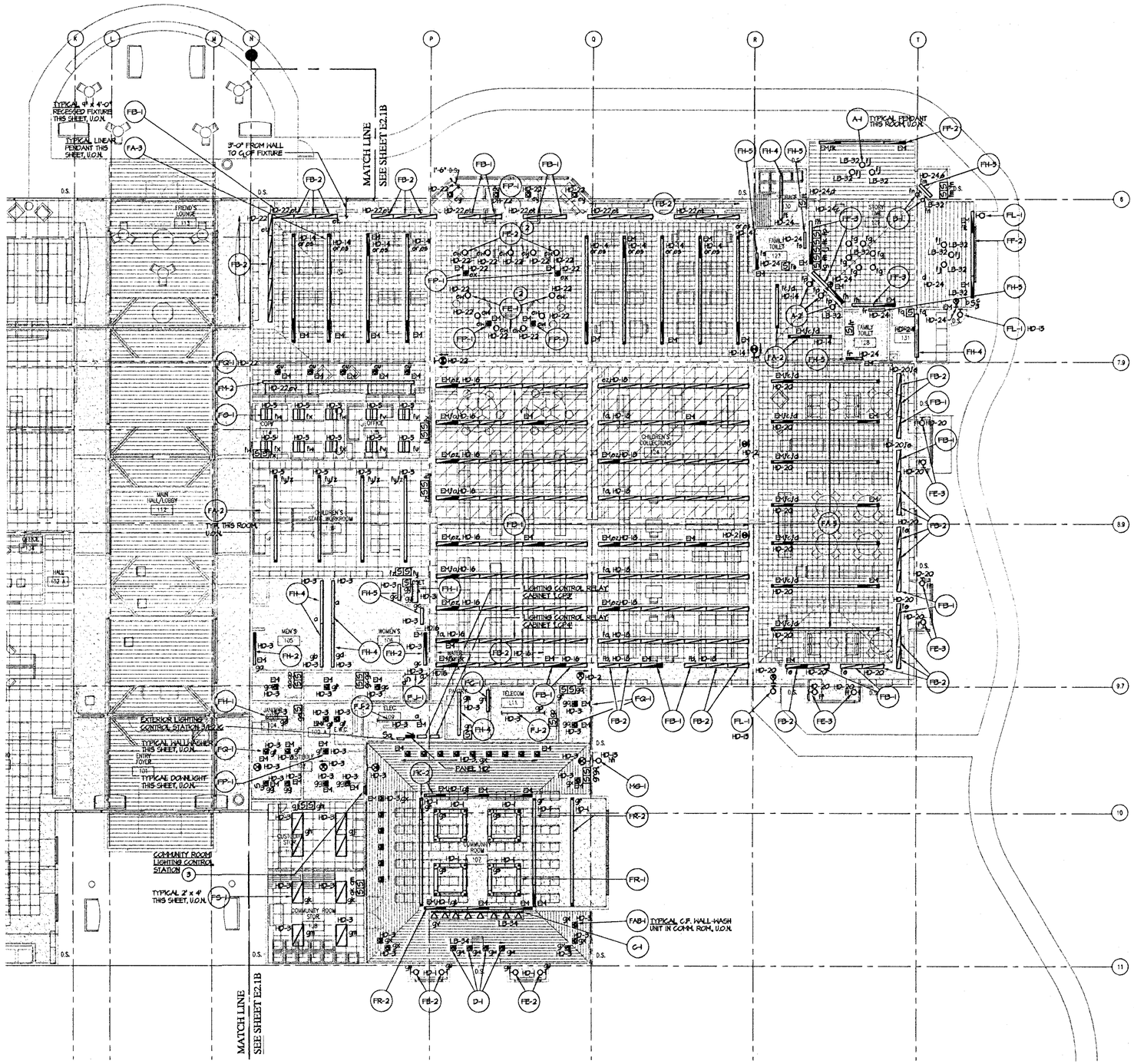

FLOOR PLAN - QUAD C - LIGHTING
SCALE: 1/8"=1'-0"
FILE: _Xref\rcp-10-18-01

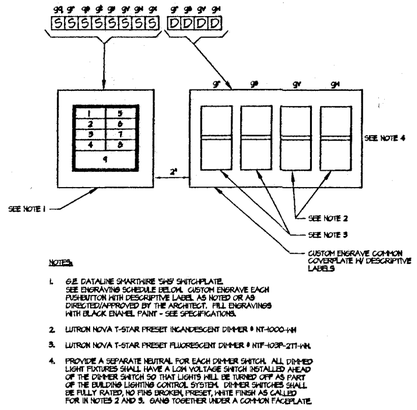

NOTES:

1. G.E. DATALINE SMARTWIRE 'SHS' SWITCHPLATE. SEE ENGRAVING SCHEDULE BELOW. CUSTOM ENGRAVE EACH PUSHBUTTON WITH DESCRIPTIVE LABEL AS NOTED OR AS DIRECTED/APPROVED BY THE ARCHITECT. FILL ENGRAVINGS WITH BLACK ENAMEL PAINT - SEE SPECIFICATIONS.
2. LUTRON NOVA T-STAR PRESET INCANDESCENT DIMMER # NT-1000-WH
3. LUTRON NOVA T-STAR PRESET FLUORESCENT DIMMER # NTF-103P-277-WH.
4. PROVIDE A SEPARATE NEUTRAL FOR EACH DIMMER SWITCH. ALL DIMMED LIGHT FIXTURES SHALL HAVE A LOW VOLTAGE SWITCH INSTALLED AHEAD OF THE DIMMER SWITCH SO THAT LIGHTS WILL BE TURNED OFF AS PART OF THE BUILDING LIGHTING CONTROL SYSTEM. DIMMER SWITCHES SHALL BE FULLY RATED NO FANS BROWN, PRESET, WHITE FINISH AS CALLED FOR IN NOTES 2 AND 3. GANG TOGETHER UNDER A COMMON FACEPLATE.

ENGRAVING SCHEDULE - COMMUNITY ROOM

DESIG.	LABEL	SWITCH	DESIG.	LABEL	SWITCH
1	HALLWASHERS	gq	5	LINEAR PENDANTS	gt
2	LINEAR PENDANTS	gr	6	DECORATIVE SCONCES	gu
3	SQUARE PENDANTS	gs	7	TRACK LIGHTS	gv
4	RM. HALLWASHERS	gx	8	PODIUM HALLWASHERS	gw
9	COMMUNITY ROOM MASTER				gq/gr gs/gt gu/gv gx/gw

COMMUNITY ROOM 107 LIGHTING CONTROL STATION 2 E-2.1C
SCALE: NONE
FILE:

NUMBERED SHEET NOTES

1. MOUNT FIXTURE AT __'-__" A.F.F. TO BOTTOM OF FIXTURE.
2. SEE DETAIL 15/E7.1
3. LIGHTING CONTROLS FOR COMMUNITY ROOM MOUNTED FLUSH IN WALL, SEE DETAIL 2/E2.1C.

NOTE: ALL FIXTURES DESIGNATED "EM" SHALL HAVE EMERGENCY BALLAST, TYPICAL THIS PROJECT U.O.N. SEE SPECIFICATIONS AND FIXTURE SCHEDULE.

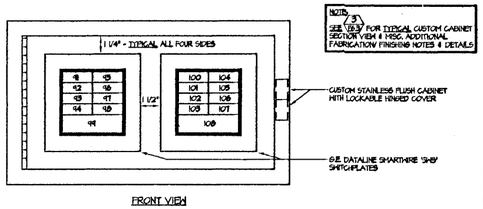

FRONT VIEW

ENGRAVING SCHEDULE - EXTERIOR

DESIG.	LABEL	SWITCH	DESIG.	LABEL	SWITCH
41	PARKING	hx	43	BUILDING	hh
42	PARKING	hy	46	BUILDING	dg
43	PARKING	hz	47	BUILDING	dz
44	SIGNAGE	hk	48	GROUND LIGHTS	hm/m
49	PARKING & BUILDING LIGHTS				hx/hy hz/hk dg/dz

NOTE: ALL G.E. 'SHS' DATALINE PUSHBUTTON SWITCHES ARE TO BE CUSTOM ENGRAVED - BLACK INFILL ON WHITE PUSHBUTTONS - AS NOTED IN SCHEDULES ABOVE OR AS DIRECTED/APPROVED BY THE ARCHITECT.

ENGRAVING SCHEDULE - EXTERIOR

DESIG.	LABEL	SWITCH	DESIG.	LABEL	SWITCH
100	HALLWAY - NORTH	hs	104	HALLWAY - SOUTH	hv
101	HALLWAY - NORTH	ht	105	HALLWAY - SOUTH	hw
102	HALLWAY - NORTH	hr	106	HALLWAY - SOUTH	hu
103	HALLWAY - WEST	hp	107	HALLWAY - WEST	hq
108	HALLWAY				hs/ht hr/hp hv/hw hu/hq

NOTE: ALL G.E. 'SHS' DATALINE PUSHBUTTON SWITCHES ARE TO BE CUSTOM ENGRAVED - BLACK INFILL ON WHITE PUSHBUTTONS - AS NOTED IN SCHEDULES ABOVE OR AS DIRECTED/APPROVED BY THE ARCHITECT.

EXTERIOR MASTER LIGHTING CONTROL STATION 3 E-2.1C
SCALE: NONE
FILE:

FIELD PAOLI

Architecture
1045 Sansome St.
Suite 206
San Francisco
California, 94111
Tel. 415. 788. 6606
Fax 415. 788. 6650

SARATOGA COMMUNITY LIBRARY

SANTA CLARA COUNTY LIBRARY

13650 Saratoga Avenue
Saratoga, California 95070

O'MAHONY & MYER
ELECTRICAL and LIGHTING DESIGN
4340 REDWOOD HWY., SUITE 245
SAN RAFAEL, CALIFORNIA 94903
(415) 492-0420/FAX (415) 479-9662
www.ommconsulting.com

DATE	OCTOBER 26, 2001
REVISIONS	BID SET

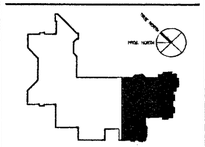

FLOOR PLAN - QUAD C - LIGHTING PLAN

SCALE	1/8" = 1'-0"
DRAWN BY	TV/KK/JL/OO
CHECKED BY	NT/PC
JOB NO.	200095

PHASE - 2

SHEET NO. E-2.1C

All drawings and written material appearing herein constitute the original and unpublished work of the architect and the same may not be duplicated, used, or disclosed without the written consent of the architect ©Field Paoli

SARATOGA_LIBRARY_200095
(USING ARIAL SKIN FOR MISSING AdobeHeiseiMinJ FONT)
FILE: P:\200095\SARATOGA LIBRARY-200095\CADFE 21C-E2.1b.dwg,PDMS 10/30/01 at 11:06

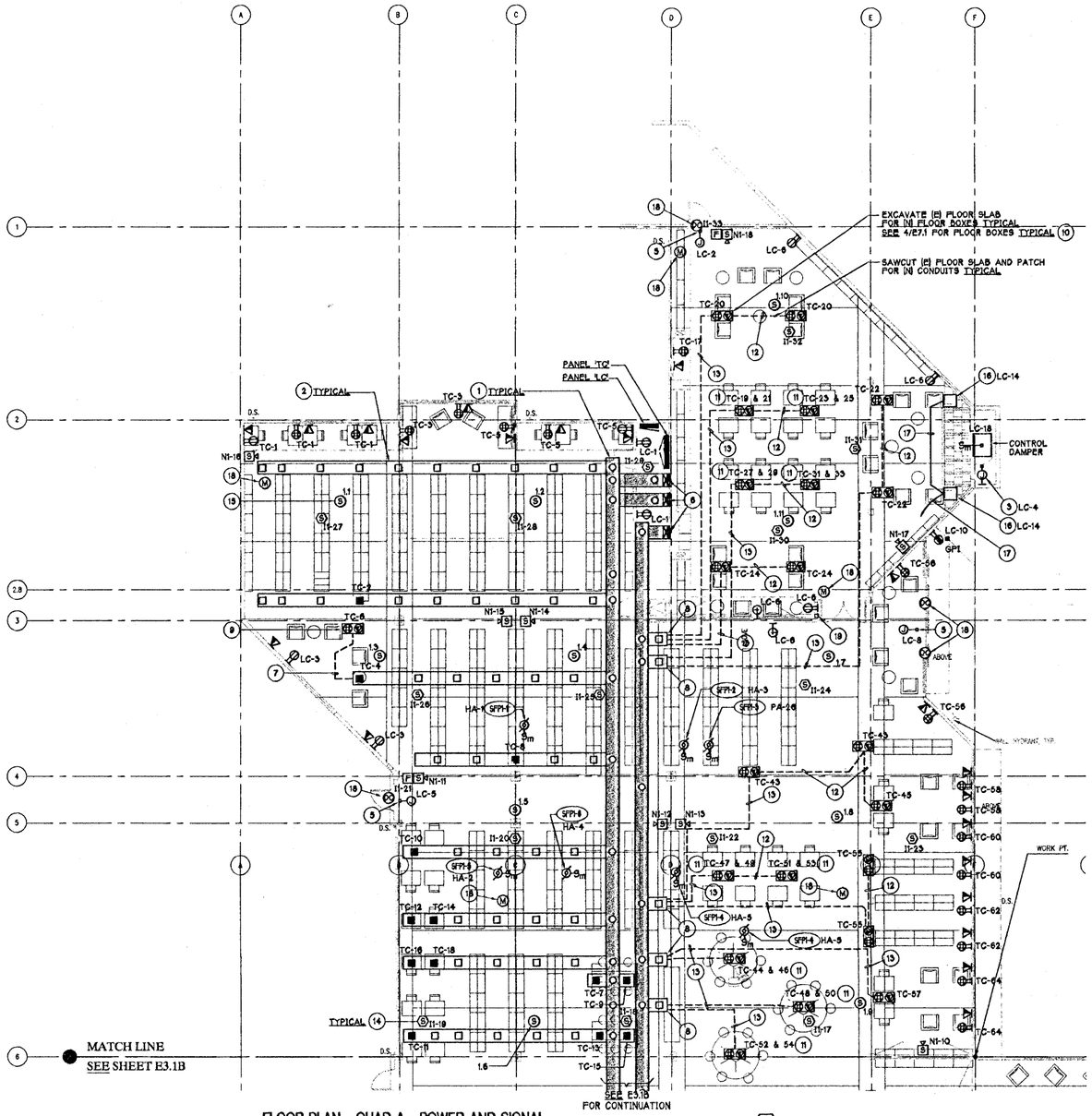

FLOOR PLAN - QUAD A - POWER AND SIGNAL
SCALE: 1/8" = 1'-0"
FILE: .. Xref\pln-10-18-01

NUMBERED SHEET NOTES

1. SEE PHASE 1 DRAWINGS FOR (3) COMPARTMENT, JUNCTION BOX HEADER.
2. SEE PHASE 1 DRAWINGS FOR (3) COMPARTMENT UNDER FLOOR DUCT. ALL ACTIVATED BOXES TO BE PROVIDED WITH TWO(2) 20 AMP DUPLEX RECEPTACLES AND TWO BLANK COVER PLATES FOR TEL/DATA COMPARTMENTS. NON-ACTIVATED BOXES TO BE PROVIDED WITH THREE BLANK COVERPLATES, HINGED COVER AND CARPET FLANGE WITH WIRE MANAGEMENT BLOCKS. OUTLETS AND ACCESSORIES TO BE PROVIDED AND INSTALLED AS PART OF THE PHASE 2 PROJECT. ALL 120VOLT WIRING TO BE PROVIDED AND INSTALLED AS PART OF THE PHASE 2 PROJECT. USE ONE COMPARTMENT ONLY FOR 120VOLT WIRING.
3. 120VOLT POWER CONNECTION TO FIRE PLACE. VERIFY LOCATION PRIOR TO ROUGH-IN.
4. NOT USED.
5. 120VOLT CIRCUIT FOR DOOR ALARM, VERIFY LOCATION PRIOR TO ROUGH-IN.
6. FLOOR DUCTS STUBBED UP 6 INCHES A.F.F. AS PART OF PHASE 1. PROVIDE AND INSTALL ALL REQUIRED RACEWAYS FROM THE STUB-UPS TO PANELBOARDS AS PART OF THE PHASE 2 PROJECT.
7. CONDUIT INSTALLED AS PART OF PHASE 1. PROVIDE AND INSTALL NEW WIRING TO OUTLET AS PART OF PHASE 2.
8. PROVIDE AND INSTALL CONDUIT AND WIRING FROM THE FLOOR DUCT TO THE FLOOR BOXES AS INDICATED. SEE PHASE 1 DRAWINGS FOR BLOCK OUTS AT FLOOR DUCT. PATCH FLOOR AT BLOCK OUTS AFTER CONDUIT INSTALLATION.
9. FLOOR BOX INSTALLED AS PART OF PHASE 1. PROVIDE AND INSTALL TWO(2) 20AMP DUPLEX RECEPTACLES, IN EACH FLOOR BOX, SEE 4/E7.1.
10. PROVIDE AND INSTALL NEW FLOOR BOXES IN EXISTING SLAB TYPICAL U.O.N.
11. CONNECT EACH 20AMP, DUPLEX OUTLET IN FLOOR BOX TO A DEDICATED CIRCUIT.
12. PROVIDE AND INSTALL THREE 3/4" CONDUITS IN FLOOR SLAB BETWEEN FLOOR BOXES AS INDICATED. ONE CONDUIT SHALL BE USED FOR 120 VOLT BRANCH CIRCUIT, AND TWO OF THE CONDUITS SHALL BE USED FOR TEL/DATA WIRING.
13. PROVIDE AND INSTALL THREE 1" CONDUITS IN FLOOR SLAB BETWEEN FLOOR BOX AND FLOOR DUCT SYSTEM AS INDICATED. TERMINATE ONE CONDUIT IN EACH OF THE THREE COMPARTMENTS IN THE FLOOR SYSTEM. ONE CONDUIT SHALL BE USED FOR 120VOLT BRANCH CIRCUIT, AND TWO OF THE CONDUITS SHALL BE USED FOR TEL/DATA WIRING.
14. FOR FIRE ALARM REQUIREMENTS, SEE 1/E5.3, SINGLE LINE DIAGRAM, FIRE ALARM.
15. PUBLIC ADDRESS SPEAKER, SEE 15/E7.2 TYPICAL.
16. MOTORIZED SHADES WITH OPERATOR, CONNECT COMPLETE PER THE MANUFACTURES REQUIREMENTS. VERIFY LOCATION OF EQUIPMENT.
17. PROVIDE AND INSTALL 6#18, IN 1/2" CONDUIT TO CONTROLLER, SEE NOTE 14 ABOVE.
18. PROVIDE AND INSTALL 1/2" CONDUIT TO SECURITY PANEL LOCATION IN ROOM 120, UP TO SIX DEVICE LOCATIONS MAY BE DAISY-CHAINED ON ONE 1/2" COUNDUIT HOMERUN.
19. SHADE CONTROLLER VERIFY LOCATION.

NOTE: SEE PHASE 1 DRAWINGS FOR ALL INSLAB WORK. ALL WIRING AND EXTENSIONS OF RACEWAYS SHALL BE CARRIED OUT AS PART OF THE PHASE 2 PROJECT.

NOTE: DEDICATED NEUTRAL REQUIRED FOR ALL RECEPTACLE BRANCH CIRCUITS. ALL RECEPTACLES CIRCUITS IN FLOOR DUCT SHALL BE WIRED USING #10 AWG

FIELD PAOLI

Architecture
1045 Sansome St.
Suite 206
San Francisco
California, 94111
Tel. 415. 788. 6606
Fax 415. 788. 6650

SARATOGA COMMUNITY LIBRARY

SANTA CLARA COUNTY LIBRARY

13650 Saratoga Avenue
Saratoga, California 95070

O'MAHONY & MYER
ELECTRICAL and LIGHTING DESIGN
4340 REDWOOD HWY., SUITE 245
SAN RAFAEL, CALIFORNIA 94903
(415) 492-0420/FAX (415) 479-9662
www.commconsulting.com

DATE	OCTOBER 26, 2001
REVISIONS	BID SET

FLOOR PLAN - QUAD. A - POWER AND SIGNAL

SCALE	1/8" = 1'-0"
DRAWN BY	TV/OO
CHECKED BY	NT/PC
JOB NO.	200095

PHASE - 2

SHEET NO. E3.1A

All drawings and written material appearing herein constitute the original and unpublished work of the architect and the same may not be duplicated, used, or disclosed without the written consent of the architect ©Field Paoli

SARATOGA LIBRARY 200095
(USING ARIAL SPA FOR MISSING Arial-ufonotsu FONT)
FILE: P:\2000\SARATOGA_LIBRARY-200095\CAD\E_SLA-ELA.dwg,DWG 11/02/01 at 11:28

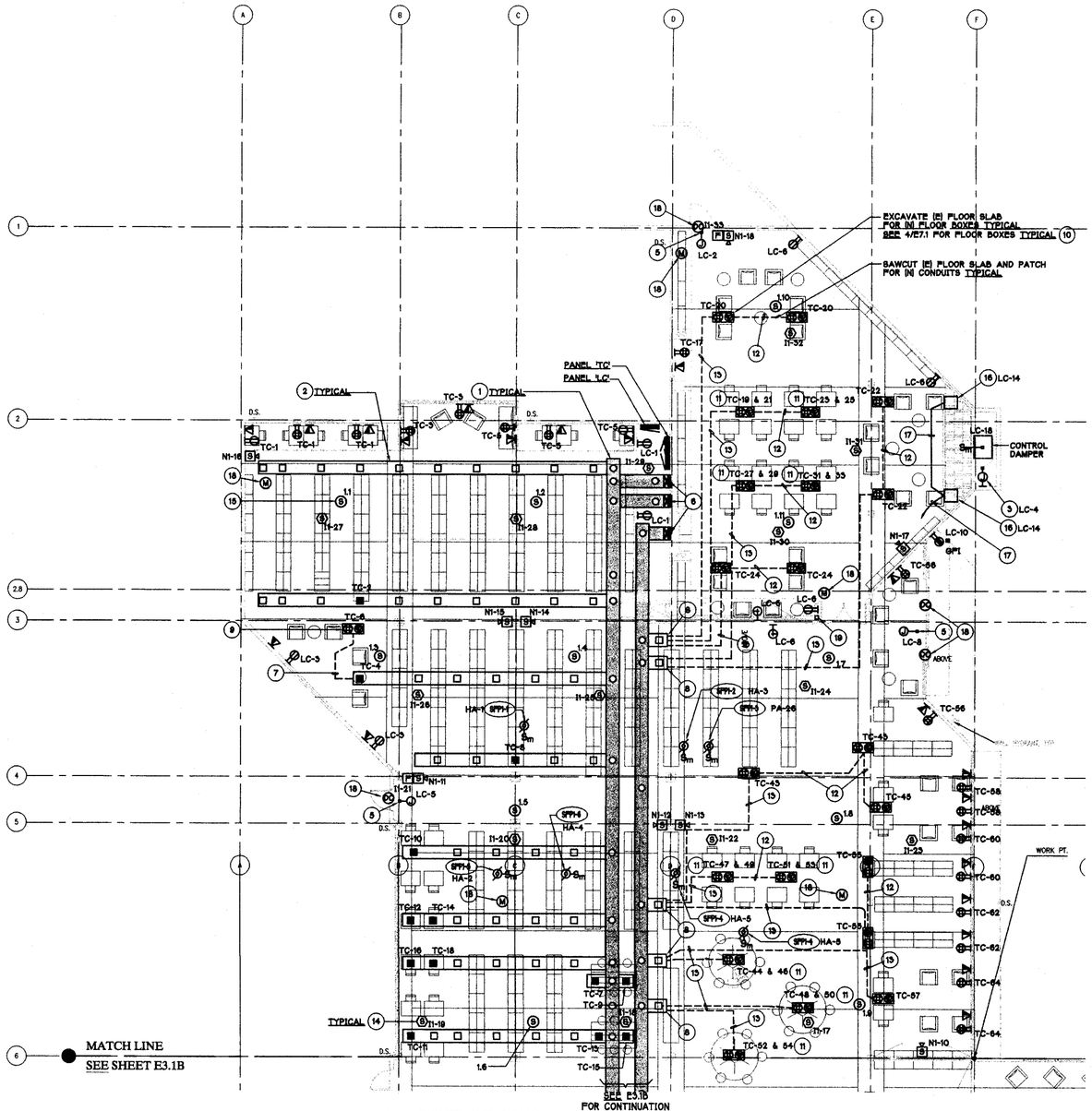

FLOOR PLAN - QUAD A - POWER AND SIGNAL
SCALE: 1/8" = 1'-0"
FILE: ... Xref\pln-10-18-01

NUMBERED SHEET NOTES

1. SEE PHASE 1 DRAWINGS FOR (3) COMPARTMENT, JUNCTION BOX HEADER.
2. SEE PHASE 1 DRAWINGS FOR (3) COMPARTMENT UNDER FLOOR DUCT. ALL ACTIVATED BOXES TO BE PROVIDED WITH TWO(2) 20 AMP DUPLEX RECEPTACLES AND TWO BLANK COVER PLATES FOR TEL/DATA COMPARTMENTS. NON-ACTIVATED BOXES TO BE PROVIDED WITH THREE BLANK COVERPLATES, HINGED COVER AND CARPET FLANGE WITH WIRE MANAGEMENT BLOCKS. OUTLETS AND ACCESSORIES TO BE PROVIDED AND INSTALLED AS PART OF THE PHASE 2 PROJECT. ALL 120VOLT WIRING TO BE PROVIDED AND INSTALLED AS PART OF THE PHASE 2 PROJECT. USE ONE COMPARTMENT ONLY FOR 120VOLT WIRING.
3. 120VOLT POWER CONNECTION TO FIRE PLACE. VERIFY LOCATION PRIOR TO ROUGH-IN.
4. NOT USED.
5. 120VOLT CIRCUIT FOR DOOR ALARM, VERIFY LOCATION PRIOR TO ROUGH-IN.
6. FLOOR DUCTS STUBBED UP 6 INCHES A.F.F. AS PART OF PHASE 1. PROVIDE AND INSTALL ALL REQUIRED RACEWAYS FROM THE STUB-UPS TO PANELBOARDS AS PART OF THE PHASE 2 PROJECT.
7. CONDUIT INSTALLED AS PART OF PHASE 1. PROVIDE AND INSTALL NEW WIRING TO OUTLET AS PART OF PHASE 2.
8. PROVIDE AND INSTALL CONDUIT AND WIRING FROM THE FLOOR DUCT TO THE FLOOR BOXES AS INDICATED. SEE PHASE 1 DRAWINGS FOR BLOCK OUTS AT FLOOR DUCT. PATCH FLOOR AT BLOCK OUTS AFTER CONDUIT INSTALLATION.
9. FLOOR BOX INSTALLED AS PART OF PHASE 1. PROVIDE AND INSTALL TWO(2) 20AMP DUPLEX RECEPTACLES, IN EACH FLOOR BOX, SEE 4/E7.1.
10. PROVIDE AND INSTALL NEW FLOOR BOXES IN EXISTING SLAB TYPICAL U.O.N.
11. CONNECT EACH 20AMP, DUPLEX OUTLET IN FLOOR BOX TO A DEDICATED CIRCUIT.
12. PROVIDE AND INSTALL THREE 3/4" CONDUITS IN FLOOR SLAB BETWEEN FLOOR BOXES AS INDICATED. ONE CONDUIT SHALL BE USED FOR 120 VOLT BRANCH CIRCUIT, AND TWO OF THE CONDUITS SHALL BE USED FOR TEL/DATA WIRING.
13. PROVIDE AND INSTALL THREE 1" CONDUITS IN FLOOR SLAB BETWEEN FLOOR BOX AND FLOOR DUCT SYSTEM AS INDICATED. TERMINATE ONE CONDUIT IN EACH OF THE THREE COMPARTMENTS IN THE FLOOR SYSTEM. ONE CONDUIT SHALL BE USED FOR 120VOLT BRANCH CIRCUIT, AND TWO OF THE CONDUITS SHALL BE USED FOR TEL/DATA WIRING.
14. FOR FIRE ALARM REQUIREMENTS, SEE 1/E5.3, SINGLE LINE DIAGRAM, FIRE ALARM.
15. PUBLIC ADDRESS SPEAKER, SEE 15/E7.2 TYPICAL.
16. MOTORIZED SHADES WITH OPERATOR, CONNECT COMPLETE PER THE MANUFACTURES REQUIREMENTS. VERIFY LOCATION OF EQUIPMENT.
17. PROVIDE AND INSTALL 6#18, IN 1/2" CONDUIT TO CONTROLLER, SEE NOTE 14 ABOVE.
18. PROVIDE AND INSTALL 1/2" CONDUIT TO SECURITY PANEL LOCATION IN ROOM 120, UP TO SIX DEVICE LOCATIONS MAY BE DAISY-CHAINED ON ONE 1/2" COUNDUIT HOMERUN.
19. SHADE CONTROLLER VERIFY LOCATION.

NOTE: SEE PHASE 1 DRAWINGS FOR ALL INSLAB WORK. ALL WIRING AND EXTENSIONS OF RACEWAYS SHALL BE CARRIED OUT AS PART OF THE PHASE 2 PROJECT.

NOTE: DEDICATED NEUTRAL REQUIRED FOR ALL RECEPTACLE BRANCH CIRCUITS. ALL RECEPTACLES CIRCUITS IN FLOOR DUCT SHALL BE WIRED USING #10 AWG

FIELD PAOLI

Architecture
1045 Sansome St.
Suite 206
San Francisco
California, 94111
Tel. 415. 788. 6606
Fax 415. 788. 6650

SARATOGA COMMUNITY LIBRARY

SANTA CLARA COUNTY LIBRARY

13650 Saratoga Avenue
Saratoga, California 95070

O'MAHONY & MYER
ELECTRICAL and LIGHTING DESIGN
4340 REDWOOD HWY., SUITE 245
SAN RAFAEL, CALIFORNIA 94903
(415) 492-0420/FAX (415) 479-9662
www.omaconsulting.com

DATE	OCTOBER 26, 2001
REVISIONS	
	BID SET

FLOOR PLAN - QUAD. A - POWER AND SIGNAL

SCALE	1/8" = 1'-0"
DRAWN BY	TV/OO
CHECKED BY	NT/PC
JOB NO.	200095

PHASE - 2

SHEET NO. E3.1A

All drawings and written material appearing herein constitute the original and unpublished work of the architect and the same may not be duplicated, used, or disclosed without the written consent of the architect. ©Field Paoli

SARATOGA_LIBRARY_200095
(USING ARIAL SHX FOR MISSING Aiharni=Ezfontdat FONT)
FILE: P:\2000\SARATOGA_LIBRARY-200095\CAD\E_314-SEA.dwg,DWG 11/02/01 at 11:26

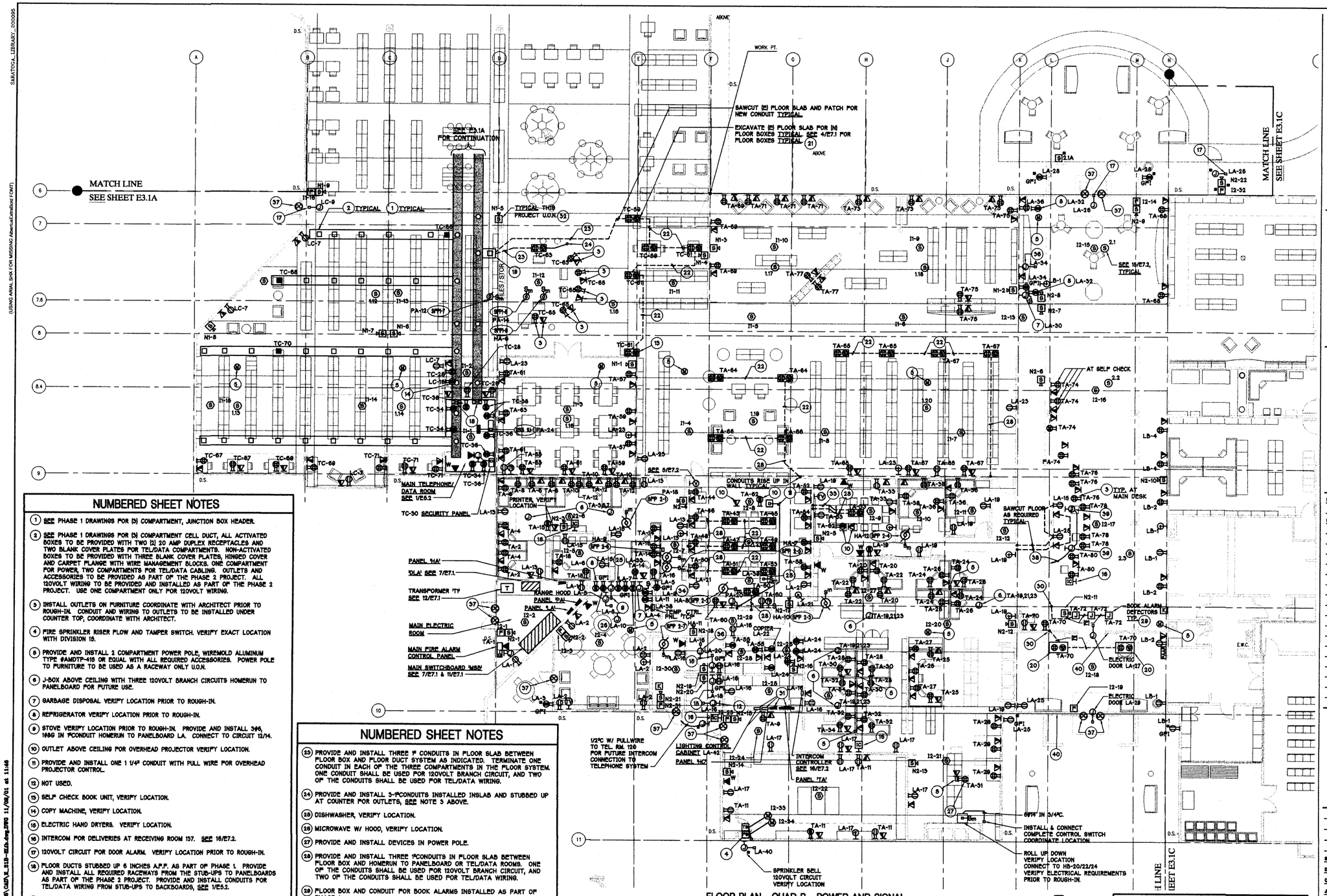

NUMBERED SHEET NOTES

1. SEE PHASE 1 DRAWINGS FOR (3) COMPARTMENT, JUNCTION BOX HEADER.
2. SEE PHASE 1 DRAWINGS FOR (3) COMPARTMENT CELL DUCT, ALL ACTIVATED BOXES TO BE PROVIDED WITH TWO (2) 20 AMP DUPLEX RECEPTACLES AND TWO BLANK COVER PLATES FOR TEL/DATA COMPARTMENTS. NON-ACTIVATED BOXES TO BE PROVIDED WITH THREE BLANK COVER PLATES, HINGED COVER AND CARPET FLANGE WITH WIRE MANAGEMENT BLOCKS. ONE COMPARTMENT FOR POWER, TWO COMPARTMENTS FOR TEL/DATA CABLING. OUTLETS AND ACCESSORIES TO BE PROVIDED AS PART OF THE PHASE 2 PROJECT. ALL 120VOLT WIRING TO BE PROVIDED AND INSTALLED AS PART OF THE PHASE 2 PROJECT. USE ONE COMPARTMENT ONLY FOR 120VOLT WIRING.
3. INSTALL OUTLETS ON FURNITURE COORDINATE WITH ARCHITECT PRIOR TO ROUGH-IN. CONDUIT AND WIRING TO OUTLETS TO BE INSTALLED UNDER COUNTER TOP, COORDINATE WITH ARCHITECT.
4. FIRE SPRINKLER RISER FLOW AND TAMPER SWITCH. VERIFY EXACT LOCATION WITH DIVISION 15.
5. PROVIDE AND INSTALL 2 COMPARTMENT POWER POLE, WIREMOLD ALUMINUM TYPE #AMDTP-415 OR EQUAL WITH ALL REQUIRED ACCESSORIES. POWER POLE TO FURNITURE TO BE USED AS A RACEWAY ONLY U.O.N.
6. J-BOX ABOVE CEILING WITH THREE 120VOLT BRANCH CIRCUITS HOMERUN TO PANELBOARD FOR FUTURE USE.
7. GARBAGE DISPOSAL VERIFY LOCATION PRIOR TO ROUGH-IN.
8. REFRIGERATOR VERIFY LOCATION PRIOR TO ROUGH-IN.
9. STOVE VERIFY LOCATION PRIOR TO ROUGH-IN. PROVIDE AND INSTALL 3#6, 1#6G IN 1"CONDUIT HOMERUN TO PANELBOARD LA. CONNECT TO CIRCUIT 12/14.
10. OUTLET ABOVE CEILING FOR OVERHEAD PROJECTOR VERIFY LOCATION.
11. PROVIDE AND INSTALL ONE 1 1/4" CONDUIT WITH PULL WIRE FOR OVERHEAD PROJECTOR CONTROL.
12. NOT USED.
13. SELF CHECK BOOK UNIT, VERIFY LOCATION.
14. COPY MACHINE, VERIFY LOCATION.
15. ELECTRIC HAND DRYERS. VERIFY LOCATION.
16. INTERCOM FOR DELIVERIES AT RECEIVING ROOM 157. SEE 16/E7.2.
17. 120VOLT CIRCUIT FOR DOOR ALARM. VERIFY LOCATION PRIOR TO ROUGH-IN.
18. FLOOR DUCTS STUBBED UP 6 INCHES A.F.F. AS PART OF PHASE 1. PROVIDE AND INSTALL ALL REQUIRED RACEWAYS FROM THE STUB-UPS TO PANELBOARDS AS PART OF THE PHASE 2 PROJECT. PROVIDE AND INSTALL CONDUITS FOR TEL/DATA WIRING FROM STUB-UPS TO BACKBOARDS, SEE 1/E5.2.
19. PROVIDE AND INSTALL CONDUIT AND WIRING FROM THE FLOOR DUCT TO THE FLOOR BOXES AS INDICATED. SEE PHASE 1 DRAWINGS FOR BLOCK OUTS AT FLOOR DUCT. PATCH FLOOR AT BLOCK OUTS AFTER CONDUIT INSTALLATION.
20. FLOOR BOX INSTALLED AS PART OF PHASE 1. PROVIDE AND INSTALL TWO (2) 20AMP DUPLEX RECEPTACLES IN EACH FLOOR BOX, SEE 4/E7.1.
21. PROVIDE AND INSTALL NEW FLOOR BOXES IN EXISTING SLAB TYPICAL U.O.N.
22. PROVIDE AND INSTALL THREE 3/4" CONDUITS IN FLOOR SLAB BETWEEN FLOOR BOXES AS INDICATED. ONE CONDUIT SHALL BE USED FOR 120 VOLT BRANCH CIRCUIT, AND TWO OF THE CONDUITS SHALL BE USED FOR TEL/DATA WIRING.

NUMBERED SHEET NOTES

23. PROVIDE AND INSTALL THREE 1" CONDUITS IN FLOOR SLAB BETWEEN FLOOR BOX AND FLOOR DUCT SYSTEM AS INDICATED. TERMINATE ONE CONDUIT IN EACH OF THE THREE COMPARTMENTS IN THE FLOOR SYSTEM. ONE CONDUIT SHALL BE USED FOR 120VOLT BRANCH CIRCUIT, AND TWO OF THE CONDUITS SHALL BE USED FOR TEL/DATA WIRING.
24. PROVIDE AND INSTALL 3-1"CONDUITS INSTALLED INSLAB AND STUBBED UP AT COUNTER FOR OUTLETS, SEE NOTE 3 ABOVE.
25. DISHWASHER, VERIFY LOCATION.
26. MICROWAVE W/ HOOD, VERIFY LOCATION.
27. PROVIDE AND INSTALL DEVICES IN POWER POLE.
28. PROVIDE AND INSTALL THREE 1"CONDUITS IN FLOOR SLAB BETWEEN FLOOR BOX AND HOMERUN TO PANELBOARD OR TEL/DATA ROOMS. ONE OF THE CONDUITS SHALL BE USED FOR 120VOLT BRANCH CIRCUIT, AND TWO OF THE CONDUITS SHALL BE USED FOR TEL/DATA WIRING.
29. FLOOR BOX AND CONDUIT FOR BOOK ALARMS INSTALLED AS PART OF PHASE 1.
30. EXTEND CONDUIT AND WIRING FROM (E) STUB UP TO NEXT OUTLET OR HOMERUN TO PANEL. EXTEND DATA & SECURITY CIRCUITS TO TEL/DATA ROOM. COORDINATE PRIOR TO ROUGH-IN.
31. COORINATE WITH DIV. 15 PIPING & DUCTS IN CEILING ABOVE. DO NOT INSTALL BELOW DIVISION 15 DUCTS AND PIPES.
32. FOR FIRE ALARM REQUIREMENTS, SEE 1/E5.3 SINGLE DLINE DIAGRAM - FIRE ALARM.
33. PROVIDE AND INSTALL 3/4" CONDUIT UP TO OVERHEAD PROJECTOR.
34. WATER COOLER.

NUMBERED SHEET NOTES

35. PROJECTION SCREEN.
36. 120VOLT CONNECTION TO ELECTRIC FOSSITS & FLUSH VALVES, VERIFY LOCATION.
37. PROVIDE AND INSTALL 1/2" CONDUIT TO SECURITY PANEL LOCATION IN ROOM 120 UP TO SIX DEVICE LOCATIONS MAY BE DAISY CHAINED ON ONE 1/2" CONDUIT HOMERUN.

NUMBERED SHEET NOTES

38. 1/2" CONDUIT TO SECURITY PANEL AREA IN ROOM 120.
39. J-BOX FOR PANIC BUTTONS, VERIFY LOCATION.
40. SEE 14/E7.1 FOR FEEDER CONDUIT AND MAIN TEL/DATA CONDUITS IN THIS AREA.

FLOOR PLAN - QUAD B - POWER AND SIGNAL (1 / E3.1B)
SCALE: 1/8" = 1'-0"
FILE: ... Xref\pln-10-18-01

NOTE: SEE PHASE 1 DRAWINGS FOR ALL INSLAB WORK. ALL WIRING AND EXTENSIONS OF RACEWAYS SHALL BE CARRIED OUT AS PART OF THE PHASE 2 PROJECT.

NOTE: DEDICATED NEUTRAL REQUIRED FOR ALL RECEPTACLE BRANCH CIRCUITS. ALL RECEPTACLES CIRCUITS IN FLOOR DUCT SHALL BE WIRED USING #10 AWG

FIELD PAOLI
Architecture
1045 Sansome St.
Suite 206
San Francisco
California, 94111
Tel. 415. 788. 6606
Fax 415. 788. 6650

SARATOGA COMMUNITY LIBRARY

SANTA CLARA COUNTY LIBRARY

13650 Saratoga Avenue
Saratoga, California 95070

O'MAHONY & MYER
ELECTRICAL and LIGHTING DESIGN
4340 REDWOOD HWY., SUITE 245
SAN RAFAEL, CALIFORNIA 94903
(415) 492-0420/FAX (415) 479-9662
www.omymconsulting.com

DATE	OCTOBER 26, 2001
REVISIONS	
	BID SET

FLOOR PLAN - QUAD. B - POWER AND SIGNAL

SCALE	1/8" = 1'-0"
DRAWN BY	TV/OOJL
CHECKED BY	NT/PC
JOB NO.	200095

PHASE - 2

SHEET NO. E3.1B

All drawings and written material appearing herein constitute the original and unpublished work of the architect and the same may not be duplicated, used, or disclosed without the written consent of the architect ©Field Paoli

SARATOGA_LIBRARY_200095
(USING ARIAL SHX FOR MISSING Albertus\arial.shx) FONT)
FILE: P:\2000\SARATOGA_LIBRARY-200095\CAD\E_E1B-QUAD.dwg,DWG 11/06/01 at 11:46

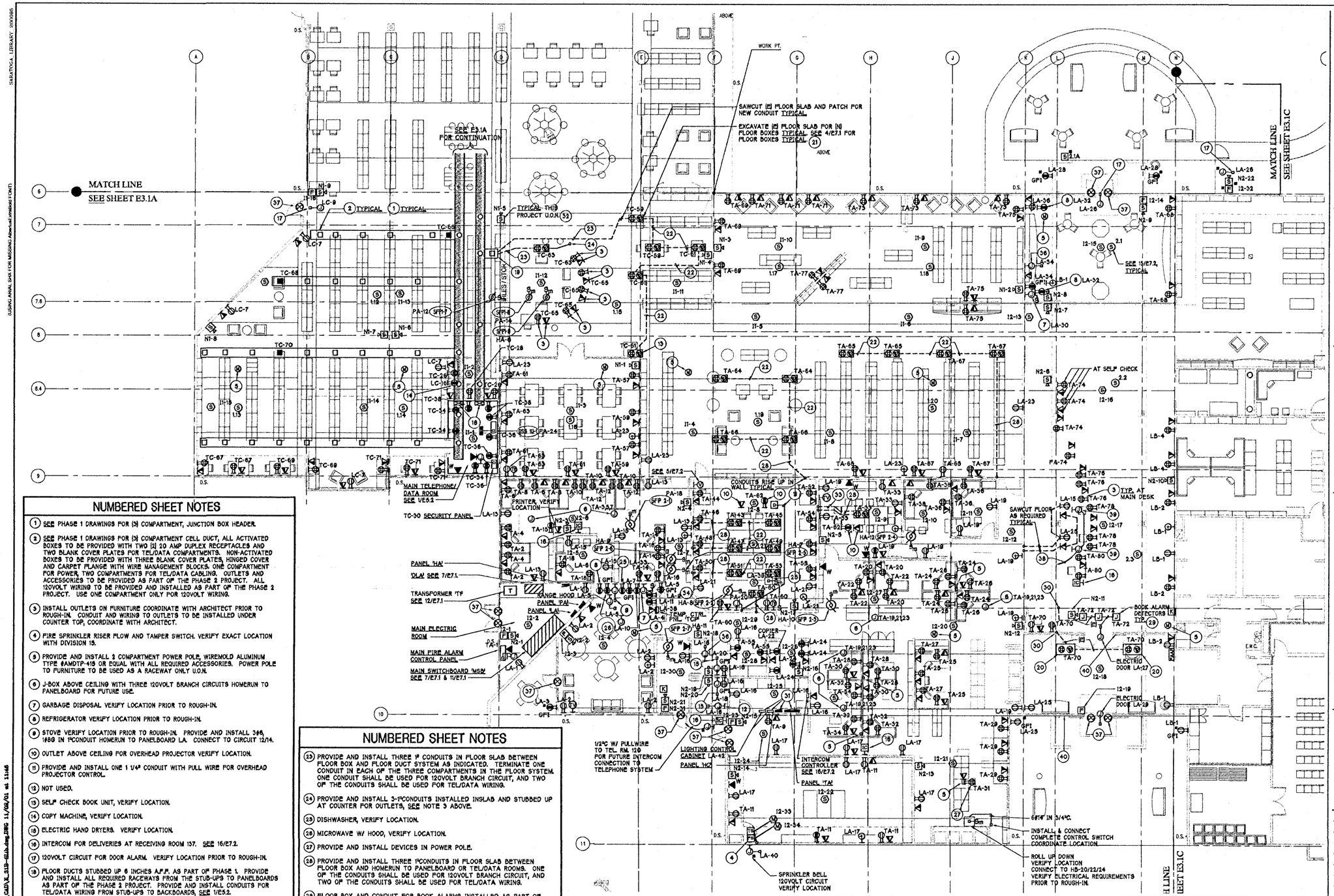

NUMBERED SHEET NOTES

1. SEE PHASE 1 DRAWINGS FOR (3) COMPARTMENT, JUNCTION BOX HEADER.
2. SEE PHASE 1 DRAWINGS FOR (3) COMPARTMENT CELL DUCT, ALL ACTIVATED BOXES TO BE PROVIDED WITH TWO (2) 20 AMP DUPLEX RECEPTACLES AND TWO BLANK COVER PLATES FOR TEL/DATA COMPARTMENTS. NON-ACTIVATED BOXES TO BE PROVIDED WITH THREE BLANK COVER PLATES, HINGED COVER AND CARPET FLANGE WITH WIRE MANAGEMENT BLOCKS. ONE COMPARTMENT FOR POWER, TWO COMPARTMENTS FOR TEL/DATA CABLING. OUTLETS AND ACCESSORIES TO BE PROVIDED AS PART OF THE PHASE 2 PROJECT. ALL 120VOLT WIRING TO BE PROVIDED AND INSTALLED AS PART OF THE PHASE 2 PROJECT. USE ONE COMPARTMENT ONLY FOR 120VOLT WIRING.
3. INSTALL OUTLETS ON FURNITURE COORDINATE WITH ARCHITECT PRIOR TO ROUGH-IN. CONDUIT AND WIRING TO OUTLETS TO BE INSTALLED UNDER COUNTER TOP, COORDINATE WITH ARCHITECT.
4. FIRE SPRINKLER RISER FLOW AND TAMPER SWITCH. VERIFY EXACT LOCATION WITH DIVISION 15.
5. PROVIDE AND INSTALL 2 COMPARTMENT POWER POLE, WIREMOLD ALUMINUM TYPE #AMDTP-419 OR EQUAL WITH ALL REQUIRED ACCESSORIES. POWER POLE TO FURNITURE TO BE USED AS A RACEWAY ONLY U.O.N.
6. J-BOX ABOVE CEILING WITH THREE 120VOLT BRANCH CIRCUITS HOMERUN TO PANELBOARD FOR FUTURE USE.
7. GARBAGE DISPOSAL VERIFY LOCATION PRIOR TO ROUGH-IN.
8. REFRIGERATOR VERIFY LOCATION PRIOR TO ROUGH-IN.
9. STOVE VERIFY LOCATION PRIOR TO ROUGH-IN. PROVIDE AND INSTALL 3#8, 1#8G IN 1"Ø CONDUIT HOMERUN TO PANELBOARD LA. CONNECT TO CIRCUIT 12/14.
10. OUTLET ABOVE CEILING FOR OVERHEAD PROJECTOR VERIFY LOCATION.
11. PROVIDE AND INSTALL ONE 1 1/4" CONDUIT WITH PULL WIRE FOR OVERHEAD PROJECTOR CONTROL.
12. NOT USED.
13. SELF CHECK BOOK UNIT, VERIFY LOCATION.
14. COPY MACHINE, VERIFY LOCATION.
15. ELECTRIC HAND DRYERS. VERIFY LOCATION.
16. INTERCOM FOR DELIVERIES AT RECEIVING ROOM 137. SEE 16/E7.2.
17. 120VOLT CIRCUIT FOR DOOR ALARM. VERIFY LOCATION PRIOR TO ROUGH-IN.
18. FLOOR DUCTS STUBBED UP 6 INCHES A.F.F. AS PART OF PHASE 1. PROVIDE AND INSTALL ALL REQUIRED RACEWAYS FROM THE STUB-UPS TO PANELBOARDS AS PART OF THE PHASE 2 PROJECT. PROVIDE AND INSTALL CONDUITS FOR TEL/DATA WIRING FROM STUB-UPS TO BACKBOARDS, SEE 1/E5.2.
19. PROVIDE AND INSTALL CONDUIT AND WIRING FROM THE FLOOR DUCT TO THE FLOOR BOXES AS INDICATED. SEE PHASE 1 DRAWINGS FOR BLOCK OUTS AT FLOOR DUCT. PATCH FLOOR AT BLOCK OUTS AFTER CONDUIT INSTALLATION.
20. FLOOR BOX INSTALLED AS PART OF PHASE 1. PROVIDE AND INSTALL TWO (2) 20AMP DUPLEX RECEPTACLES IN EACH FLOOR BOX, SEE 4/E7.1.
21. PROVIDE AND INSTALL NEW FLOOR BOXES IN EXISTING SLAB TYPICAL U.O.N.
22. PROVIDE AND INSTALL THREE 3/4" CONDUITS IN FLOOR SLAB BETWEEN FLOOR BOXES AS INDICATED. ONE CONDUIT SHALL BE USED FOR 120 VOLT BRANCH CIRCUIT, AND TWO OF THE CONDUITS SHALL BE USED FOR TEL/DATA WIRING.

NUMBERED SHEET NOTES

23. PROVIDE AND INSTALL THREE 1" CONDUITS IN FLOOR SLAB BETWEEN FLOOR BOX AND FLOOR DUCT SYSTEM AS INDICATED. TERMINATE ONE CONDUIT IN EACH OF THE THREE COMPARTMENTS IN THE FLOOR SYSTEM. ONE CONDUIT SHALL BE USED FOR 120VOLT BRANCH CIRCUIT, AND TWO OF THE CONDUITS SHALL BE USED FOR TEL/DATA WIRING.
24. PROVIDE AND INSTALL 3-1"Ø CONDUITS INSTALLED INSLAB AND STUBBED UP AT COUNTER FOR OUTLETS, SEE NOTE 3 ABOVE.
25. DISHWASHER, VERIFY LOCATION.
26. MICROWAVE W/ HOOD, VERIFY LOCATION.
27. PROVIDE AND INSTALL DEVICES IN POWER POLE.
28. PROVIDE AND INSTALL THREE 1"Ø CONDUITS IN FLOOR SLAB BETWEEN FLOOR BOX AND HOMERUN TO PANELBOARD OR TEL/DATA ROOMS. ONE OF THE CONDUITS SHALL BE USED FOR 120VOLT BRANCH CIRCUIT, AND TWO OF THE CONDUITS SHALL BE USED FOR TEL/DATA WIRING.
29. FLOOR BOX AND CONDUIT FOR BOOK ALARMS INSTALLED AS PART OF PHASE 1.
30. EXTEND CONDUIT AND WIRING FROM (E) STUB UP TO NEXT OUTLET OR HOMERUN TO PANEL. EXTEND DATA & SECURITY CIRCUITS TO TEL/DATA ROOM. COORDINATE PRIOR TO ROUGH-IN.
31. COORINATE WITH DIV. 15 PIPING & DUCTS IN CEILING ABOVE. DO NOT INSTALL BELOW DIVISION 15 DUCTS AND PIPES.
32. FOR FIRE ALARM REQUIREMENTS, SEE 1/E5.3 SINGLE LINE DIAGRAM - FIRE ALARM.
33. PROVIDE AND INSTALL 3/4" CONDUIT UP TO OVERHEAD PROJECTOR.
34. WATER COOLER.

FLOOR PLAN - QUAD B - POWER AND SIGNAL

SCALE: 1/8" = 1'-0"
FILE: ... Xref\pln-10-18-01

1 / E3.1B

NUMBERED SHEET NOTES

35. PROJECTION SCREEN.
36. 120VOLT CONNECTION TO ELECTRIC FOSSITS & FLUSH VALVES, VERIFY LOCATION.
37. PROVIDE AND INSTALL 1/2" CONDUIT TO SECURITY PANEL LOCATION IN ROOM 120 UP TO SIX DEVICE LOCATIONS MAY BE DAISY CHAINED ON ONE 1/2" CONDUIT HOMERUN.

NUMBERED SHEET NOTES

38. 1/2" CONDUIT TO SECURITY PANEL AREA IN ROOM 120.
39. J-BOX FOR PANIC BUTTONS, VERIFY LOCATION.
40. SEE 14/E7.1 FOR FEEDER CONDUIT AND MAIN TEL/DATA CONDUITS IN THIS AREA.

NOTE: SEE PHASE 1 DRAWINGS FOR ALL INSLAB WORK. ALL WIRING AND EXTENSIONS OF RACEWAYS SHALL BE CARRIED OUT AS PART OF THE PHASE 2 PROJECT.

NOTE: DEDICATED NEUTRAL REQUIRED FOR ALL RECEPTACLE BRANCH CIRCUITS. ALL RECEPTACLES CIRCUITS IN FLOOR DUCT SHALL BE WIRED USING #10 AWG

FIELD PAOLI

Architecture
1045 Sansome St.
Suite 206
San Francisco
California, 94111
Tel. 415. 788. 6606
Fax 415. 788. 6650

SARATOGA COMMUNITY LIBRARY

SANTA CLARA COUNTY LIBRARY

13650 Saratoga Avenue
Saratoga, California 95070

O'MAHONY & MYER
ELECTRICAL and LIGHTING DESIGN
4340 REDWOOD HWY. SUITE 245
SAN RAFAEL, CALIFORNIA 94903
(415) 492-0420/FAX (415) 479-9662
www.ommconsulting.com

DATE	OCTOBER 28, 2001
REVISIONS	
BID SET	

FLOOR PLAN - QUAD. B - POWER AND SIGNAL

SCALE	1/8" = 1'-0"
DRAWN BY	TV/OOJL
CHECKED BY	NT/PC
JOB NO.	200095

PHASE - 2

SHEET NO. E3.1B

All drawings and written material appearing herein constitute the original and unpublished work of the architect and the same may not be duplicated, used, or disclosed without the written consent of the architect. © Field Paoli

SARATOGA_LIBRARY_200095

(USING ARIAL SHX FOR MISSING Albertus(Linotype) FONT)

FILE: P:\200095\SARATOGA_LIBRARY-200095\CAD\E_SLD-QUA.dwg DWG 11/06/01 at 11:46

NOTE: SEE PHASE 1 DRAWINGS FOR ALL INSLAB WORK. ALL WIRING AND EXTENSIONS OF RACEWAYS SHALL BE CARRIED OUT AS PART OF THE PHASE 2 PROJECT.

NOTE: DEDICATED NEUTRAL REQUIRED FOR ALL RECEPTACLE BRANCH CIRCUITS. ALL RECEPTACLES CIRCUITS IN FLOOR DUCT SHALL BE WIRED USING #10 AWG

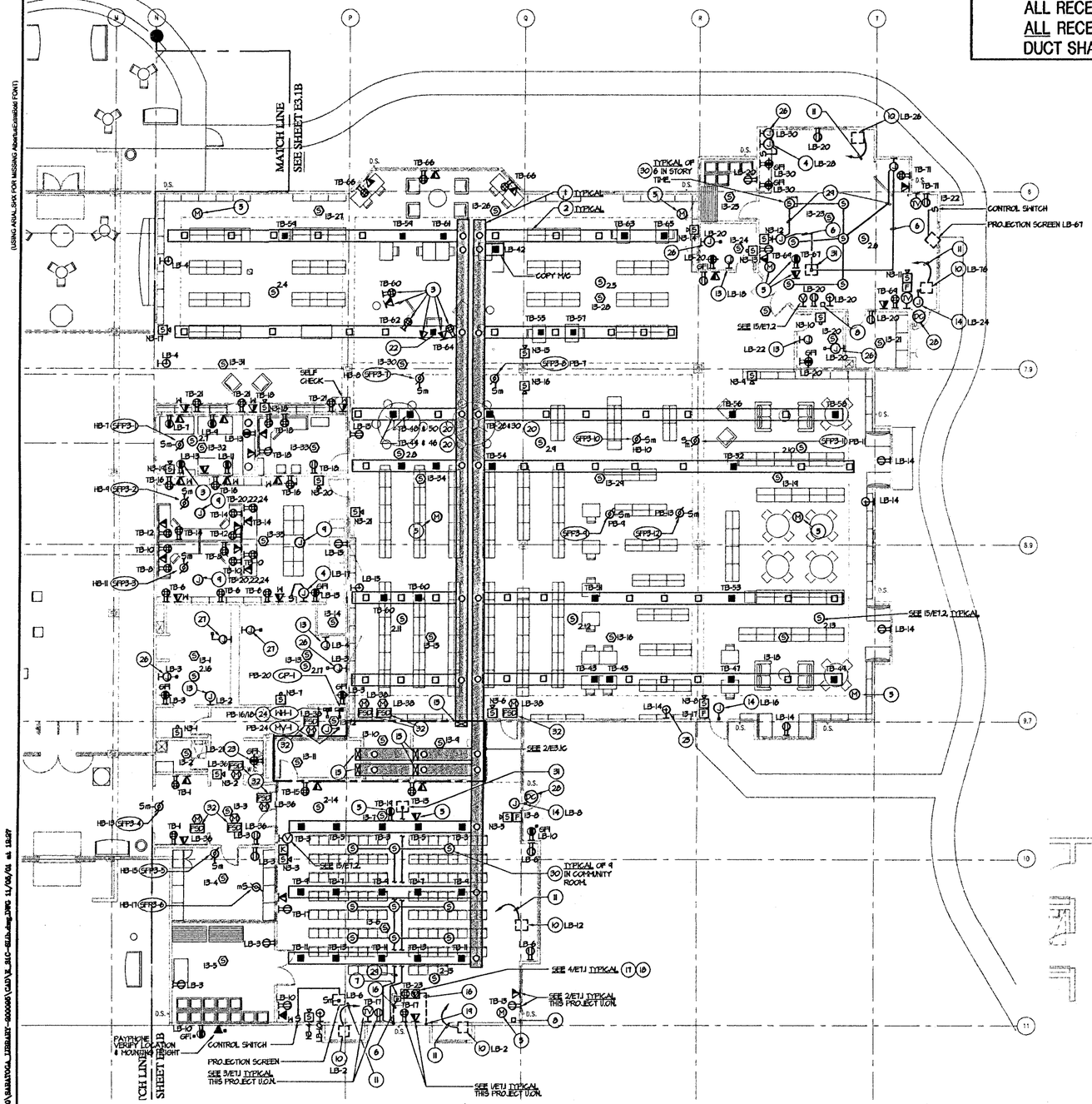

FLOOR PLAN - QUAD C - POWER AND SIGNAL
SCALE: 1/8" = 1'-0"
FILE: ... X-ref\pln-10-18-01

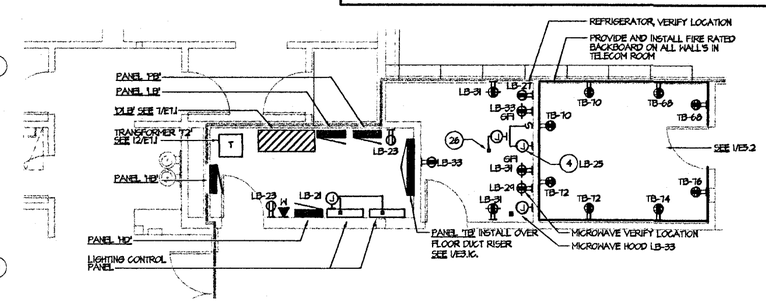

PARTIAL PLAN - ELECTRICAL
SCALE: 1/4" = 1'-0"
FILE: ... X-ref\pln-10-18-01

NUMBERED SHEET NOTES

1. SEE PHASE I DRAWINGS FOR (3) COMPARTMENT, JUNCTION BOX HEADER.
2. SEE PHASE I DRAWINGS FOR (3) COMPARTMENT CELL DUCT. ALL ACTIVATED BOXES TO BE PROVIDED WITH TWO (2) 20 AMP DUPLEX RECEPTACLES AND TWO BLANK COVER PLATES FOR TEL/DATA COMPARTMENTS. NON-ACTIVATED BOXES TO BE PROVIDED WITH THREE BLANK COVERPLATES, HINGED COVER AND CARPET FLANGE WITH WIRE MANAGEMENT BLOCKS. ONE COMPARTMENT FOR POWER, TWO COMPARTMENTS FOR TEL/DATA CABLING. OUTLETS AND ACCESSORIES TO BE PROVIDED AND INSTALLED AS PART OF THE PHASE 2 PROJECT. ALL 120 VOLTS WIRING TO BE PROVIDED AND INSTALLED AS PART OF THE PHASE 2 PROJECT. USE ONE COMPARTMENT ONLY FOR 120 VOLT WIRING.
3. LOCATE AT CHANGE MACHINE.
4. GARBAGE DISPOSAL. VERIFY LOCATION PRIOR TO ROUGH-IN.
5. INSTALL OUTLET AT CEILING ADJACENT TO OVERHEAD PROJECTOR. VERIFY LOCATION PRIOR TO ROUGH-IN.
6. (1)- 1" CONDUIT WITH PULLWIRE TO OVERHEAD PROJECTOR.
7. SEE PHASE I DRAWINGS FOR FLOOR BOX AT PODIUM.
8. SHADE CONTROLLER - VERIFY LOCATION.
9. J-BOX ABOVE CEILING WITH THREE 120 VOLT BRANCH CIRCUITS HOME RUN TO PANELBOARD FOR FUTURE USE.
10. MOTORIZED SHADES WITH OPERATOR, CONNECT COMPLETE PER MANUFACTURERS REQUIREMENTS. COORDINATE LOCATION PRIOR TO ROUGH-IN.
11. PROVIDE AND INSTALL 6#18, IN 1/2" CONDUIT TO CONTROLLER. SEE NOTE 8, ABOVE.
12. NOT USED.
13. HAND DRYERS. VERIFY LOCATION PRIOR TO ROUGH-IN.
14. 120 VOLT CONNECTION TO DOOR ALARM. VERIFY LOCATION PRIOR TO ROUGH-IN.
15. FLOOR DUCTS STUBBED UP 6 INCHES A.F.F. AS PART OF PHASE I. PROVIDE AND INSTALL ALL REQUIRED RACEWAYS FROM THE STUB-UPS TO PANEL BOARDS AS PART OF THE PHASE 2 PROJECT. PROVIDE AND INSTALL CONDUITS FOR TEL/DATA WIRING FROM STUB-UPS TO BACKBOARDS, SEE 1/E5.2.
16. CONDUIT INSTALLED AS PART OF PHASE I.
17. FLOOR BOX INSTALLED AS PART OF PHASE I. PROVIDE AND INSTALL TWO (2) 20AMP DUPLEX RECEPTACLES IN EACH FLOOR BOX SEE 4/E1.1.
18. PROVIDE AND INSTALL NEW WIRING TO OUTLET AS PART OF PHASE 2.
19. EXTEND CONDUIT AND WIRING FROM (E) STUB-UP TO NEXT OUTLET AND HOMERUN TO PANEL. EXTEND TEL/DATA CONDUITS TO TEL/DATA ROOM.
20. CONNECT EACH 20AMP DUPLEX OUTLET IN FLOOR BOX TO A DEDICATED CIRCUIT.
21. INSTALL OUTLETS ON FURNITURE COORDINATE WITH ARCHITECT PRIOR TO ROUGH-IN. CONDUIT AND WIRING TO OUTLETS TO INSTALLED UNDER COUNTER TOP, COORDINATE WITH ARCHITECT.
22. PROVIDE AND INSTALL COVER PLATE ON EACH SECTION IN FLOOR BOX SUITABLE FOR FLEXIBLE CONDUIT. PROVIDE AND INSTALL FLEXIBLE CONDUIT AND WIRING TO 120 VOLT RECEPTACLES AT DESK. PROVIDE AND INSTALL 3/4" CONDUIT FROM FLOOR BOX TO TEL/DATA OUTLETS. THE TEL/DATA CONDUIT MAY BE LOOPED BETWEEN OUTLET BOXES. COORDINATE PRIOR TO ROUGH-IN. MODIFY FLOOR BOX COVER FOR FLEXIBLE CONDUIT INSTALLATION.
23. ELECTRIC WATER COOLER. VERIFY LOCATION AND CONNECTION REQUIREMENTS PRIOR TO ROUGH-IN.
24. PROVIDE AND INSTALL 3#6, 1#10G. IN 1" CONDUIT TO ELECTRIC WATER HEATER.
25. COORDINATE CLOCK LOCATIONS TYPICAL THIS PROJECT, U.O.N.
26. 120 VOLT CONNECTION TO ELECTRIC FAUCETS, VERIFY LOCATION.
27. 120 VOLT CONNECTION TO ELECTRIC FLUSH VALVES, VERIFY LOCATION. CONNECT TO ALL PLUMBING FITTING.
28. PROVIDE AND INSTALL 1/2" CONDUIT TO SECURITY PANEL LOCATION IN ROOM 120, UP TO SIX DEVICE LOCATIONS MAY BE DAISY-CHAINED ON ONE 1/2" CONDUIT HOMERUN.
29. (1)- 1" CONDUIT WITH PULLWIRE TO SPEAKER BACK BOXES.
30. PROVIDE AND INSTALL CEILING SPEAKER BACK BOXES/CANS, ATLAS/SOUNDOLIER OR EQUAL, MODEL #E410, 6 1/2" DEEP FOR 4-INCH SPEAKER. SUBMIT TO OWNERS A/V VENDOR FOR APPROVAL PRIOR TO PURCHASE. COORDINATE LOCATIONS WITH ARCHITECT AND OWNERS A/V VENDOR.
31. OVERHEAD PROJECTOR - VERIFY LOCATION.
32. PROVIDE AND INSTALL 6#12, 1#12G IN 3/4" CONDUIT TO FSD REMOTE STATUS INDICATOR AND CONNECT COMPLETE. COORDINATE LOCATIONS WITH DIVISION 15.

FIELD PAOLI

Architecture
1045 Sansome St.
Suite 206
San Francisco
California, 94111
Tel. 415. 788. 6606
Fax 415. 788. 6650

SARATOGA COMMUNITY LIBRARY

SANTA CLARA COUNTY LIBRARY

13650 Saratoga Avenue
Saratoga, California 95070

O'MAHONY & MYER
ELECTRICAL and LIGHTING DESIGN
4340 REDWOOD HWY., SUITE 245
SAN RAFAEL, CALIFORNIA 94903
(415) 492-0650/FAX (415) 479-9602
www.ommconsulting.com

DATE	OCTOBER 28, 2001
REVISIONS	BID SET

FLOOR PLAN - QUAD. C - POWER AND SIGNAL

SCALE	1/8" = 1'-0"
DRAWN BY	TV/OO/JL
CHECKED BY	NT/PC
JOB NO.	200095

PHASE - 2

SHEET NO. E3.1C

All drawings and written material appearing herein constitute the original and unpublished work of the architect and the same may not be duplicated, used, or disclosed without the written consent of the architect ©Field Paoli

NOTE: SEE PHASE 1 DRAWINGS FOR ALL INSLAB WORK. ALL WIRING AND EXTENSIONS OF RACEWAYS SHALL BE CARRIED OUT AS PART OF THE PHASE 2 PROJECT.

NOTE: DEDICATED NEUTRAL REQUIRED FOR ALL RECEPTACLE BRANCH CIRCUITS. ALL RECEPTACLES CIRCUITS IN FLOOR DUCT SHALL BE WIRED USING #10 AWG

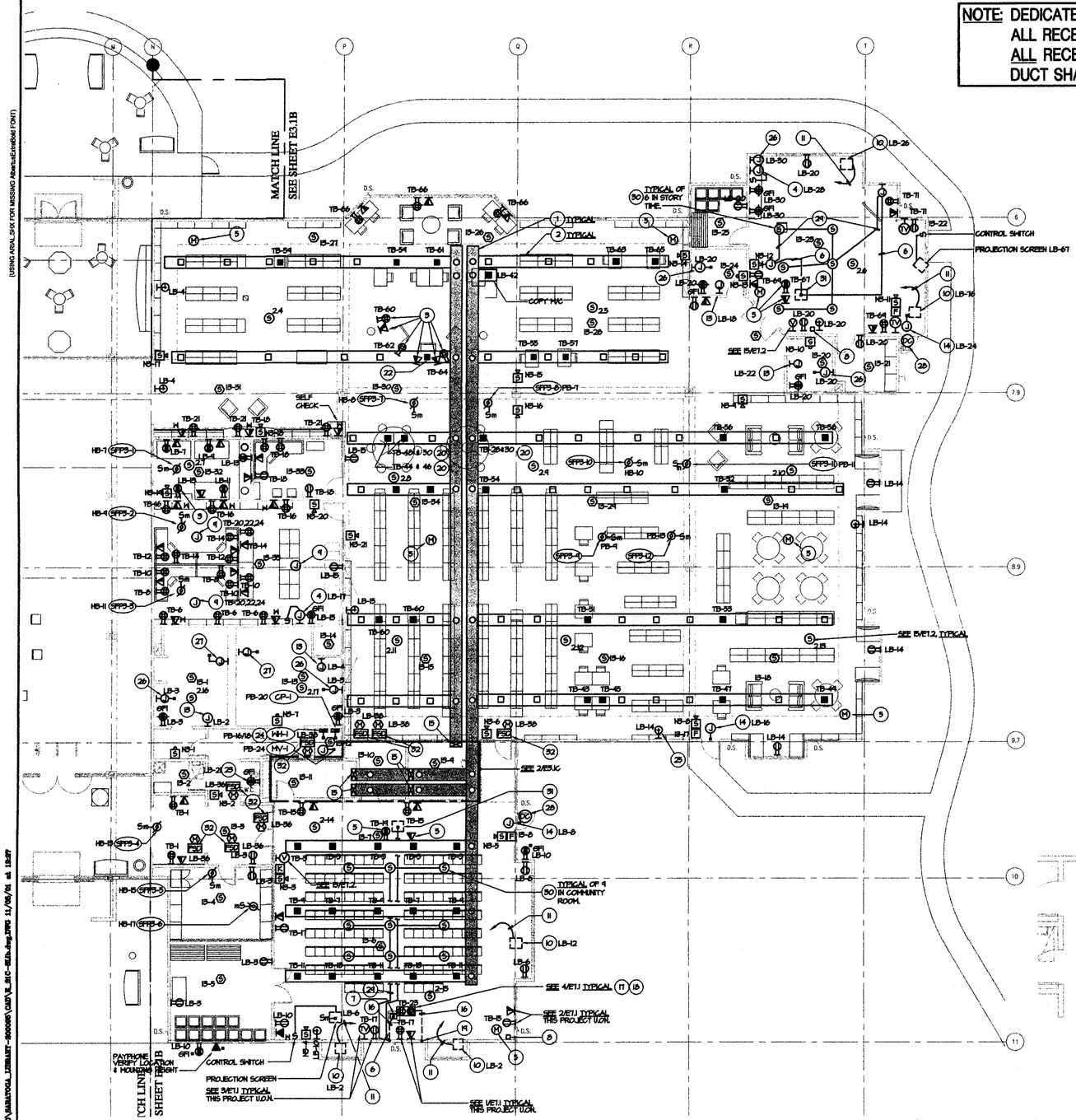

FLOOR PLAN - QUAD C - POWER AND SIGNAL
SCALE: 1/8" = 1'-0"
FILE: ... Xref\pln-10-18-01
1/E3.1C

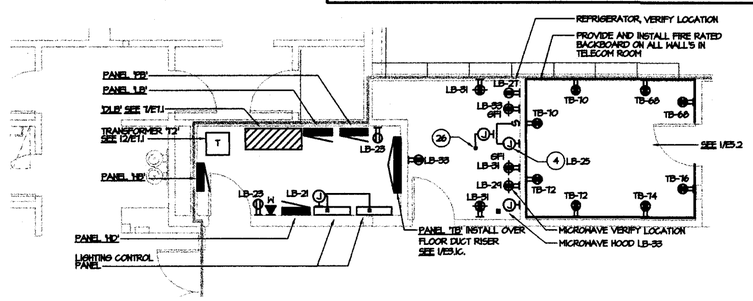

PARTIAL PLAN - ELECTRICAL
SCALE: 1/4" = 1'-0"
FILE: ... Xref\pln-10-18-01
2/E3.1C

NUMBERED SHEET NOTES

1. SEE PHASE I DRAWINGS FOR (3) COMPARTMENT, JUNCTION BOX HEADER.
2. SEE PHASE I DRAWINGS FOR (3) COMPARTMENT CELL DUCT. ALL ACTIVATED BOXES TO BE PROVIDED WITH TWO (2) 20 AMP DUPLEX RECEPTACLES AND TWO BLANK COVER PLATES FOR TEL/DATA COMPARTMENTS. NON-ACTIVATED BOXES TO BE PROVIDED WITH THREE BLANK COVERPLATES, HINGED COVER AND CARPET FLANGE WITH WIRE MANAGEMENT BLOCKS. ONE COMPARTMENT FOR POWER, TWO COMPARTMENTS FOR TEL/DATA CABLING. OUTLETS AND ACCESSORIES TO BE PROVIDED AND INSTALLED AS PART OF THE PHASE 2 PROJECT. ALL 120 VOLTS WIRING TO BE PROVIDED AND INSTALLED AS PART OF THE PHASE 2 PROJECT. USE ONE COMPARTMENT ONLY FOR 120 VOLT WIRING.
3. LOCATE AT CHANGE MACHINE.
4. GARBAGE DISPOSAL. VERIFY LOCATION PRIOR TO ROUGH-IN.
5. INSTALL OUTLET AT CEILING ADJACENT TO OVERHEAD PROJECTOR. VERIFY LOCATION PRIOR TO ROUGH-IN.
6. (1)- 1" CONDUIT WITH PULLWIRE TO OVERHEAD PROJECTOR.
7. SEE PHASE I DRAWINGS FOR FLOOR BOX AT PODIUM.
8. SHADE CONTROLLER - VERIFY LOCATION.
9. J-BOX ABOVE CEILING WITH THREE 120 VOLT BRANCH CIRCUITS HOME RUN TO PANELBOARD FOR FUTURE USE.
10. MOTORIZED SHADES WITH OPERATOR, CONNECT COMPLETE PER MANUFACTURERS REQUIREMENTS. COORDINATE LOCATION PRIOR TO ROUGH-IN.
11. PROVIDE AND INSTALL 6#18, IN 1/2" CONDUIT TO CONTROLLER. SEE NOTE 8, ABOVE.
12. NOT USED.
13. HAND DRYERS. VERIFY LOCATION PRIOR TO ROUGH-IN.
14. 120 VOLT CONNECTION TO DOOR ALARM. VERIFY LOCATION PRIOR TO ROUGH-IN.
15. FLOOR DUCTS STUBBED UP 6 INCHES A.F.F. AS PART OF PHASE I. PROVIDE AND INSTALL ALL REQUIRED RACEWAYS FROM THE STUB-UPS TO PANEL BOARDS AS PART OF THE PHASE 2 PROJECT. PROVIDE AND INSTALL CONDUITS FOR TEL/DATA WIRING FROM STUB-UPS TO BACKBOARDS, SEE 1/E3.2.
16. CONDUIT INSTALLED AS PART OF PHASE I.
17. FLOOR BOX INSTALLED AS PART OF PHASE I. PROVIDE AND INSTALL TWO (2) 20AMP DUPLEX RECEPTACLES IN EACH FLOOR BOX SEE 4/E1.1.
18. PROVIDE AND INSTALL NEW WIRING TO OUTLET AS PART OF PHASE 2.
19. EXTEND CONDUIT AND WIRING FROM (E) STUB-UP TO NEXT OUTLET AND HOMERUN TO PANEL. EXTEND TEL/DATA CONDUITS TO TEL/DATA ROOM.
20. CONNECT EACH 20AMP DUPLEX OUTLET IN FLOOR BOX TO A DEDICATED CIRCUIT.
21. INSTALL OUTLETS ON FURNITURE COORDINATE WITH ARCHITECT PRIOR TO ROUGH-IN. CONDUIT AND WIRING TO OUTLETS TO INSTALLED UNDER COUNTER TOP, COORDINATE WITH ARCHITECT.
22. PROVIDE AND INSTALL COVER PLATE ON EACH SECTION IN FLOOR BOX SUITABLE FOR FLEXIBLE CONDUIT. PROVIDE AND INSTALL FLEXIBLE CONDUIT AND WIRING TO 120 VOLT RECEPTACLES AT DESK. PROVIDE AND INSTALL 3/4" CONDUIT FROM FLOOR BOX TO TEL/DATA OUTLETS. THE TEL/DATA CONDUIT MAY BE LOOPED BETWEEN OUTLET BOXES. COORDINATE PRIOR TO ROUGH-IN. MODIFY FLOOR BOX COVER FOR FLEXIBLE CONDUIT INSTALLATION.
23. ELECTRIC WATER COOLER. VERIFY LOCATION AND CONNECTION REQUIREMENTS PRIOR TO ROUGH-IN.
24. PROVIDE AND INSTALL 3#6, 1#10G. IN 1" CONDUIT TO ELECTRIC WATER HEATER.
25. COORDINATE CLOCK LOCATIONS TYPICAL THIS PROJECT, U.O.N.
26. 120 VOLT CONNECTION TO ELECTRIC FAUCETS, VERIFY LOCATION.
27. 120 VOLT CONNECTION TO ELECTRIC FLUSH VALVES, VERIFY LOCATION. CONNECT TO ALL PLUMBING FITTING.
28. PROVIDE AND INSTALL 1/2" CONDUIT TO SECURITY PANEL LOCATION IN ROOM 120, UP TO SIX DEVICE LOCATIONS MAY BE DAISY-CHAINED ON ONE 1/2" CONDUIT HOMERUN.
29. (1)- 1" CONDUIT WITH PULLWIRE TO SPEAKER BACK BOXES.
30. PROVIDE AND INSTALL CEILING SPEAKER BACK BOXES/CANS, ATLAS/SOUNDOLIER OR EQUAL, MODEL #5410, 6 1/2" DEEP FOR 4-INCH SPEAKER. SUBMIT TO OWNERS A/V VENDOR FOR APPROVAL PRIOR TO PURCHASE. COORDINATE LOCATIONS WITH ARCHITECT AND OWNERS A/V VENDOR.
31. OVERHEAD PROJECTOR - VERIFY LOCATION.
32. PROVIDE AND INSTALL 6#12, 1#12G IN 3/4" CONDUIT TO FSD REMOTE STATUS INDICATOR AND CONNECT COMPLETE. COORDINATE LOCATIONS WITH DIVISION 15.

FIELD PAOLI

Architecture
1045 Sansome St.
Suite 206
San Francisco
California, 94111
Tel. 415. 788. 6606
Fax 415. 788. 6650

SARATOGA COMMUNITY LIBRARY

SANTA CLARA COUNTY LIBRARY

13650 Saratoga Avenue
Saratoga, California 95070

O'MAHONY & MYER
ELECTRICAL and LIGHTING DESIGN
4340 REDWOOD HWY, SUITE 245
SAN RAFAEL, CALIFORNIA 94903
(415) 492-0820/FAX (415) 479-9662
www.omaheyconsulting.com

DATE	OCTOBER 26, 2001
REVISIONS	
BID SET	

FLOOR PLAN - QUAD. C - POWER AND SIGNAL

SCALE	1/8" = 1'-0"
DRAWN BY	TV/OO/JL
CHECKED BY	NT/PC
JOB NO.	200095

PHASE - 2

SHEET NO. E3.1C

All drawings and written material appearing herein constitute the original and unpublished work of the architect and the same may not be duplicated, used, or disclosed without the written consent of the architect ©Field Paoli

SARATOGA_LIBRARY_200095
(USING ARIAL SHX FOR MISSING Albertus Extra Bold FONT)
TILE: P:\2000\SARATOGA_LIBRARY-200095\CAD\E_ELC-QUAD.DWG 11/05/01 at 12:27

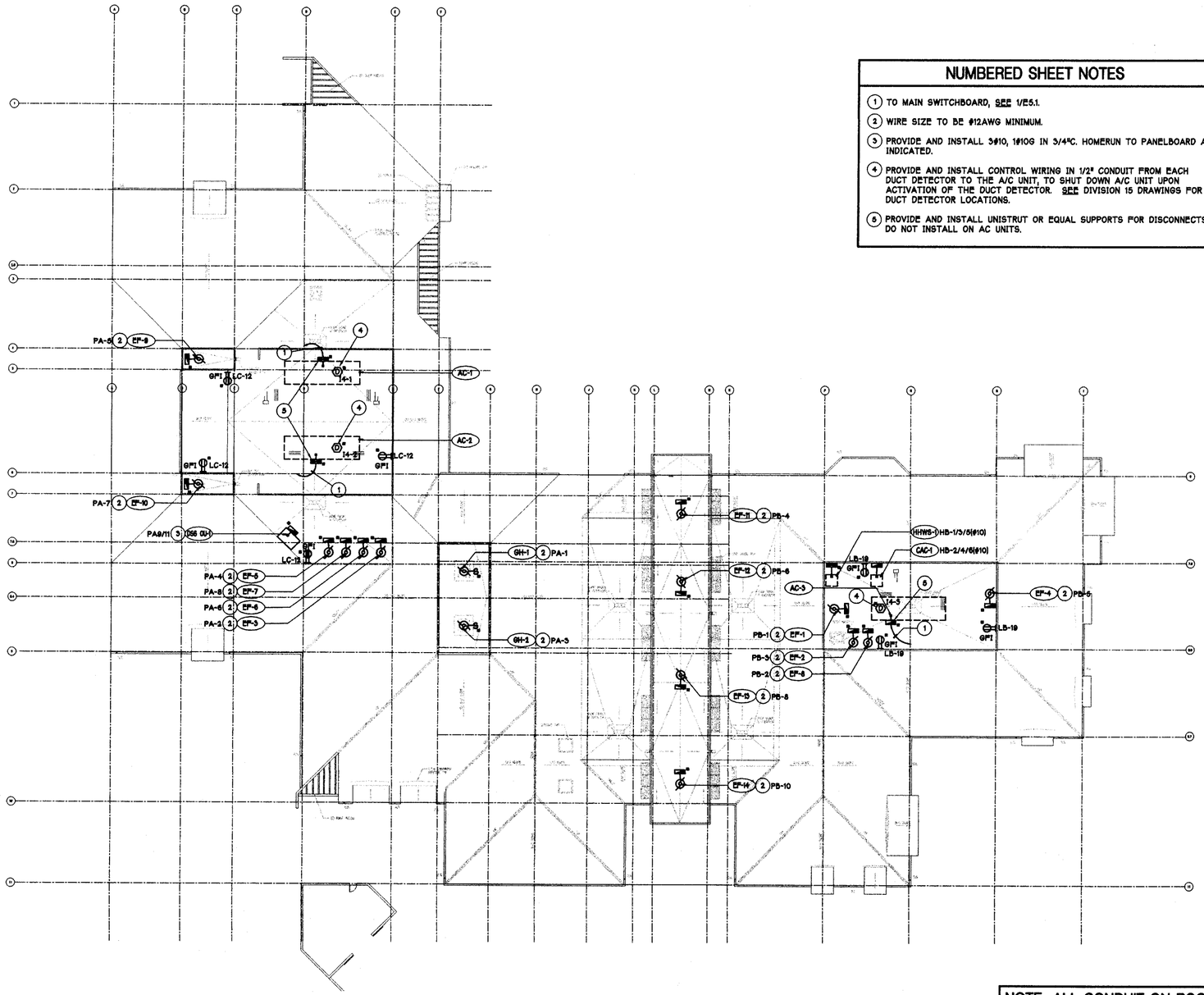

NUMBERED SHEET NOTES

1. TO MAIN SWITCHBOARD, SEE 1/E5.1.
2. WIRE SIZE TO BE #12AWG MINIMUM.
3. PROVIDE AND INSTALL 3#10, 1#10G IN 3/4"C. HOMERUN TO PANELBOARD AS INDICATED.
4. PROVIDE AND INSTALL CONTROL WIRING IN 1/2" CONDUIT FROM EACH DUCT DETECTOR TO THE A/C UNIT, TO SHUT DOWN A/C UNIT UPON ACTIVATION OF THE DUCT DETECTOR. SEE DIVISION 15 DRAWINGS FOR DUCT DETECTOR LOCATIONS.
5. PROVIDE AND INSTALL UNISTRUT OR EQUAL SUPPORTS FOR DISCONNECTS. DO NOT INSTALL ON AC UNITS.

NOTE: ALL CONDUIT ON ROOF SHALL BE RIGID GALVANIZED STEEL.

ROOF PLAN - ELECTRICAL
SCALE: 1/16" = 1'-0"
FILE: .. MECH_RF_PLAN
1 / E4.1

FIELD PAOLI

Architecture
1045 Sansome St.
Suite 206
San Francisco
California, 94111
Tel. 415. 788. 6606
Fax 415. 788. 6650

SARATOGA COMMUNITY LIBRARY

SANTA CLARA COUNTY LIBRARY

13650 Saratoga Avenue
Saratoga, California 95070

O'MAHONY & MYER
ELECTRICAL and LIGHTING DESIGN
4340 REDWOOD HWY., SUITE 245
SAN RAFAEL, CALIFORNIA 94903
(415) 492-0420/FAX (415) 479-9662
www.ommconsulting.com

DATE	OCTOBER 26, 2001
REVISIONS	BID SET

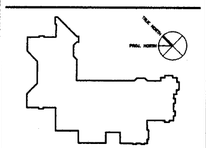

ROOF PLAN - ELECTRICAL

SCALE	1/16" = 1'-0"
DRAWN BY	TV/JL/OO
CHECKED BY	NT/PC
JOB NO.	200095

PHASE - 2

SHEET NO. **E4.1**

All drawings and written material appearing herein constitute the original and unpublished work of the architect and the same may not be duplicated, used, or disclosed without the written consent of the architect ©Field Paoli

SARATOGA_LIBRARY_200095
(USING ARIAL SHX FOR MISSING AbbrevtuExtraBold FONT)
FILE: P:\2000\SARATOGA_LIBRARY-200095\CAD\E_41-Sub.dwg DWG 11/09/01 at 10:46

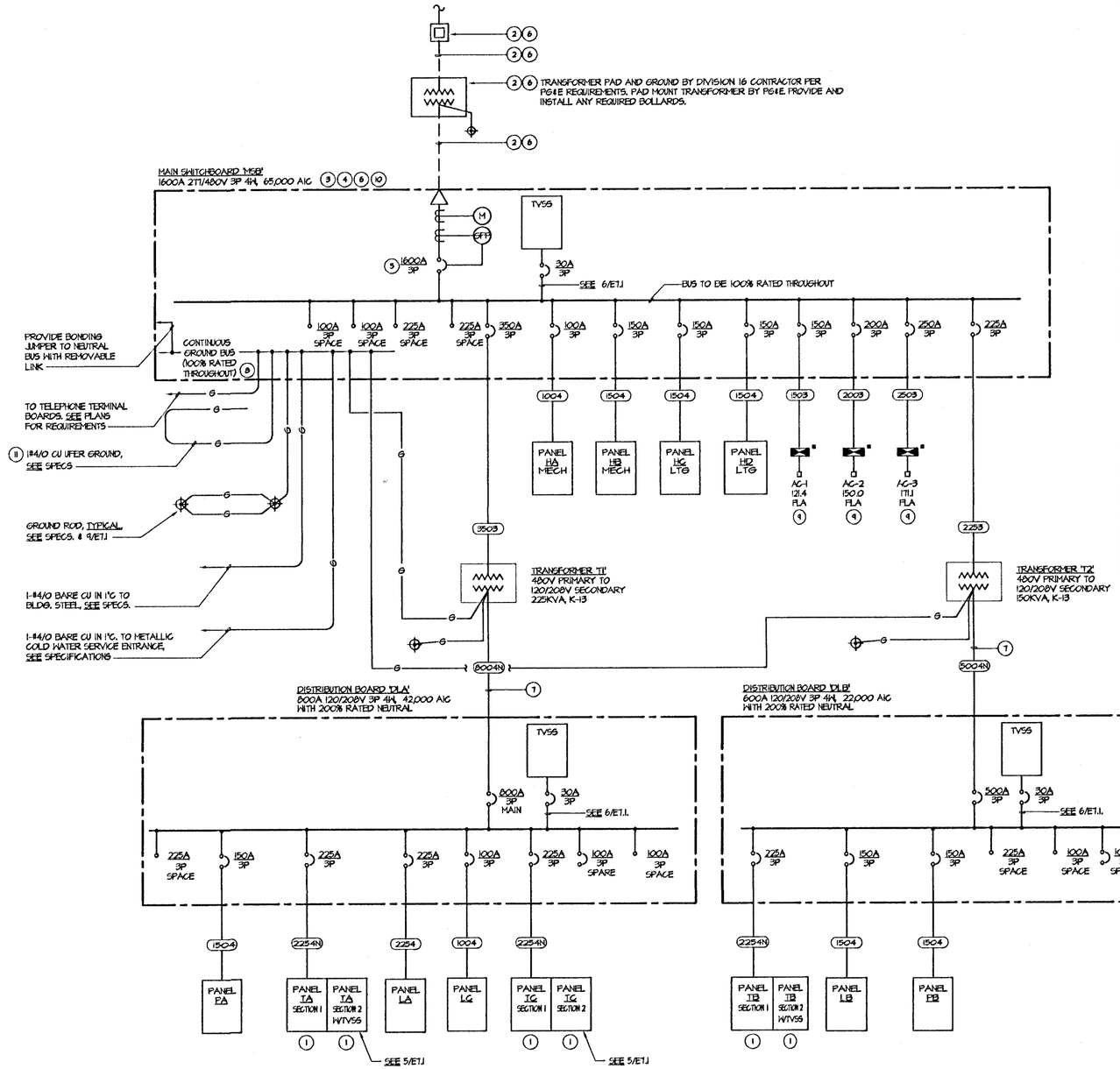

POWER SINGLE LINE DIAGRAM
SCALE: NONE
FILE:

NUMBERED SHEET NOTES

1. PROVIDE PANEL WITH 200% RATED NEUTRAL BUS AND TVSS.
2. SEE PHASE 1 DRAWINGS FOR PRIMARY AND SECONDARY UTILITY SERVICE CONDUITS & PULL BOXES.
3. THE CONTRACTOR SHALL SUBMIT THE MAIN SWITCHBOARD SHOP DRAWINGS TO PG&E FOR FINAL APPROVAL AND A/C VERIFICATION PRIOR TO RELEASE FOR MANUFACTURING. NO EXTRA CHARGES SHALL BE APPROVED FOR FAILURE TO DO SO. THE SWITCHBOARD SHALL MEET ALL REQUIREMENTS OF PG&E FOR A COMPLETE AND PERMANENT INSTALLATION.
4. THE CONTRACTOR SHALL RETAIN THE SERVICES OF AN INDEPENDENT TESTING COMPANY (E.T.I. OR EQUAL) TO PERFORM AND PREPARE FINAL ELECTRICAL SYSTEM TESTING AND REPORTS, INCLUDING GROUND FAULT, MEGGER AND COORDINATION STUDY. SET ALL ADJUSTABLE BREAKERS TRIP SETTING AND GFP PER STUDY RECOMMENDATIONS.
5. LABEL AS "MAIN BUILDING DISCONNECT"
6. UTILITY SERVICE INFORMATION HAS BEEN FORWARDED TO PG&E FOR THEIR SERVICE ENGINEERING. THE CONTRACTOR SHALL VERIFY AND COORDINATE WITH PG&E ALL REQUIREMENTS FOR PERMANENT SERVICE PRIOR TO ORDERING ANY EQUIPMENT OR BEGINNING ANY SERVICE CONSTRUCTION. NO ALLOWANCES WILL BE GIVEN FOR FAILURE TO DO SO.
7. CIRCUIT LENGTH NOT EXCEED 25 FEET.
8. IN ADDITION TO GROUNDING INDICATED, BOND ALL COLD WATER PIPING SYSTEM, GAS PIPING SYSTEMS, AND SPRINKLER PIPING SYSTEMS TO THE BUILDING GROUNDING ELECTRODE SYSTEM WITH (1) #4 CU INSTALLED IN (1) 3/4" CONDUIT. BOND WHEREVER THERE IS A BREAK IN THE CONTINUITY OF THESE SYSTEM THROUGHOUT THE PROJECT.
9. VERIFY ELECTRICAL LOAD REQUIREMENTS PRIOR TO ROUGH-IN AND PURCHASE OF CIRCUIT BREAKERS, CONDUIT AND FEEDERS.
10. SEE 11/E7.1 FOR SWITCHBOARD CONSTRUCTION AND COORDINATION WITH THE SERVICE CONDUITS INSTALLED IN PHASE 1. EXTEND THE SECONDARY SERVICE CONDUITS UP INTO THE UTILITY PULL SECTION AS REQUIRED.
11. EXTEND #4/0 UFER GROUND INSTALLED IN PHASE 1 AND CONNECT COMPLETE TO GROUND BUS.

COPPER FEEDER SCHEDULE

FEEDER NO.	CONDUIT	CONDUCTORS
1000N	(3) 3 1/2"	(3) SETS; 3#400/2#400N & 1#4/0 G
800N	(2) 5"	(2) SETS; 3#500/2#500N & 1#1/0 G
800	(2) 4"	(2) SETS; 4#500 & 1#1/0 G
800	(2) 4"	(2) SETS; 3#500 & 1#1/0 G
1000	(2) 3 1/2"	(2) SETS; 4#500 & 1#1/0 G
1000	(2) 3"	(2) SETS; 3#500 & 1#1/0 G
600N	(2) 3 1/2"	(2) SETS; 3#350/2#350N & 1#1/0G
600	(2) 3"	(2) SETS; 4#350 & 1#1 G
600	(2) 3"	(2) SETS; 3#350 & 1#1 G
500N	(2) 3"	(2) SETS; 3#250/2#250N & 1#2 G
500	(2) 3"	(2) SETS; 4#250 & 1#2 G
500	(2) 2 1/2"	(2) SETS; 3#250 & 1#2 G
450N	(2) 3"	(2) SETS; 3#250/2#250N & 1#2 G
450	(2) 2 1/2"	(2) SETS; 4#4/0 & 1#1/0 G
450	(2) 2"	(2) SETS; 3#4/0 & 1#1/0 G
400N	(1) 4"	3#500, 2#500N & 1#1/0G
400	(1) 3 1/2"	4#500, & 1#1/0G
400	(1) 3"	3#500 & 1#2 G
350N	(1) 4"	3#500, 2#500N & 1#2G
350	(1) 3 1/2"	4#500 & 1#2 G
350	(1) 3"	3#500 & 1#1/0 G
300N	(1) 3 1/2"	3#350/2#350N & 1#2 G
300	(1) 3"	4#350 & 1#2 G
300	(1) 3"	3#350 & 1#2 G
275	(1) 3"	4#300 & 1#4 G
275	(1) 2 1/2"	3#300 & 1#4 G
250N	(1) 3"	3#250, 2#250N & 1#4 G
250	(1) 2 1/2"	4#250 & 1#4 G
250	(1) 2"	3#250 & 1#4 G
225N	(1) 3"	3#4/0, 2#4/0N & 1#4 G
225	(1) 2 1/2"	4#4/0 & 1#4 G
225	(1) 2"	3#4/0 & 1#4 G
200N	(1) 2 1/2"	3#3/0/2 #3/0N & 1#4G
200	(1) 2"	4#3/0 & 1#4 G
200	(1) 2"	3#3/0 & 1#4 G
175N	(1) 2"	3#2/0, 2#2/0N & 1#6 G
175	(1) 2"	4#2/0 & 1#6 G
175	(1) 1 1/2"	3#2/0 & 1#6 G
150N	(1) 2"	3#1/0, 2#1/0N & 1#6 G
150	(1) 1 1/2"	4#1/0 & 1#6 G
150	(1) 1 1/2"	3#1/0 & 1#6 G
125N	(1) 2"	3#1, 2#1N & 1#6 G
125	(1) 1 1/2"	4#1 & 1#6 G
125	(1) 1 1/4"	3#1 & 1#6 G
100N	(1) 1 1/2"	3#2, 2#2N & 1#6 G
100	(1) 1 1/4"	4#2 & 1#6 G
100	(1) 1 1/4"	3#2 & 1#6 G
90	(1) 1 1/4"	4#2 & 1#6 G
90	(1) 1 1/4"	3#2 & 1#6 G
80	(1) 1 1/4"	4#4 & 1#6 G
80	(1) 1"	3#4 & 1#6 G
70	(1) 1 1/4"	4#4 & 1#8 G
70	(1) 1"	3#4 & 1#8 G
60	(1) 1 1/4"	4#6 & 1#10 G
60	(1) 1"	3#6 & 1#10 G
50N	(1) 1"	3#8/2#8N & 1#10 G
50	(1) 1"	4#8 & 1#10 G
50	(1) 3/4"	3#8 & 1#10 G
40N	(1) 1"	3#8/2#8N & 1#6G
40	(1) 3/4"	4#8 & 1#10 G
40	(1) 3/4"	3#8 & 1#10 G

NOTE: SEE 2/E5.2 POWER RISER DIAGRAM.

FEEDER TAG KEY:

1004N
- INDICATES DOUBLE NEUTRAL
- WIRE QUANTITY
- FEEDER AMPACITY

FIELD PAOLI

Architecture
1045 Sansome St.
Suite 206
San Francisco
California, 94111
Tel. 415. 788. 6606
Fax 415. 788. 6650

SARATOGA COMMUNITY LIBRARY

SANTA CLARA COUNTY LIBRARY

13650 Saratoga Avenue
Saratoga, California 95070

O'MAHONY & MYER
ELECTRICAL and LIGHTING DESIGN
4340 REDWOOD HWY., SUITE 245
SAN RAFAEL, CALIFORNIA 94903
(415) 492-0420/FAX (415) 479-5662
www.ommconsulting.com

DATE: OCTOBER 28, 2001

REVISIONS
BID SET

POWER SINGLE LINE DIAGRAM

SCALE: NONE
DRAWN BY: TV
CHECKED BY: NT/PC
JOB NO.: 200095

PHASE - 2

SHEET NO. E5.1

All drawings and written material appearing herein constitute the original and unpublished work of the architect and the same may not be duplicated, used, or disclosed without the written consent of the architect ©Field Paoli

NUMBERED SHEET NOTES

1. SEE FLOOR PLANS FOR LOCATION AND QUANTITY OF OUTLETS.
2. PROVIDE AND INSTALL A 3/4 INCH CONDUIT WITH PULL WIRE CONCEALED IN WALLS AND CEILINGS TO TELEPHONE ROOM. UP TO TWO OUTLETS MAY BE CONBINED IN ONE HOME RUN.
3. ALL TEL/DATA AND CABLE TV HOMERUN CONDUITS BETWEEN GRID LINES 'A' AND 'M' SHALL BE HOMERUN TO TELEPHONE ROOM 120.
4. ALL TELE/DATA AND CABLE TV HOMERUN CONDUITS BETWEEN GRID LINES 'M' AND 'Y' SHALL BE HOMERUN TO TELECOM ROOM 111.
5. TEL/DATA WIRING TO FLOOR BOXES WILL BE INSTALLED IN THE FLOOR DUCT SYSTEM.
6. PROVIDE AND INSTALL CONDUITS WITH PULL WIRE INSTALLED IN THE FLOOR SLAB AS INDICATED IN THE FLOOR PLANS. THE CONDUITS SHALL HOME RUN CONCEALED IN THE WALLS AND CEILINGS TO TELEPHONE ROOM.
7. PROVIDE AND INSTALL 4 (FOUR)-3" CONDUITS WITH PULL WIRES BETWEEN ROOMS AS INDICATED. PROVIDE AND INSTALL ALL FIRE SEALS AS REQUIRED. TWO OF THE CONDUITS SHALL BE USED FOR TEL/DATA WIRING AND TWO OF THE CONDUITS SHALL BE SPARES FOR FUTURE USE.
8. TYPICAL CABLE T.V. OUTLET THIS PROJECT U.O.N. SEE FLOOR PLANS FOR LOCATION AND QUANTITIES OF OUTLETS.
9. CONDUITS TO BE INSTALLED CONCEALED IN CEILING AND WALLS BETWEEN THE ROOMS. SUBMIT SHOP DRAWING FOR APPROVAL INDICATING ROUTING (COORDINATED WITH ALL OTHER DISCIPLINES) ON THE FLOOR PLANS PRIOR TO ROUGH IN.
10. PROVIDE AND INSTALL 1(ONE) 2" CONDUIT WITH PULL WIRE BETWEEN ROOMS AS INDICATED FOR CABLE T.V. PROVIDE AND INSTALL ALL FIRE SEALS AS REQUIRED.
11. TELEPHONE SERVICE CONDUITS, SEE PHASE I DRAWING 1-EF5-1.1
12. CABLE T.V. SERVICE CONDUITS, SEE PHASE I DRAWING 1-EF5-1.1.
13. PROVIDE AND INSTALL A 3/4 INCH CONDUIT WITH PULL WIRE CONCEALED IN WALLS AND CEILINGS TO TELEPHONE ROOM. SEPARATE HOME RUN REQUIRED FOR EACH OUTLET.
14. PROVIDE AND INSTALL A 1 INCH CONDUIT WITH PULL WIRE CONCEALED IN WALLS AND CEILINGS TO TELEPHONE ROOM.
15. PROVIDE AND INSTALL SIX (6), 1 INCH CONDUITS WITH PULL WIRE FROM EACH FLOOR DUCT STUB-UP TO BACKBOARDS. AT EACH STUB-UP PROVIDE AND INSTALL FLOOR DUCT END CAP AND GUTTER AS REQUIRED TO TERMINATE THE CONDUITS. SUBMIT DETAIL OF GUTTER ASSEMBLY AT FLOOR DUCT FOR APPROVAL PRIOR TO ROUGH IN. COORDINATE WITH OWNERS TELEPHONE/DATA CONTRACTOR FOR CONDUIT STUB DOWN LOCATIONS AT BACKBOARDS.
16. FOR CONDUIT ROUTE BETWEEN GRID LINES 'K' & 'N' AT ENTRY FOYER, SEE 13/ET.1.

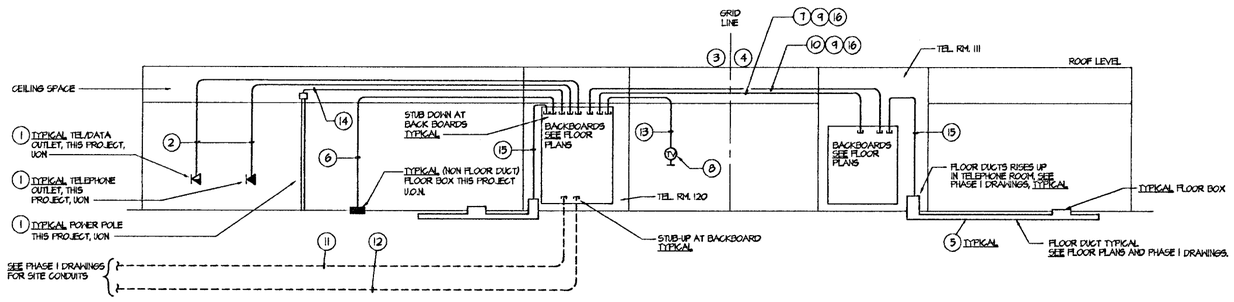

NOTE: ALL CONDUIT BENDS SHALL BE SWEEP TYPE.

TELEPHONE/DATA & CABLE TV RISER DIAGRAM
SCALE: NONE
1 / E5.2

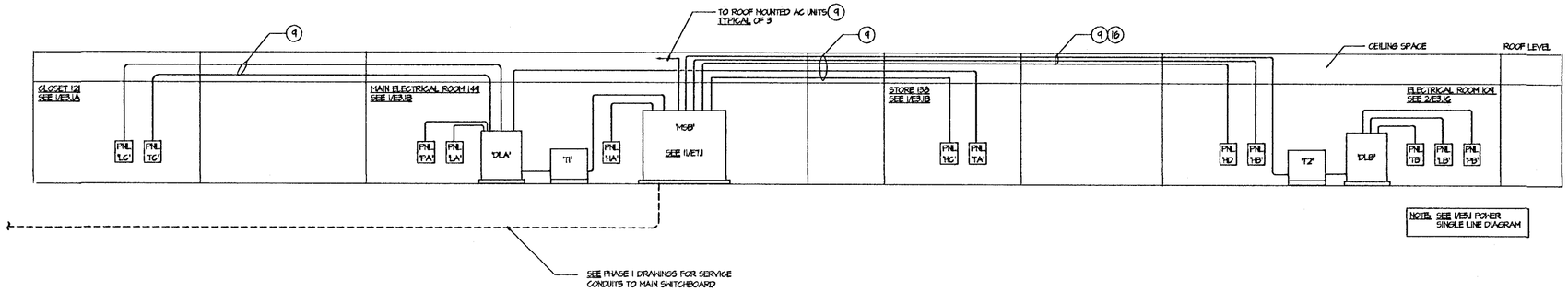

NOTE: SEE 1/E5.1 POWER SINGLE LINE DIAGRAM

POWER RISER DIAGRAM
SCALE: NONE
FILE:
2 / E5.2

FIELD PAOLI

Architecture
1045 Sansome St.
Suite 206
San Francisco
California, 94111
Tel. 415. 788. 6606
Fax 415. 788. 6650

SARATOGA COMMUNITY LIBRARY

SANTA CLARA COUNTY LIBRARY

13650 Saratoga Avenue
Saratoga, California 95070

O'MAHONY & MYER
ELECTRICAL and LIGHTING DESIGN
4340 REDWOOD HWY., SUITE 245
SAN RAFAEL, CALIFORNIA 94903
(415) 492-0420/FAX (415) 479-9662
www.ommconsulting.com

DATE	OCTOBER 28, 2001
REVISIONS	BID SET

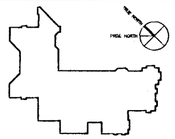

SINGLE LINE DIAGRAMS

SCALE	NONE
DRAWN BY	TV/JL
CHECKED BY	NT/PC
JOB NO.	200095

PHASE - 2

SHEET NO. **E5.2**

All drawings and written material appearing herein constitute the original and unpublished work of the architect and the same may not be duplicated, used, or disclosed without the written consent of the architect ©Field Paoli

SARATOGA_LIBRARY 200095
(USING ARIAL, SHX FOR MISSING AbertusCondBoo FONT)
FILE: P:\2000\SARATOGA_LIBRARY-200095\AVE_E2-SLD.dwg,DWG 11/16/01 at 15:38

SARATOGA LIBRARY 200095
(USING ARIAL SHX FOR MISSING AbarnuEstrdad FONT)

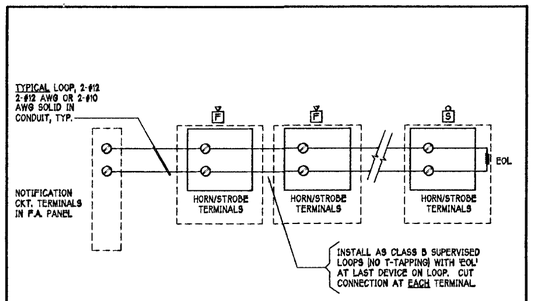

NOTIFICATION CIRCUIT WIRING

SCALE: NONE

2 E5.3

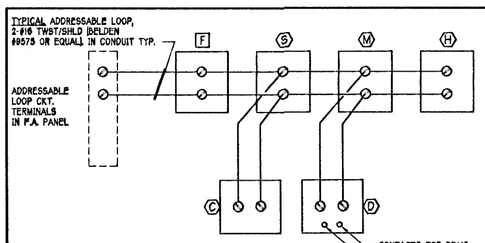

NOTES:

1. T-TAPPING ALLOWED ON ADDRESSABLE LOOPS. NO 'EOL' DEVICES REQUIRED. MAXIMUM TOTAL LENGTH OF 3,000 FEET.
2. PROPERLY TERMINATE SHIELDS AND DRAINS AS PER SYSTEM SUPPLIERS RECOMMENDED INSTRUCTIONS.

ADDRESSABLE LOOP WIRING

SCALE: NONE
FILE:

3 E5.3

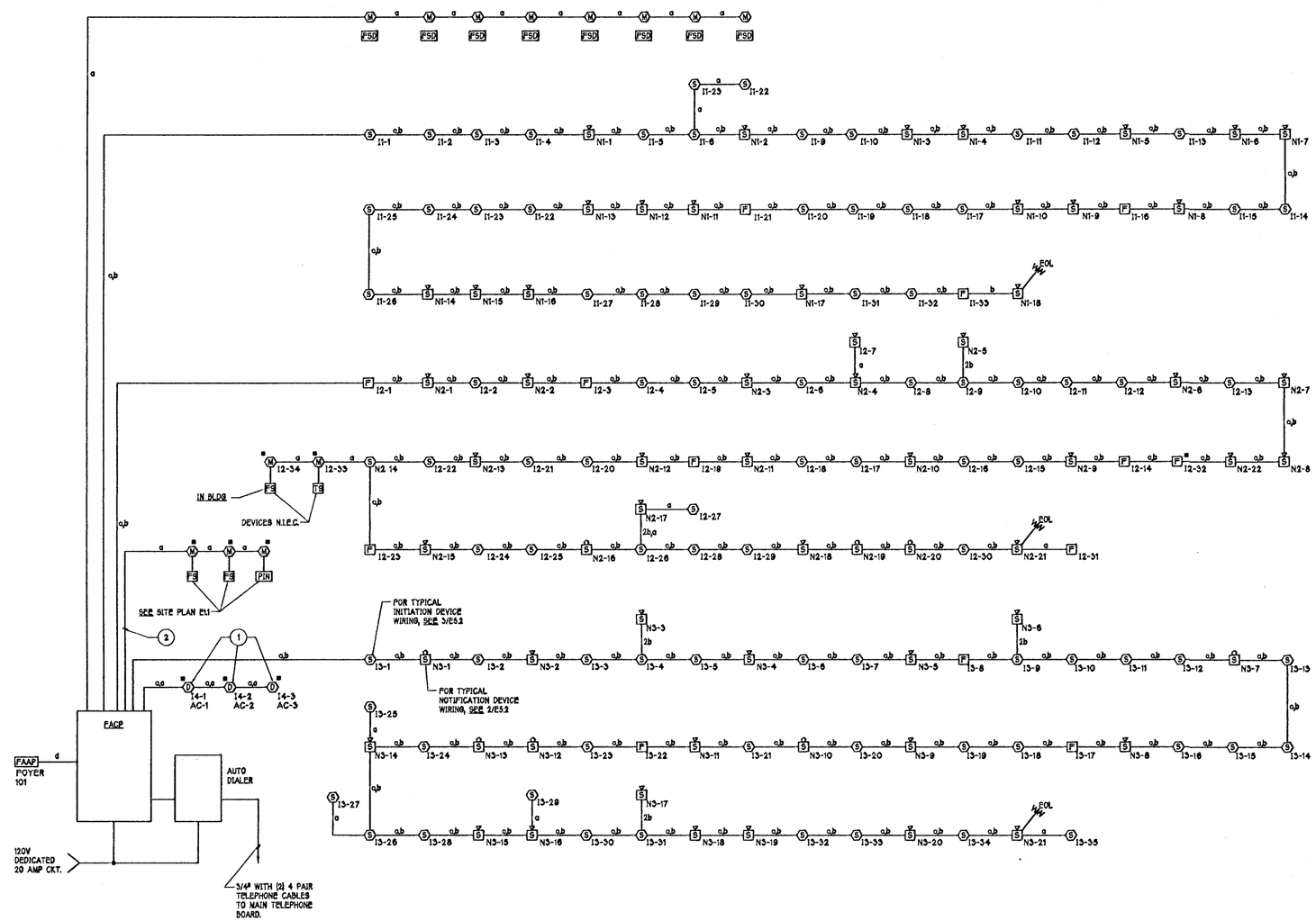

SINGLE LINE DIAGRAM - FIRE ALARM

SCALE: NONE
FILE:

1 E5.3

FIRE ALARM WIRING LEGEND

1. ALL FIRE ALARM SYSTEM SUPPLIER SUPPORT DOCUMENTATION, ENGINEERING AND COORDINATION SHALL BE INCLUDED IN THE CONTRACTORS BASE BID.
2. ALL FIRE ALARM WIRING SHALL BE IN 3/4" CONDUIT MINIMUM, U.O.N.
3. THE FIRE ALARM SYSTEM SHALL BE AN ADDRESSABLE SYSTEM WITH STYLE 4 CLASS B WIRING.

FIRE ALARM WIRING LEGEND

a	(2) #16 INITIATION CIRCUIT WIRING. TWISTED/SHIELDED
b	(2) #12 THHN NOTIFICATION CIRCUIT WIRING (OR 2#10 TO BE BASED ON CONTRACTORS VOLT DROP CALCULATIONS).
c	(2) #14 24VDC POWER
d	(2) #16 TWISTED SHIELDED ANNUNCIATOR LOOP

NUMBERED SHEET NOTES

1. PROVIDE AND INSTALL WEATHERPROOF HOUSINGS WITH THE DUCT DETECTORS. PROVIDE AND INSTALL CONTROL WIRING (5#14) IN 1/2" CONDUIT TO THE AC UNITS FOR AC UNIT SHUT DOWN UPON ACTIVATION OF THE DUCT DETECTOR. COORDINATE WITH DIVISION 15.
2. USE SITE CONDUIT INSTALLED IN PHASE 1. PROVIDE AND INSTALL ALL WIRING AND CONNECT COMPLETE. PROVIDE AND INSTALL ALL REQUIRED ADDITIONAL CONDUIT FROM STUB-UPS TO DEVICES AND FIRE ALARM PANEL.

NOTES:

SUBMIT FIRE ALARM SHOP DRAWINGS TO FIRE DEPARTMENT FOR APPROVAL. FINAL FIRE ALARM SYSTEM DESIGN AND INSTALLMENT TO INCLUDE NUMBER AND LOCATION OF FIRE ALARM DEVICES SHALL BE SUBJECT TO FIRE DISTRICT SHOP DRAWING APPROVAL AND FINAL FIELD INSPECTION.

FIELD PAOLI

Architecture
1045 Sansome St.
Suite 206
San Francisco
California, 94111
Tel. 415. 788. 6606
Fax 415. 788. 6650

SARATOGA COMMUNITY LIBRARY

SANTA CLARA COUNTY LIBRARY

13650 Saratoga Avenue
Saratoga, California 95070

O'MAHONY & MYER
ELECTRICAL and LIGHTING DESIGN
4340 REDWOOD HWY., SUITE 245
SAN RAFAEL, CALIFORNIA 94903
(415) 492-0420/FAX (415) 479-9662
www.ommonsulting.com

DATE: OCTOBER 26, 2001

REVISIONS
BID SET

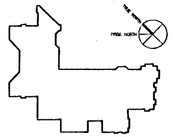

SINGLE LINE DIAGRAMS FIRE ALARM

SCALE	NONE
DRAWN BY	TV/JL
CHECKED BY	NT/PC
JOB NO.	200095

PHASE - 2

SHEET NO. **E5.3**

All drawings and written material appearing herein constitute the original and unpublished work of the architect and the same may not be duplicated, used, or disclosed without the written consent of the architect. © Field Paoli

FILE: P:\2000\SARATOGA_LIBRARY-200095\CAD\E_53-SLDiagDWG 10/26/01 at 08:01

SARATOGA LIBRARY 200095

(USING ARIAL.SHX FOR MISSING AlbertusExtraBold FONT)

PANEL LC

VOLTS: 120 / 208 V
PHASE: 3
WIRE: 4 W
BUSSING: 100A
POLES: 36P

-ALL BREAKERS TO BE SWITCH RATED.

MAIN BRKR: MLO
FEEDER: SEE SCHEDULE
CONDUIT: SEE SCHEDULE
MOUNTED: SURFACE
AIC RATING: 10,000

LOAD DESCRIPTION	TYPE	A	B	C	BRKR.	CKT.	CKT.	BRKR.	A	B	C	TYPE	LOAD DESCRIPTION
ELECTRICAL CLOSET RECP.	R	0.36			20/1	1	2	20/1	0.20			M	READING ROOM DOOR ALARM
ADULT COLLECTIONS RECP.	R		0.36		20/1	3	4	20/1		0.20		M	FIRE PLACE
DOOR ALARM ADULT	M			0.20	20/1	5	6	20/1			0.54	R	READING ROOM DOOR ALARM
ADULT COLLECTIONS RECP.	R	0.90			20/1	7	8	20/1	0.20			M	DOOR ALARM ADULT
ADULT COLLECTIONS DOOR ALARM	M		0.20		20/1	9	10	20/1		0.18		R	EXTERIOR RECP.
SPARE					20/1	11	12	20/1			0.72	R	ROOF RECP.
SPARE					20/1	13	14	20/1	0.25			M	SHADES
SPARE					20/1	15	16	20/1		1.80		R	COPY M/C
SPARE					20/1	17	18	20/1			0.50	M	CONTROL DAMPER
SPARE					20/1	19	20	20/1					SPARE
SPARE					20/3	21	22	20/1					SPARE
SPARE					20/1	23	24	20/1					SPARE
SPACE					20/1	25	26	20/1					SPARE
SPACE					20/1	27	28	20/1					SPARE
SPACE					20/1	29	30	20/1					SPARE
SPACE					20/1	31	32	20/1					SPARE
SPACE					20/1	33	34	20/1					SPARE
SPACE					20/1	35	36	20/1					SPARE
SPACE					20/1	37	38	20/1					SPACE
SPACE					20/1	39	40	20/1					SPACE
SPACE					20/1	41	42	20/1					SPACE
		1.26	0.56	0.20					0.65	2.18	1.76		

DEMAND LOAD SUMMARY	CONN. KVA	DEMAND FACTOR	DEMAND KVA
TYPE "M": NON-CONTINUOUS / MISC. LOADS	1.75	100%	1.75
TYPE "L": LIGHTING / CONTINUOUS LOADS	0.00	125%	0.00
TYPE "R": RECEPTACLES (FIRST 10KVA)	4.86	100%	4.86
TYPE "R": RECEPTACLES (OVER 10KVA)	0.00	50%	0.00
TYPE "H": HVAC / MECHANICAL LOADS	0.00	100%	0.00
TOTALS:	6.61		6.61

PHASE A: 1.91 KVA
PHASE B: 2.74 KVA
PHASE C: 1.96 KVA

22.83 MAX AMPS / PHASE

PANEL HD

VOLTS: 277 / 480 V
PHASE: 3
WIRE: 4 W
BUSSING: 225A
POLES: 36P

MAIN BRKR: MLO
FEEDER: SEE SCHEDULE
CONDUIT: SEE SCHEDULE
MOUNTED: SURFACE
AIC RATING: 22,000

LOAD DESCRIPTION	TYPE	A	B	C	BRKR.	CKT.	CKT.	BRKR.	A	B	C	TYPE	LOAD DESCRIPTION
LTG – 107 (QUAD C)	L	2.90			20/1	1	2	20/1					SPARE
LTG – 102-111 (QUAD C)	L		3.00		20/1	3	4	20/1		2.95			MAIN HALL 112
LTG – 114, 125, 126 (QUAD C)	L			2.28	20/1	5	6	20/1			3.39	L	LTG – 101, 112, 113 (QUAD B)
EXT. EM LIGHTS	L	1.50			20/1	7	8	20/1				L	
EXT. EM LIGHTS	L		1.50		20/1	9	10	20/1		2.39		L	LTG – 101, 112, 113 (QUAD B)
EXT. LIGHTING	L			1.50	20/1	11	12	20/1					SPARE
EXT. LIGHTING	L	1.50			20/1	13	14	20/1	3.24			L	LTG – 124 (QUAD C)
EXT. LIGHTING	L		0.13		20/1	15	16	20/1		2.70		L	LTG – 124 (QUAD C)
SPARE					20/1	17	18	20/1			2.62	L	LTG – 124 (QUAD C)
SPARE					20/1	19	20	20/1	3.06			L	LTG – 124 (QUAD C)
SPARE					20/1	21	22	20/1		3.09		L	LTG – 124 (QUAD C)
SPARE					20/1	23	24	20/1			1.45	L	LTG – 127-131 (QUAD C)
SPACE						25	26	20/1					SPARE
SPACE						27	28	20/1					SPARE
SPACE						29	30	20/1					SPARE
SPACE						31	32	20/1					SPARE
SPACE						33	34	20/1					SPARE
SPACE						35	36	20/1					SPARE
SPACE						37	38						SPACE
SPACE						39	40						SPACE
SPACE						41	42						SPACE
		5.90	4.63	3.78					6.30	11.13	7.46		

DEMAND LOAD SUMMARY	CONN. KVA	DEMAND FACTOR	DEMAND KVA
TYPE "M": NON-CONTINUOUS / MISC. LOADS	0.00	100%	0.00
TYPE "L": LIGHTING / CONTINUOUS LOADS	36.25	125%	45.31
TYPE "R": RECEPTACLES (FIRST 10KVA)	0.00	100%	0.00
TYPE "R": RECEPTACLES (OVER 10KVA)	0.00	50%	0.00
TYPE "H": HVAC / MECHANICAL LOADS	0.00	100%	0.00
TOTALS:	36.25		45.31

PHASE A: 12.20 KVA
PHASE B: 15.76 KVA
PHASE C: 11.24 KVA

56.90 MAX AMPS / PHASE

PANEL HA

VOLTS: 277 / 480 V
PHASE: 3
WIRE: 4 W
BUSSING: 100A
POLES: 36P

MAIN BRKR: MLO
FEEDER: SEE SCHEDULE
CONDUIT: SEE SCHEDULE
MOUNTED: SURFACE
AIC RATING: 65,000

LOAD DESCRIPTION	TYPE	A	B	C	BRKR.	CKT.	CKT.	BRKR.	A	B	C	TYPE	LOAD DESCRIPTION
SFP 1-1 (0.75 HP)	H	1.50			20/1	1	2	20/1	1.80			H	SFP 1-5 (1 HP)
SFP 1-2 (1 HP)	H		1.80		20/1	3	4	20/1		1.80		H	SFP 1-6 (1 HP)
SFP 1-4 (0.75 HP)	H			1.50	20/1	5	6	20/1			1.50	H	SFP 1-9 (0.75 HP)
SFP 2-5 (1 HP)	H	1.80			20/1	7	8	20/1	1.50			H	SFP 2-2 (0.75 HP)
SFP 2-6 (1 HP)	H		1.80		20/1	9	10	20/1		1.50		H	SFP 2-3 (0.75 HP)
SFP 2-7 (0.75 HP)	H			1.80	20/1	11	12	20/1			1.50	H	SFP 2-4 (0.75 HP)
SPARE					20/1	13	14	20/1					SPARE
SPARE					20/1	15	16	20/1					SPARE
SPARE					20/1	17	18	20/1					SPARE
SPARE					20/1	19	20	20/1					SPARE
SPARE					20/3	21	22	20/1					SPARE
SPARE					20/1	23	24	20/1					SPARE
SPARE					20/1	25	26	20/1					SPARE
SPARE					20/1	27	28	20/1					SPARE
SPARE					20/1	29	30	20/1					SPARE
SPACE					20/1	31	32	20/1					SPACE
SPACE					20/1	33	34	20/1					SPACE
SPACE					20/1	35	36	20/1					SPACE
SPACE					20/1	37	38	20/1					SPACE
SPACE					20/1	39	40	20/1					SPACE
SPACE					20/1	41	42	20/1					SPACE
		3.30	3.60	3.30					3.30	3.30	3.00		

DEMAND LOAD SUMMARY	CONN. KVA	DEMAND FACTOR	DEMAND KVA
TYPE "M": NON-CONTINUOUS / MISC. LOADS	0.00	100%	0.00
TYPE "L": LIGHTING / CONTINUOUS LOADS	0.00	125%	0.00
TYPE "R": RECEPTACLES (FIRST 10KVA)	0.00	100%	0.00
TYPE "R": RECEPTACLES (OVER 10KVA)	0.00	50%	0.00
TYPE "H": HVAC / MECHANICAL LOADS	19.80	100%	19.80
TOTALS:	19.80		19.80

PHASE A: 6.60 KVA
PHASE B: 6.90 KVA
PHASE C: 6.30 KVA

24.91 MAX AMPS / PHASE

PANEL LA

VOLTS: 120 / 208 V
PHASE: 3
WIRE: 4 W
BUSSING: 225A
POLES: 36P

-ALL BREAKERS TO BE SWITCH RATED
-* LOCK-ON DEVICE

MAIN BRKR: MLO
FEEDER: SEE SCHEDULE
CONDUIT: SEE SCHEDULE
MOUNTED: SURFACE
AIC RATING: 42,000

LOAD DESCRIPTION	TYPE	A	B	C	BRKR.	CKT.	CKT.	BRKR.	A	B	C	TYPE	LOAD DESCRIPTION
ELECTRICAL ROOM RECP.	R	0.36			20/1	1	2	20/1	0.90			R	STAFF LOUNGE RECP.
EXTERIOR RECP.	R		0.18		20/1	3	4	20/1		1.00		R	GARBAGE DISPOSAL
STAFF LOUNGE RECP.	R			0.36	20/1	5	6	20/1			1.20	R	REFRIGERATOR
STAFF LOUNGE RECP.	R	0.18			20/1	7	8	20/1					SPARE
STAFF LOUNGE VENDING	R		1.50		20/1	9	10	20/1		1.80		R	MICROWAVE
STAFF LOUNGE VENDING	R			1.50	20/1	11	12	50/2			4.80	M	RANGE
ADULT STAFF WORK RM. RECP.	R	0.90			20/1	13	14		4.80			M	RANGE
ADULT STAFF WORK RM. &148 RECP.	R		0.54		20/1	15	16	20/1		1.08		R	GENERAL RECP.
RECEIVING & SORTING RECP.	R			1.08	20/1	17	18	20/1			1.80	M	HAND DRYER
OFFICE 134, 135 & CONF 136	R	1.08			20/1	19	20	20/1	1.80			M	HAND DRYER
TRAINING ROOM RECP.	R		0.36		20/3	21	22	20/1		1.80		R	COPIER
GROUP STUDY, MEDIA RECP.	R			0.54	20/1	23	24	20/1			0.54	R	STAFF COPY ROOM
MAIN HALL & EXTERIOR RECP.	R	0.72			20/1	25	26	20/1	0.40			M	DOOR ALARMS
ELECTRIC DOOR	M		0.75		20/1	27	28	20/1		0.36		R	EXTERIOR RECP.
ELECTRIC DOOR	M			0.75	20/1	29	30	20/1			1.00	M	DISPOSAL FRIENDS LOUNGE
IRR CONTROLLER	M	0.25			20/1	31	32	20/1	1.20			M	REFRIGERATOR FRIENDS LOUNGE
DISHWASHER	R		1.60		20/1	33	34	20/1		0.18		R	FRIENDS LOUNGE RECP.
SPARE					20/1	35	36	20/1			0.36	R	FRIENDS LOUNGE RECP.
SPARE					20/1	37	38	20/1	0.50			M	TCP PANEL
PROJECTION SCREEN	M		0.25		20/1	39	40	20/1		0.25		M	SPRINKLER BELL *
EXT. PAY PHONE	M			0.10	20/1	41	42	20/1			0.25	L	LIGHTING CONTROLS
		3.49	5.38	4.33					9.60	6.47	9.95		

DEMAND LOAD SUMMARY	CONN. KVA	DEMAND FACTOR	DEMAND KVA
TYPE "M": NON-CONTINUOUS / MISC. LOADS	18.65	100%	18.65
TYPE "L": LIGHTING / CONTINUOUS LOADS	0.25	125%	0.31
TYPE "R": RECEPTACLES (FIRST 10KVA)	10.00	100%	10.00
TYPE "R": RECEPTACLES (OVER 10KVA)	10.32	50%	5.16
TYPE "H": HVAC / MECHANICAL LOADS	0.00	100%	0.00
TOTALS:	39.22		34.12

PHASE A: 13.09 KVA
PHASE B: 11.85 KVA
PHASE C: 14.28 KVA

119.00 MAX AMPS / PHASE

PANEL HB

VOLTS: 277 / 480 V
PHASE: 3
WIRE: 4 W
BUSSING: 225A
POLES: 42P

MAIN BRKR: MLO
FEEDER: SEE SCHEDULE
CONDUIT: SEE SCHEDULE
MOUNTED: SURFACE
AIC RATING: 22,000

LOAD DESCRIPTION	TYPE	A	B	C	BRKR.	CKT.	CKT.	BRKR.	A	B	C	TYPE	LOAD DESCRIPTION
HHWS-1 (16 FCA)	H	4.43				1	2		2.66			H	COMPRESSOR (2) 3HP
HHWS-1 (16 FCA)	H		4.43		25/3	3	4	20/3		2.66		H	COMPRESSOR (2) 3HP
HHWS-1 (16 FCA)	H			4.43		5	6				2.66	H	COMPRESSOR (2) 3HP
SFP 3-1 (0.75 HP)	H	1.50			20/1	7	8	20/1	1.50			H	SFP 3-7 (0.75HP)
SFP 3-2 (0.75 HP)	H		1.50		20/1	9	10	20/1		1.50		H	SFP 3-10 (0.75HP)
SFP 3-3 (0.75 HP)	H			1.50	20/1	11	12	20/1					SPARE
SFP 3-4 (1 HP)	H	1.80			20/1	13	14	20/1					SPARE
SFP 3-5 (1 HP)	H		1.80		20/1	15	16	20/1					SPARE
SFP 3-6 (0.75 HP)	H			1.80	20/1	17	18	20/1					SPARE
SPARE						19	20		1.00			M	ROLL UP DOOR
SPARE					20/3	21	22	20/3		1.00		M	ROLL UP DOOR
SPARE						23	24				1.00	M	ROLL UP DOOR
SPARE					20/1	25	26	20/1					SPARE
SPARE					20/1	27	28	20/1					SPARE
SPARE					20/1	29	30	20/1					SPARE
SPARE					20/1	31	32	20/1					SPACE
SPARE					20/1	33	34	20/1					SPACE
SPARE					20/1	35	36	20/1					SPACE
SPACE					20/1	37	38	20/1					SPACE
SPACE					20/1	39	40	20/1					SPACE
SPACE					20/1	41	42	20/1					SPACE
		7.73	7.73	7.73					5.16	5.16	3.66		

DEMAND LOAD SUMMARY	CONN. KVA	DEMAND FACTOR	DEMAND KVA
TYPE "M": NON-CONTINUOUS / MISC. LOADS	3.00	100%	3.00
TYPE "L": LIGHTING / CONTINUOUS LOADS	0.00	125%	0.00
TYPE "R": RECEPTACLES (FIRST 10KVA)	0.00	100%	0.00
TYPE "R": RECEPTACLES (OVER 10KVA)	0.00	50%	0.00
TYPE "H": HVAC / MECHANICAL LOADS	34.17	100%	34.17
TOTALS:	37.17		37.17

PHASE A: 12.89 KVA
PHASE B: 12.89 KVA
PHASE C: 11.39 KVA

46.53 MAX AMPS / PHASE

PANEL LB

VOLTS: 120 / 208 V
PHASE: 3
WIRE: 4 W
BUSSING: 225A
POLES: 42P

-ALL BREAKERS TO BE SWITCH RATED

MAIN BRKR: MLO
FEEDER: SEE SCHEDULE
CONDUIT: SEE SCHEDULE
MOUNTED: SURFACE
AIC RATING: 22,000

LOAD DESCRIPTION	TYPE	A	B	C	BRKR.	CKT.	CKT.	BRKR.	A	B	C	TYPE	LOAD DESCRIPTION
MAIN WALL & EXT. RECP.	R	0.54			20/1	1	2	20/1	1.80			M	HAND DRYER
STORAGE ROOMS, VEST., BATH RMS.	R		1.08		20/1	3	4	20/1		1.80		M	HAND DRYER
WATER FOUNTAIN	R			0.50	20/1	5	6	20/1			0.54	R	COMMUNITY RM. RECP.
COPY MACHINE	R	1.80			20/1	7	8	20/1	0.20			M	DOOR ALARM
COPY MACHINE	R		1.80		20/1	9	10	20/1		0.18		R	EXT. RECP.
COPY MACHINE	R			1.80	20/1	11	12	20/1			0.50	M	MOTORIZED SHADES COMM. RM.
COPY ROOM RECP.	R	0.36			20/1	13	14	20/1	0.54			R	CHIDREN RECP.
STAFF & CHILDREN RECP.	R		0.54		20/1	15	16	20/1		0.20		M	DOOR ALARM
GARBAGE DISPOSAL	M			1.00	20/1	17	18	20/1			1.80	R	HAND DRYER
ROOF RECEPTACLES	R	0.54			20/1	19	20	20/1	1.08			R	STORY TIME AREA RECP.
LIGHTING CONTROLS	L		0.25		20/1	21	22	20/1		1.80		R	HAND DRYER
ELECTRICAL ROOM	R			0.36	20/1	23	24	20/1			0.20	M	DOOR ALARM
GARBAGE DISPOSAL 110	M	1.00			20/1	25	26	20/1	0.50			M	MOTORIZED SHADES STORY
REFRIGERATOR 110	R		1.20		20/1	27	28	20/1		1.00		M	GARBAGE DISP. STORY TIME
MICROWAVE 110	R			1.80	20/1	29	30	20/1			0.36	R	STORY TIME RECP.
RM. 110 RECP.	R	0.54			20/1	31	32	20/1	0.67			L	LTG – 129 STORY TIME
RM. 110 RECP.	R		0.36		20/1	33	34	20/1		0.72		L	LTG 107 TRACK
SPARE					20/1	35	36	20/1			0.50	M	FSD'S
SPARE					20/1	37	38	20/1	0.50			M	FSD'S
SPARE					20/1	39	40	20/1					SPARE
SPARE					20/1	41	42	20/1			1.80	R	COPY M/C
		4.78	5.23	5.46					5.29	5.70	5.70		

DEMAND LOAD SUMMARY	CONN. KVA	DEMAND FACTOR	DEMAND KVA
TYPE "M": NON-CONTINUOUS / MISC. LOADS	9.20	100%	9.20
TYPE "L": LIGHTING / CONTINUOUS LOADS	1.64	125%	2.05
TYPE "R": RECEPTACLES (FIRST 10KVA)	10.00	100%	10.00
TYPE "R": RECEPTACLES (OVER 10KVA)	11.32	50%	5.66
TYPE "H": HVAC / MECHANICAL LOADS	0.00	100%	0.00
TOTALS:	32.16		26.91

PHASE A: 10.07 KVA
PHASE B: 10.93 KVA
PHASE C: 11.16 KVA

93.00 MAX AMPS / PHASE

PANEL HC

VOLTS: 277 / 480 V
PHASE: 3
WIRE: 4 W
BUSSING: 225A
POLES: 42P

MAIN BRKR: MLO
FEEDER: SEE SCHEDULE
CONDUIT: SEE SCHEDULE
MOUNTED: SURFACE
AIC RATING: 22,000

LOAD DESCRIPTION	TYPE	A	B	C	BRKR.	CKT.	CKT.	BRKR.	A	B	C	TYPE	LOAD DESCRIPTION
SPARE					20/1	1	2	20/1	3.83			L	LTG ~ 147, 148, 140, 116 (QUAD B)
SPARE					20/1	3	4	20/1		3.83		L	LTG ~ 137-139, 141-146, 149 (QUAD B)
SPARE					20/1	5	6	20/1			2.79	L	LTG ~ 132, 133 (QUAD B)
LTG – 123 (QUAD A)	L	3.71			20/1	7	8	20/1	1.69			L	LTG ~ 134-136 (QUAD B)
LTG – 123 (QUAD A)	L		1.84		20/1	9	10	20/1		2.39		L	EXTERIOR LIGHTING
LTG – 123, 122, 121 (QUAD A)	L			2.10	20/1	11	12	20/1			1.75	L	EXTERIOR LIGHTING
LTG – 117 (QUAD A)	L	3.27			20/1	13	14	20/1	0.90			L	TREE UPLIGHTS
LTG – 117 (QUAD A)	L		3.06		20/1	15	16	20/1		0.20		L	SIGN LIGHTS
LTG – 117 (QUAD A)	L			3.04	20/1	17	18	20/1			0.40	L	SIGN LIGHTS
LTG – 117 (QUAD A)	L	3.55			20/1	19	20	20/1	0.60			L	TREE UPLIGHT AS.
LTG – 117 (QUAD A)	L		2.78		20/1	21	22	20/1		1.50		L	WALKWAY EM LIGHTS
LTG – 118	L			3.62	20/1	23	24	20/1			1.50	L	WALKWAY EM LIGHTS
LTG – 117 (QUAD B)	L	3.17			20/1	25	26	20/1	1.50			L	WALKWAY EM LIGHTS
LTG – 117 (QUAD B)	L		2.84		20/1	27	28	20/1		1.50		L	WALKWAY LIGHTS
LTG – 117 (QUAD B)	L			3.07	20/1	29	30	20/1			1.50	L	EXT. LIGHTS
LTG – 115 (QUAD B)	L	3.54			20/1	31	32	20/1					SPARE
LTG – 115 (QUAD B)	L		3.30		20/1	33	34	20/1					SPARE
LTG – 115 (QUAD B)	L			3.02	20/1	35	36	20/1					SPARE
SPARE					20/1	37	38	20/1					SPARE
SPARE					20/1	39	40	20/1					SPARE
SPARE					20/1	41	42	20/1					SPARE
		17.24	13.82	14.85					8.72	9.42	7.94		

DEMAND LOAD SUMMARY	CONN. KVA	DEMAND FACTOR	DEMAND KVA
TYPE "M": NON-CONTINUOUS / MISC. LOADS	0.00	100%	0.00
TYPE "L": LIGHTING / CONTINUOUS LOADS	71.99	125%	89.98
TYPE "R": RECEPTACLES (FIRST 10KVA)	0.00	100%	0.00
TYPE "R": RECEPTACLES (OVER 10KVA)	0.00	50%	0.00
TYPE "H": HVAC / MECHANICAL LOADS	0.00	100%	0.00
TOTALS:	71.99		89.98

PHASE A: 25.98 KVA
PHASE B: 23.24 KVA
PHASE C: 22.79 KVA

93.70 MAX AMPS / PHASE

FIELD PAOLI

Architecture
1045 Sansome St.
Suite 206
San Francisco
California, 94111
Tel. 415. 788. 6606
Fax 415. 788. 6650

SARATOGA COMMUNITY LIBRARY

SANTA CLARA COUNTY LIBRARY

13650 Saratoga Avenue
Saratoga, California 95070

O'MAHONY & MYER
ELECTRICAL and LIGHTING DESIGN
4340 REDWOOD HWY, SUITE 245
SAN RAFAEL, CALIFORNIA 94903
(415) 492-0420/FAX (415) 479-9662
www.ommconsulting.com

DATE OCTOBER 26, 2001

REVISIONS
BID SET

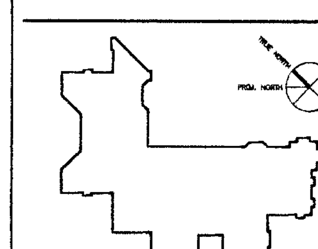

PANEL SCHEDULES

SCALE NONE
DRAWN BY OO
CHECKED BY NT/PC
JOB NO. 200095

PHASE - 2

SHEET NO. **E6.1**

All drawings and written material appearing herein constitute the original and unpublished work of the architect and the same may not be duplicated, used, or disclosed without the written consent of the architect ©Field Paoli

FILE: P:\2000\SARATOGA_LIBRARY-200095\CAD\E_61-SLib.dwg.DWG 11/02/01 at 14:32

SARATOGA_LIBRARY 200095
(USING ARIAL SHX FOR MISSING AlbertusExtraBold FONT)
FILE: P:\2000\SARATOGA_LIBRARY-200095\CAD\E_62-SLib.dwg.DWG 11/02/01 at 14:15

PANEL TC SECTION 1

VOLTS: 120 / 208 V; PHASE: 3; WIRE: 4 W; BUSSING: 225A; POLES: 42P

-* LOCK ON DEVICE

-200% RATED NEUTRAL BUS
-PROVIDE PANEL WITH TVSS
-TWO SECTION PANEL, SEE 5/E7.1
-ALL BREAKERS TO BE SWITCH RATED

MAIN BRKR: MLO; FEEDER: SEE SCHEDULE; CONDUIT: SEE SCHEDULE; MOUNTED: SURFACE; AIC RATING: 10,000

LOAD DESCRIPTION	TYPE	A	B	C	BRKR.	CKT.	CKT.	BRKR.	A	B	C	TYPE	LOAD DESCRIPTION
ADULT COLLECTIONS RECP.	R	0.90			20/1	1	2	20/1	0.36			R	ADULT COLLECTIONS FLOOR RECP.
ADULT COLLECTIONS RECP.	R		0.72		20/1	3	4	20/1		0.36		R	ADULT COLLECTIONS FLOOR RECP.
ADULT COLLECTIONS RECP.	R			0.90	20/1	5	6	20/1			0.36	R	ADULT COLLECTIONS FLOOR RECP.
ADULT COLLECTIONS FLOOR RECP.	R	0.36			20/1	7	8	20/1	0.36			R	ADULT COLLECTIONS FLOOR RECP.
ADULT COLLECTIONS FLOOR RECP.	R		0.36		20/1	9	10	20/1		0.36		R	ADULT COLLECTIONS FLOOR RECP.
ADULT COLLECTIONS FLOOR RECP.	R			0.36	20/1	11	12	20/1			0.36	R	ADULT COLLECTIONS FLOOR RECP.
ADULT COLLECTIONS FLOOR RECP.	R	0.36			20/1	13	14	20/1	0.36			R	ADULT COLLECTIONS FLOOR RECP.
ADULT COLLECTIONS FLOOR RECP.	R		0.36		20/1	15	16	20/1		0.36		R	ADULT COLLECTIONS FLOOR RECP.
READING ROOM RECP.	R			0.36	20/1	17	18	20/1			0.36	R	ADULT COLLECTIONS FLOOR RECP.
READING ROOM FLOOR RECP.	R	0.36			20/1	19	20	20/1	0.72			R	READING ROOM FLOOR RECP.
READING ROOM FLOOR RECP.	R		0.36		20/3	21	22	20/1		0.72		R	READING ROOM FLOOR RECP.
READING ROOM FLOOR RECP.	R			0.36	20/1	23	24	20/1			0.72	R	READING ROOM FLOOR RECP.
READING ROOM FLOOR RECP.	R	0.36			20/1	25	26	20/1	0.72			R	TEL REF ROOM RECP.
READING ROOM FLOOR RECP.	R		0.36		20/1	27	28	20/1		0.36		R	TEL REF ROOM RECP.
READING ROOM FLOOR RECP.	R			0.36	20/1	29	30	20/1			0.50	R	SECURITY PANEL *
READING ROOM FLOOR RECP.	R	0.36			20/1	31	32	20/1					SPARE
READING ROOM FLOOR RECP.	R		0.36		20/1	33	34	20/1		1.08		R	TEL RM. RECP.
SPARE					20/1	35	36	20/1			0.72	R	TEL RM. RECP.
SPARE					20/1	37	38	20/1	1.08			R	TEL RM. RECP.
SPARE					20/1	39	40	20/1					SPARE
SPARE					20/1	41	42	20/1					SPARE
		2.70	2.52	2.34					3.60	3.24	3.02		

DEMAND LOAD SUMMARY	CONN. KVA	DEMAND FACTOR	DEMAND KVA
TYPE "M": NON-CONTINUOUS / MISC. LOADS	0.00	100%	0.00
TYPE "L": LIGHTING / CONTINUOUS LOADS	0.00	125%	0.00
TYPE "R": RECEPTACLES (FIRST 10KVA)	10.00	100%	10.00
TYPE "R": RECEPTACLES (OVER 10KVA)	7.42	50%	3.71
TYPE "H": HVAC / MECHANICAL LOADS	0.00	100%	0.00
TOTALS:	17.42		13.71

PHASE A: 6.30 KVA
PHASE B: 5.76 KVA
PHASE C: 5.36 KVA

52.50 MAX AMPS / PHASE

PANEL TA SECTION 2

VOLTS: 120 / 208 V; PHASE: 3; WIRE: 4 W; BUSSING: 225A; POLES: 42P

-200% RATED NEUTRAL BUS
-PROVIDE PANEL WITH TVSS
-TWO SECTION PANEL, SEE 5/E7.2
-ALL BREAKERS TO BE SWITCH RATED

MAIN BRKR: MLO; FEEDER: SEE SCHEDULE; CONDUIT: SEE SCHEDULE; MOUNTED: SURFACE; AIC RATING: 14,000

LOAD DESCRIPTION	TYPE	A	B	C	BRKR.	CKT.	CKT.	BRKR.	A	B	C	TYPE	LOAD DESCRIPTION
TRAINING ROOM FLOOR RECP.	R	0.36			20/1	43	44	20/1	0.36			R	TRAINING ROOM FLOOR RECP.
TRAINING ROOM FLOOR RECP.	R		0.36		20/1	45	46	20/1		0.36		R	TRAINING ROOM RECP.
TRAINING ROOM FLOOR RECP.	R			0.36	20/1	47	48	20/1			0.36	R	TRAINING ROOM RECP.
TRAINING ROOM FLOOR RECP.	R	0.36			20/1	49	50	20/1	0.36			R	TRAINING ROOM RECP.
TRAINING ROOM FLOOR RECP.	R		0.36		20/1	51	52	20/1		0.36		R	TRAINING ROOM RECP.
TRAINING ROOM FLOOR RECP.	R			0.36	20/1	53	54	20/1			0.36	R	TRAINING ROOM RECP.
COMPUTER STORAGE RECP.	R	0.72			20/1	55	56	20/1	0.36			R	TRAINING ROOM RECP.
STUDY GROUP RECP.	R		0.72		20/1	57	58	20/1		0.36		R	TRAINING ROOM RECP.
STUDY GROUP RECP.	R			0.72	20/1	59	60	20/1			0.54	R	TRAINING ROOM RECP.
STUDY GROUP RECP.	R	1.08			20/1	61	62	20/1	0.36			R	TRAINING & CONFERENCE PROJECTOR
STUDY GROUP RECP.	R		0.90		20/3	63	64	20/1		0.72		R	MEDIA/BROWSING FLOOR RECP.
MEDIA/BROWSING FLOOR RECP.	R			0.72	20/1	65	66	20/1			0.72	R	MEDIA/BROWSING FLOOR RECP.
MEDIA/BROWSING FLOOR RECP.	R	0.72			20/1	67	68	20/1	0.72			R	FRIENDS LOUNGE
MEDIA/BROWSING RECP.	R		1.08		20/1	69	70	20/1		1.26		R	ENTRY & MAIN HALL
MEDIA/BROWSING RECP.	R			1.08	20/1	71	72	20/1			0.50	R	BOOK ALARMS
MEDIA/BROWSING RECP.	R	1.08			20/1	73	74	20/1	1.08			R	MAIN HALL RECP.
MEDIA/BROWSING RECP.	R		1.08		20/1	75	76	20/1		1.08		R	MAIN HALL RECP.
MEDIA/BROWSING RECP.	R			0.72	20/1	77	78	20/1			1.08	R	MAIN HALL RECP.
SPARE					20/1	79	80	20/1	1.08			R	MAIN HALL RECP.
SPARE					20/1	81	82	20/1					SPARE
SPARE					20/1	83	84	20/1					SPARE
		4.32	4.50	3.96					4.32	4.14	3.56		

DEMAND LOAD SUMMARY	CONN. KVA	DEMAND FACTOR	DEMAND KVA
TYPE "M": NON-CONTINUOUS / MISC. LOADS	0.00	100%	0.00
TYPE "L": LIGHTING / CONTINUOUS LOADS	0.00	125%	0.00
TYPE "R": RECEPTACLES (FIRST 10KVA)	10.00	100%	10.00
TYPE "R": RECEPTACLES (OVER 10KVA)	14.80	50%	7.40
TYPE "H": HVAC / MECHANICAL LOADS	0.00	100%	0.00
TOTALS:	24.80		17.40

PHASE A: 8.64 KVA
PHASE B: 8.64 KVA
PHASE C: 7.52 KVA

72.00 MAX AMPS / PHASE

PANEL PA

VOLTS: 120 / 208 V; PHASE: 3; WIRE: 4 W; BUSSING: 225A; POLES: 42P

MAIN BRKR: MLO; FEEDER: SEE SCHEDULE; CONDUIT: SEE SCHEDULE; MOUNTED: SURFACE; AIC RATING: 42,000

LOAD DESCRIPTION	TYPE	A	B	C	BRKR.	CKT.	CKT.	BRKR.	A	B	C	TYPE	LOAD DESCRIPTION
GH-1	H	0.25			15/1	1	2	15/1	0.40			H	EXHAUST FAN EF-3 (0.25HP)
GH-2	H		0.25		15/1	3	4	15/1		0.40		H	EXHAUST FAN EF-5 (0.25HP)
EXHAUST FAN EF-9 (0.25 HP)	H			0.40	15/1	5	6	15/1			0.40	H	EXHAUST FAN EF-6 (0.25HP)
EXHAUST FAN EF-10 (0.25 HP)	H	0.40			15/1	7	8	15/1	0.40			H	EXHAUST FAN EF-7 (0.25HP)
DSS OU-1 UNIT	H		1.92		20/2	9	10	20/1					SPARE
DSS OU-1 UNIT	H			1.92		11	12	20/1			1.20	H	SFP 1-7 (10A)
SPARE					20/1	13	14	20/1	1.20			H	SFP 1-8 (10A)
SPARE					20/1	15	16	20/1					SPARE
SPARE					20/1	17	18	20/1			0.84	H	SFP 2-1 (7A)
SPARE					20/1	19	20	20/1					SPARE
SPARE					20/3	21	22	20/1					SPARE
SPARE					20/1	23	24	20/1			0.24	H	DSS IU-1
SPARE					20/1	25	26	20/1	1.20			H	SFP 1-3 (10A)
SPARE					20/1	27	28	20/1					SPARE
SPARE					20/1	29	30	20/1					SPARE
SPACE					20/1	31	32	20/1					SPARE
SPACE					20/1	33	34	20/1					SPARE
SPACE					20/1	35	36	20/1					SPARE
SPACE					20/1	37	38	20/1					SPARE
SPACE					20/1	39	40	20/1					SPARE
SPACE					20/1	41	42	20/1					SPARE
		0.65	2.17	2.32					3.20	0.40	2.68		

DEMAND LOAD SUMMARY	CONN. KVA	DEMAND FACTOR	DEMAND KVA
TYPE "M": NON-CONTINUOUS / MISC. LOADS	0.00	100%	0.00
TYPE "L": LIGHTING / CONTINUOUS LOADS	0.00	125%	0.00
TYPE "R": RECEPTACLES (FIRST 10KVA)	0.00	100%	0.00
TYPE "R": RECEPTACLES (OVER 10KVA)	0.00	50%	0.00
TYPE "H": HVAC / MECHANICAL LOADS	11.42	100%	11.42
TOTALS:	11.42		11.42

PHASE A: 3.85 KVA
PHASE B: 2.57 KVA
PHASE C: 5.00 KVA

41.67 MAX AMPS / PHASE

PANEL TC SECTION 2

VOLTS: 120 / 208 V; PHASE: 3; WIRE: 4 W; BUSSING: 225A; POLES: 42P

-200% RATED NEUTRAL BUS
-PROVIDE PANEL WITH TVSS
-TWO SECTION PANEL, SEE 5/E7.1
-ALL BREAKERS TO BE SWITCH RATED

MAIN BRKR: MLO; FEEDER: SEE SCHEDULE; CONDUIT: SEE SCHEDULE; MOUNTED: SURFACE; AIC RATING: 10,000

LOAD DESCRIPTION	TYPE	A	B	C	BRKR.	CKT.	CKT.	BRKR.	A	B	C	TYPE	LOAD DESCRIPTION
ADULT COLLECTIONS FLOOR RECP.	R	0.72			20/1	43	44	20/1	0.72			R	ADULT COLLECTIONS FLOOR RECP.
ADULT COLLECTIONS FLOOR RECP.	R		0.36		20/1	45	46	20/1		0.72		R	ADULT COLLECTIONS FLOOR RECP.
ADULT COLLECTIONS FLOOR RECP.	R			0.36	20/1	47	48	20/1			0.72	R	ADULT COLLECTIONS FLOOR RECP.
ADULT COLLECTIONS FLOOR RECP.	R	0.36			20/1	49	50	20/1	0.72			R	ADULT COLLECTIONS FLOOR RECP.
ADULT COLLECTIONS FLOOR RECP.	R		0.36		20/1	51	52	20/1		0.72		R	ADULT COLLECTIONS FLOOR RECP.
ADULT COLLECTIONS FLOOR RECP.	R			0.36	20/1	53	54	20/1			0.72	R	ADULT COLLECTIONS FLOOR RECP.
ADULT COLLECTIONS FLOOR RECP.	R	0.72			20/1	55	56	20/1	0.72			R	ADULT COLLECTIONS RECP.
ADULT COLLECTIONS FLOOR RECP.	R		0.36		20/1	57	58	20/1		0.72		R	ADULT COLLECTIONS RECP.
ADULT COLLECTIONS FLOOR RECP.	R			0.72	20/1	59	60	20/1			0.72	R	ADULT COLLECTIONS RECP.
ADULT COLLECTIONS FLOOR RECP.	R	0.72			20/1	61	62	20/1	0.72			R	ADULT COLLECTIONS RECP.
ADULT COLLECTIONS COUNTER RECP.	R		1.08		20/3	63	64	20/1		0.72		R	ADULT COLLECTIONS RECP.
ADULT COLLECTIONS COUNTER RECP.	R			1.08	20/1	65	66	20/1			0.36	R	ADULT COLLECTIONS FLOOR RECP.
ADULT COLLECTIONS RECP.	R	0.72			20/1	67	68	20/1	0.36			R	ADULT COLLECTIONS FLOOR RECP.
ADULT COLLECTIONS RECP.	R		0.72		20/1	69	70	20/1		0.36		R	ADULT COLLECTIONS FLOOR RECP.
ADULT COLLECTIONS RECP.	R			1.08	20/1	71	72	20/1					SPARE
SPARE					20/1	73	74	20/1					SPARE
SPARE					20/1	75	76	20/1					SPARE
SPARE					20/1	77	78	20/1					SPARE
SPARE					20/1	79	80	20/1					SPARE
SPARE					20/1	81	82	20/1					SPARE
SPARE					20/1	83	84	20/1					SPARE
		3.24	2.88	3.60					3.24	3.24	2.52		

DEMAND LOAD SUMMARY	CONN. KVA	DEMAND FACTOR	DEMAND KVA
TYPE "M": NON-CONTINUOUS / MISC. LOADS	0.00	100%	0.00
TYPE "L": LIGHTING / CONTINUOUS LOADS	0.00	125%	0.00
TYPE "R": RECEPTACLES (FIRST 10KVA)	10.00	100%	10.00
TYPE "R": RECEPTACLES (OVER 10KVA)	8.72	50%	4.36
TYPE "H": HVAC / MECHANICAL LOADS	0.00	100%	0.00
TOTALS:	18.72		14.36

PHASE A: 6.48 KVA
PHASE B: 6.12 KVA
PHASE C: 6.12 KVA

54.00 MAX AMPS / PHASE

PANEL TB SECTION 1

VOLTS: 120 / 208 V; PHASE: 3; WIRE: 4 W; BUSSING: 225A; POLES: 42P

-200% RATED NEUTRAL BUS
-PROVIDE PANEL WITH TVSS
-TWO SECTION PANEL, SEE 5/E7.2
-ALL BREAKERS TO BE SWITCH RATED

MAIN BRKR: MLO; FEEDER: SEE SCHEDULE; CONDUIT: SEE SCHEDULE; MOUNTED: SURFACE; AIC RATING: 22,000

LOAD DESCRIPTION	TYPE	A	B	C	BRKR.	CKT.	CKT.	BRKR.	A	B	C	TYPE	LOAD DESCRIPTION
VESTIBULE	R	0.72			20/1	1	2	20/1	0.90			R	MAIN HALL RECP.
COMMUNITY ROOM FLOOR RECP.	R		1.08		20/1	3	4	20/1		0.72		R	MAIN HALL RECP.
COMMUNITY ROOM FLOOR RECP.	R			0.72	20/1	5	6	20/1			1.08	R	STAFF WORK ROOM RECP.
COMMUNITY ROOM FLOOR RECP.	R	0.72			20/1	7	8	20/1	0.72			R	STAFF WORK ROOM RECP.
COMMUNITY ROOM FLOOR RECP.	R		1.08		20/1	9	10	20/1		0.72		R	STAFF WORK ROOM RECP.
COMMUNITY ROOM FLOOR RECP.	R			1.08	20/1	11	12	20/1			0.72	R	STAFF WORK ROOM RECP.
COMMUNITY ROOM FLOOR RECP.	R	0.72			20/1	13	14	20/1	0.72			R	STAFF WORK ROOM RECP.
COMMUNITY ROOM RECP.	R		0.90		20/1	15	16	20/1		1.08		R	STAFF WORK ROOM RECP.
COMMUNITY ROOM RECP.	R			0.72	20/1	17	18	20/1			1.08	R	OFFICE 125 RECP.
PROJECTOR RECP.	R	0.36			20/1	19	20	20/1	0.72			R	CIRCUITS TO CEILING J-BOX 128
CHILDRENS RECP.	R		1.08		20/3	21	22	20/1		0.72		R	CIRCUITS TO CEILING J-BOX 128
COMMUNITY ROOM FLOOR RECP.	R			0.36	20/1	23	24	20/1			0.72	R	CIRCUITS TO CEILING J-BOX 128
SPARE					20/1	25	26	20/1					SPARE
SPARE					20/1	27	28	20/1		0.72		R	FLOOR RECP.
SPARE					20/1	29	30	20/1			0.72	R	FLOOR RECP.
SPARE					20/1	31	32	20/1					SPARE
SPARE					20/1	33	34	20/1					SPARE
SPARE					20/1	35	36	20/1					SPARE
SPARE					20/1	37	38	20/1					SPARE
SPARE					20/1	39	40	20/1					SPARE
SPARE					20/1	41	42	20/1					SPARE
		2.52	4.14	2.68					3.06	3.96	4.32		

DEMAND LOAD SUMMARY	CONN. KVA	DEMAND FACTOR	DEMAND KVA
TYPE "M": NON-CONTINUOUS / MISC. LOADS	0.00	100%	0.00
TYPE "L": LIGHTING / CONTINUOUS LOADS	0.00	125%	0.00
TYPE "R": RECEPTACLES (FIRST 10KVA)	10.00	100%	10.00
TYPE "R": RECEPTACLES (OVER 10KVA)	10.88	50%	5.44
TYPE "H": HVAC / MECHANICAL LOADS	0.00	100%	0.00
TOTALS:	20.88		15.44

PHASE A: 5.58 KVA
PHASE B: 6.10 KVA
PHASE C: 7.20 KVA

67.50 MAX AMPS / PHASE

PANEL PB

VOLTS: 120 / 208 V; PHASE: 3; WIRE: 4 W; BUSSING: 225A; POLES: 42P

MAIN BRKR: MLO; FEEDER: SEE SCHEDULE; CONDUIT: SEE SCHEDULE; MOUNTED: SURFACE; AIC RATING: 22,000

LOAD DESCRIPTION	TYPE	A	B	C	BRKR.	CKT.	CKT.	BRKR.	A	B	C	TYPE	LOAD DESCRIPTION
EXHAUST FAN EF-1 (0.5 HP)	H	0.53			20/1	1	2	15/1	0.40			H	EXHAUST FAN EF-8 (0.25 HP)
EXHAUST FAN EF-2 (0.25 HP)	H		0.40		15/1	3	4	15/1		0.40		H	EXHAUST FAN EF11 (0.25 HP)
EXHAUST FAN EF-4 (0.25 HP)	H			0.40	15/1	5	6	15/1			0.40	H	EXHAUST FAN EF-12 (0.25 HP)
SFP 3-8 (10A)	H	1.20			20/1	7	8	15/1	0.40			H	EXHAUST FAN EF-13 (0.25 HP)
SFP 3-9 (10A)	H		1.20		20/1	9	10	15/1		0.40		H	EXHAUST FAN EF-14 (0.25 HP)
SFP 3-11 (7A)	H			0.84	20/1	11	12	20/1					SPARE
SFP 3-12 (9.8A)	H	1.18			20/1	13	14	20/1					SPARE
SPARE					20/1	15	16	50/2		4.50		H	EWH-1 (9 KW)
SPARE					20/1	17	18				4.50	H	EWH-1 (9 KW)
SPARE					20/1	19	20	15/1	0.50			H	CP-1 (1/3 HP)
SPARE					20/3	21	22	15/1					SPARE
SPARE					20/1	23	24	20/1			0.10	H	MIXING VALVE MV-1
SPARE					20/1	25	26	20/1					SPARE
SPARE					20/1	27	28	20/1					SPARE
SPARE					20/1	29	30	20/1					SPARE
SPACE					20/1	31	32	20/1					SPARE
SPACE					20/1	33	34	20/1					SPARE
SPACE					20/1	35	36	20/1					SPARE
SPACE					20/1	37	38	20/1					SPARE
SPACE					20/1	39	40	20/1					SPARE
SPACE					20/1	41	42	20/1					SPARE
		2.91	1.60	1.24					1.30	5.30	5.00		

DEMAND LOAD SUMMARY	CONN. KVA	DEMAND FACTOR	DEMAND KVA
TYPE "M": NON-CONTINUOUS / MISC. LOADS	0.00	100%	0.00
TYPE "L": LIGHTING / CONTINUOUS LOADS	0.00	125%	0.00
TYPE "R": RECEPTACLES (FIRST 10KVA)	0.00	100%	0.00
TYPE "R": RECEPTACLES (OVER 10KVA)	0.00	50%	0.00
TYPE "H": HVAC / MECHANICAL LOADS	17.35	100%	17.35
TOTALS:	17.35		17.35

PHASE A: 4.21 KVA
PHASE B: 6.90 KVA
PHASE C: 6.24 KVA

57.50 MAX AMPS / PHASE

PANEL TB SECTION 2

VOLTS: 120 / 208 V; PHASE: 3; WIRE: 4 W; BUSSING: 225A; POLES: 42P

-200% RATED NEUTRAL BUS
-PROVIDE PANEL WITH TVSS
-TWO SECTION PANEL, SEE 5/E7.2
-ALL BREAKERS TO BE SWITCH RATED

MAIN BRKR: MLO; FEEDER: SEE SCHEDULE; CONDUIT: SEE SCHEDULE; MOUNTED: SURFACE; AIC RATING: 22,000

LOAD DESCRIPTION	TYPE	A	B	C	BRKR.	CKT.	CKT.	BRKR.	A	B	C	TYPE	LOAD DESCRIPTION
CHILDRENS SECT. FLOOR RECP.	R	0.36			20/1	43	44	20/1	0.36			R	CHILDRENS SECT. FLOOR RECP.
CHILDRENS SECT. FLOOR RECP.	R		0.36		20/1	45	46	20/1		0.36		R	CHILDRENS SECT. FLOOR RECP.
CHILDRENS SECT. FLOOR RECP.	R			0.36	20/1	47	48	20/1			0.36	R	CHILDRENS SECT. FLOOR RECP.
CHILDRENS SECT. FLOOR RECP.	R	0.36			20/1	49	50	20/1	0.36			R	CHILDRENS SECT. FLOOR RECP.
CHILDRENS SECT. FLOOR RECP.	R		0.36		20/1	51	52	20/1		0.36		R	CHILDRENS SECT. FLOOR RECP.
CHILDRENS SECT. FLOOR RECP.	R			0.36	20/1	53	54	20/1			0.36	R	CHILDRENS SECT. FLOOR RECP.
CHILDRENS SECT. FLOOR RECP.	R	0.36			20/1	55	56	20/1	0.36			R	CHILDRENS SECT. FLOOR RECP.
CHILDRENS SECT. FLOOR RECP.	R		0.36		20/1	57	58	20/1		0.36		R	CHILDRENS SECT. FLOOR RECP.
CHILDRENS SECT. FLOOR RECP.	R			0.36	20/1	59	60	20/1			0.36	R	CHILDRENS SECT. DESK
CHILDRENS SECT. FLOOR RECP.	R	0.36			20/1	61	62	20/1	0.36			R	CHILDRENS SECT. DESK
CHILDRENS SECT. FLOOR RECP.	R		0.36		20/3	63	64	20/1		0.36		R	CHILDRENS SECT. DESK
CHILDRENS SECT. FLOOR RECP.	R			0.36	20/1	65	66	20/1			1.08	R	CHILDRENS SECT. RECP.
PROJECTOR STORY TIME	R	0.36			20/1	67	68	20/1	0.72			R	TELECOM RM. RECP.
STORY TIME RECP.	R		0.54		20/1	69	70	20/1		0.72		R	TELECOM RM. RECP.
STORY TIME RECP.	R			0.54	20/1	71	72	20/1			0.72	R	TELECOM RM. RECP.
SPARE	R				20/1	73	74	20/1	0.72			R	TELECOM RM. RECP.
SPARE					20/1	75	76	20/1		0.36		R	TELECOM RM. RECP.
SPARE					20/1	77	78	20/1			0.36		SPARE
SPARE					20/1	79	80	20/1					SPARE
SPARE					20/1	81	82	20/1					SPARE
SPARE					20/1	83	84	20/1					SPARE
		1.80	1.98	1.98					2.88	2.52	3.24		

DEMAND LOAD SUMMARY	CONN. KVA	DEMAND FACTOR	DEMAND KVA
TYPE "M": NON-CONTINUOUS / MISC. LOADS	0.00	100%	0.00
TYPE "L": LIGHTING / CONTINUOUS LOADS	0.00	125%	0.00
TYPE "R": RECEPTACLES (FIRST 10KVA)	10.00	100%	10.00
TYPE "R": RECEPTACLES (OVER 10KVA)	4.04	50%	2.02
TYPE "H": HVAC / MECHANICAL LOADS	0.00	100%	0.00
TOTALS:	14.04		12.02

PHASE A: 4.68 KVA
PHASE B: 4.50 KVA
PHASE C: 5.22 KVA

43.50 MAX AMPS / PHASE

PANEL TA SECTION 1

VOLTS: 120 / 208 V; PHASE: 3; WIRE: 4 W; BUSSING: 225A; POLES: 42P

-ALL BREAKERS TO BE SWITCH RATED

-200% RATED NEUTRAL BUS
-PROVIDE PANEL WITH TVSS
-TWO SECTION PANEL, SEE 5/E7.2
-*LOCK ON DEVICE

MAIN BRKR: MLO; FEEDER: SEE SCHEDULE; CONDUIT: SEE SCHEDULE; MOUNTED: SURFACE; AIC RATING: 14,000

LOAD DESCRIPTION	TYPE	A	B	C	BRKR.	CKT.	CKT.	BRKR.	A	B	C	TYPE	LOAD DESCRIPTION
FIRE ALARM PANEL *	M	0.50			20/1	1	2	20/1	0.72			R	ADULT STAFF WORK RM. RECP.
CIRCUITS TO CEILING J-BOX-147	R		0.72		20/1	3	4	20/1		0.72		R	ADULT STAFF WORK RM. RECP.
CIRCUITS TO CEILING J-BOX-147	R			0.72	20/1	5	6	20/1			0.72	R	ADULT STAFF WORK RM. RECP.
CIRCUITS TO CEILING J-BOX-147	R	0.72			20/1	7	8	20/1	0.72			R	ADULT STAFF WORK RM. RECP.
RECEIVING RECP.	R		0.36		20/1	9	10	20/1		1.08		R	ADULT STAFF WORK RM. RECP.
SORTING RECP.	R			0.90	20/1	11	12	20/1			1.08	R	ADULT STAFF WORK RM. RECP.
SPARE					20/1	13	14	20/1	1.08			R	ADULT STAFF WORK RM. RECP.
PRINTER	R		1.00		20/1	15	16	20/1		0.72		R	ADULT STAFF WORK RM. RECP.
SPARE					20/1	17	18	20/1			0.72	R	OFFICE 148
CIRCUITS TO CEILING J-BOX-133	R	0.72			20/1	19	20	20/1	1.08			R	CIRCULATION STAFF RECP.
CIRCUITS TO CEILING J-BOX-133	R		0.72		20/3	21	22	20/1		1.08		R	CIRCULATION STAFF RECP.
CIRCUITS TO CEILING J-BOX-133	R			0.72	20/1	23	24	20/1			1.44	R	CIRCULATION STAFF RECP.
SORTING RECP.	R	1.08			20/1	25	26	20/1	1.44			R	CIRCULATION STAFF RECP.
SORTING RECP.	R		0.90		20/1	27	28	20/1		1.08		R	CIRCULATION STAFF RECP.
SORTING RECP.	R			1.08	20/1	29	30	20/1			1.08	R	CIRCULATION STAFF RECP.
SORTING RECP.	R	0.36			20/1	31	32	20/1	1.08			R	CIRCULATION STAFF RECP.
CONF. ROOM RECP.	R		0.90		20/1	33	34	20/1		1.08		R	CIRCULATION STAFF RECP.
SPARE					20/1	35	36	20/1			1.08	R	OFFICE 134, 135 RECP.
SPARE					20/1	37	38	20/1	0.72			R	OFFICE 135 RECP.
SPARE					20/1	39	40	20/1					SPARE
SPARE					20/1	41	42	20/1					SPARE
		3.36	4.60	3.42					6.84	5.76	6.12		

DEMAND LOAD SUMMARY	CONN. KVA	DEMAND FACTOR	DEMAND KVA
TYPE "M": NON-CONTINUOUS / MISC. LOADS	0.50	100%	0.50
TYPE "L": LIGHTING / CONTINUOUS LOADS	0.00	125%	0.00
TYPE "R": RECEPTACLES (FIRST 10KVA)	10.00	100%	10.00
TYPE "R": RECEPTACLES (OVER 10KVA)	19.62	50%	9.81
TYPE "H": HVAC / MECHANICAL LOADS	0.00	100%	0.00
TOTALS:	30.12		20.31

PHASE A: 10.22 KVA
PHASE B: 10.36 KVA
PHASE C: 9.54 KVA

86.33 MAX AMPS / PHASE

FIELD PAOLI

Architecture
1045 Sansome St.
Suite 206
San Francisco
California, 94111
Tel. 415. 788. 6606
Fax 415. 788. 6650

SARATOGA COMMUNITY LIBRARY

SANTA CLARA COUNTY LIBRARY

13650 Saratoga Avenue
Saratoga, California 95070

O'MAHONY & MYER
ELECTRICAL and LIGHTING DESIGN
4340 REDWOOD HWY, SUITE 245
SAN RAFAEL, CALIFORNIA 94903
(415) 492-0420/FAX (415) 479-9662
www.ommconsulting.com

DATE OCTOBER 26, 2001

REVISIONS
BID SET

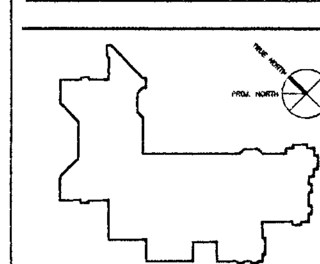

PANEL SCHEDULES

SCALE NONE
DRAWN BY OO/TV
CHECKED BY NT/PC
JOB NO. 200095

PHASE - 2

SHEET NO. E6.2

All drawings and written material appearing herein constitute the original and unpublished work of the architect and the same may not be duplicated, used, or disclosed without the written consent of the architect ©Field Paoli

SARATOGA_LIBRARY_200095
(USING ARIAL.SHX FOR MISSING AlbertusExtraBold FONT)
FILE: P:\2000\SARATOGA_LIBRARY-200095\CAD\E_63-SLib.dwg.DWG 11/20/01 at 07:09

LOW VOLTAGE RELAY SCHEDULE - LCP4

RELAY No.	DESCRIPTION	LINE V. CIRCUIT	LOAD VA	SWITCHING LOCAL SWITCH No.	MASTER SWITCH No.	TIME CLOCK EXTERIOR SCHEDULE	PHOTOCELL OVERRIDE
1	MENS 105			ga			
2	MENS 105			gb			
3	WOMENS 106			gc			
4	WOMENS 106			gd			
5	JANITOR 104			ge			
6	VESTIBULE 102			gf			
7	VESTIBULE 102			gg			
8	CUSTODIAL STORAGE 103			gh			
9	CUSTODIAL STORAGE 103			gj			
10	COMMUNITY STORAGE 108			gk			
11	COMMUNITY STORAGE 108			gm			
12	PANTRY 110			gn			
13	TELECOM 111			gp			
14	COMMUNITY ROOM 107			gq			
15	COMMUNITY ROOM 107			gr			
16	COMMUNITY ROOM 107			gs			
17	COMMUNITY ROOM 107			gt			
18	COMMUNITY ROOM 107			gu			
19	COMMUNITY ROOM 107 – TRACK	LB-34		gv			
20	COMMUNITY ROOM 107 – INC. WALL WASH			gw			
21	COMMUNITY ROOM 107			gx			
22	CLOSET 126A			gy			
23	SPARE			gz			
24	SPARE						
25	SPARE						
26	SPARE						
27	SPARE						
28	SPARE						
29	SPARE						
30	SPARE						
31	SPARE						
32	SPARE						
33	SPARE						
34	SPARE						
35	SPARE						
36	SPARE						
37	SPARE						
38	SPARE						
39	SPARE						
40	SPARE						
41	SPARE						
42	SPARE						
43	SPARE						
44	SPARE						
45	SPARE						
46	SPARE						
47	SPARE						
48	SPARE						

1. ALL ZONE, MASTER, TIME CLOCK AND PHOTOCELL INPUTS TO RELAYS SHALL BE "SOFT WIRED" VIA PROGRAMMABLE SYSTEM SWITCHES.

LOW VOLTAGE RELAY SCHEDULE - LCP3

RELAY No.	DESCRIPTION	LINE V. CIRCUIT	LOAD VA	SWITCHING LOCAL SWITCH No.	MASTER SWITCH No.	TIME CLOCK EXTERIOR SCHEDULE	PHOTOCELL OVERRIDE
1	ENTRY FOYER 101			ea			
2	ENTRY FOYER 101			eb			
3	ENTRY FOYER 101			ec			
4	MAIN HALL 112			ed			
5	MAIN HALL 112			ee			
6	MAIN HALL 112			ef			
7	MAIN HALL 112			eg			
8	MAIN HALL 112			eh			
9	MAIN HALL 112			ej			
10	MAIN HALL 112			ek			
11	MAIN HALL 112			em			
12	FRIENDS LOUNGE 113			en			
13	FRIENDS LOUNGE 113			ep			
14	FRIENDS LOUNGE 113			eq			
15	CHILDRENS COLLECTIONS			er			
16	CHILDRENS COLLECTIONS			es			
17	CHILDRENS COLLECTIONS			et			
18	CHILDRENS COLLECTIONS			eu			
19	CHILDRENS COLLECTIONS			ev			
20	CHILDRENS COLLECTIONS			ew			
21	CHILDRENS COLLECTIONS			ex			
22	CHILDRENS COLLECTIONS			ey			
23	CHILDRENS COLLECTIONS			ez			
24	CHILDRENS COLLECTIONS			fa			
25	CHILDRENS COLLECTIONS			fb			
26	CHILDRENS COLLECTIONS			fc			
27	CHILDRENS COLLECTIONS			fd			
28	CHILDRENS COLLECTIONS			fe			
29	CHILDRENS COLLECTIONS			ff			
30	STORY TIME 129			fg			
31	STORY TIME 129			fh			
32	STORY TIME 129			fj			
33	STORY TIME 129			fk			
34	PUPPET AREA			fm			
35	PUPPET AREA			fn			
36	PUPPET AREA			fp			
37	STORAGE 131			fq			
38	FAMILY TOILET 128			fr			
39	FAMILY TOILET 127			fs			
40	STORAGE 130			ft			
41	OFFICE 125			fu			
42	OFFICE 125			fv			
43	COPY 114			fw			
44	COPY 114			fx			
45	CHILDRENS STAFF WORKROOM 126			fy			
46	CHILDRENS STAFF WORKROOM 126			fz			
47	SPARE						
48	SPARE						

1. ALL ZONE, MASTER, TIME CLOCK AND PHOTOCELL INPUTS TO RELAYS SHALL BE "SOFT WIRED" VIA PROGRAMMABLE SYSTEM SWITCHES.

LOW VOLTAGE RELAY SCHEDULE - LCP2

RELAY No.	DESCRIPTION	LINE V. CIRCUIT	LOAD VA	SWITCHING LOCAL SWITCH No.	MASTER SWITCH No.	TIME CLOCK EXTERIOR SCHEDULE	PHOTOCELL OVERRIDE
1	MEDIA BROWSING 115	HC-29		ca			
2	MEDIA BROWSING 115	HC-29		cb			
3	MEDIA BROWSING 115	HC-33		cc			
4	MEDIA BROWSING 115	HC-33		cd			
5	MEDIA BROWSING 115	HC-35		ce			
6	MEDIA BROWSING 115	HC-35		cf			
7	MEDIA BROWSING 115	HC-35		cg			
8	MEDIA BROWSING 115A	HC-31		ch			
9	MEDIA BROWSING 115A	HC-31		cj			
10	MEDIA BROWSING 115A	HC-31		ck			
11	MEDIA BROWSING 115A	HC-31		cm			
12	MEDIA BROWSING 115B	HC-31		cn			
13	MEDIA BROWSING 115B	HC-31		cp			
14	MEDIA BROWSING 115B	HC-31		cq			
15	MEDIA BROWSING 115B	HC-31		cr			
16	STAFF LOUNGE 146	HC-4		cs			
17	STAFF LOUNGE 146	HC-4		ct			
18	STAFF LOUNGE 146	HC-4		cu			
19	STAFF ENTRY 143	HC-4		cv			
20	STAFF TOILET 144	HC-4		cw			
21	STAFF TOILET 145	HC-4		cx			
22	COMPUTER STOR 142	HC-4		cy			
23	STAFF COPY 141	HC-4		cz			
24	SUPPLY STOR 138	HC-4		da			
25	RECEIVING 137	HC-4		db			
26	FRIENDS SORTING 139	HC-4		dc			
27	FRIENDS SORTING 139	HC-4		dd			
28	SORTING 132	HC-6		de			
29	SORTING 132	HC-6		df			
30	CIRCULATION STAFF WORKROOM 133	HC-6		dg			
31	CIRCULATION STAFF WORKROOM 133	HC-6		dh			
32	CONFERENCE 136	HC-8		dj			
33	CONFERENCE 136	HC-8		dk			
34	OFFICE 135	HC-8		dm			
35	OFFICE 135	HC-8		dn			
36	OFFICE 134	HC-8		dp			
37	OFFICE 134	HC-8		dq			
38	SPARE			dr			
39	SPARE			ds			
40	SPARE			dt			
41	SPARE			du			
42	SPARE			dv			
43	SPARE			dw			
44	SPARE			dx			
45	EXTERIOR BLDG LIGHTS			dy			
46	EXTERIOR BLDG LIGHTS			dz			
47	SPARE						
48	SPARE						

1. ALL ZONE, MASTER, TIME CLOCK AND PHOTOCELL INPUTS TO RELAYS SHALL BE "SOFT WIRED" VIA PROGRAMMABLE SYSTEM SWITCHES.

LOW VOLTAGE RELAY SCHEDULE - LCP1

RELAY No.	DESCRIPTION	LINE V. CIRCUIT	LOAD VA	SWITCHING LOCAL SWITCH No.	MASTER SWITCH No.	TIME CLOCK EXTERIOR SCHEDULE	PHOTOCELL OVERRIDE
1	ADULT COLLECTIONS – EAST			aa			
2	ADULT COLLECTIONS – EAST			ab			
3	ADULT COLLECTIONS – EAST			ac			
4	ADULT COLLECTIONS – EAST			ad			
5	ADULT COLLECTIONS – EAST			ae			
6	ADULT COLLECTIONS – EAST			af			
7	ADULT COLLECTIONS – EAST			ag			
8	ADULT COLLECTIONS – WEST			ah			
9	ADULT COLLECTIONS – WEST			aj			
10	ADULT COLLECTIONS – WEST			ak			
11	ADULT COLLECTIONS – WEST			am			
12	ADULT COLLECTIONS – WEST			an			
13	ADULT COLLECTIONS – WEST			ap			
14	ADULT COLLECTIONS – WEST			aq			
15	ADULT COLLECTIONS – WEST			ar			
16	ADULT COLLECTIONS – WEST			as			
17	ADULT COLLECTIONS – WEST			at			
18	ADULT COLLECTIONS – WEST			au			
19	ADULT COLLECTIONS – WEST			av			
20	ADULT COLLECTIONS – WEST			aw			
21	ADULT COLLECTIONS – WEST			ax			
22	ADULT COLLECTIONS – WEST			ay			
23	ADULT STAFF WORKROOM 147 – DAYLIGHT	HC-2		az			
24	READING ROOM 123	HC-7		ba			
25	READING ROOM 123	HC-7		bb			
26	READING ROOM 123	HC-11		bc			
27	CLOSET 121	HC-11		bd			
28	CLOSET 122	HC-11		be			
29	TEL REFERENCE 119	HC-27		bf			
30	TELECOM 120	HC-27		bg			
31	GROUP STUDY 118	HC-27		bh			
32	GROUP STUDY 118	HC-27		bj			
33	GROUP STUDY 118	HC-27		bk			
34	INFORMATION DESK AREA	HC-29		bm			
35	INFORMATION DESK AREA	HC-29		bn			
36	INFORMATION DESK AREA	HC-29		bp			
37	INFORMATION DESK AREA	HC-29		bq			
38	ADULT STAFF WORKROOM 147	HC-2		br			
39	ADULT STAFF WORKROOM 147	HC-2		bs			
40	HALL 140	HC-2		bt			
41	OFFICE 148	HC-2		bu			
42	OFFICE 148	HC-2		bv			
43	TRAINING ROOM 116	HC-2		bw			
44	TRAINING ROOM 116	HC-2		bx			
45	TRAINING ROOM 116	HC-2		by			
46	TRAINING ROOM 116	HC-2		bz			
47	SPARE						
48	SPARE						

1. ALL ZONE, MASTER, TIME CLOCK AND PHOTOCELL INPUTS TO RELAYS SHALL BE "SOFT WIRED" VIA PROGRAMMABLE SYSTEM SWITCHES.

LOW VOLTAGE RELAY SCHEDULE - LCP5

RELAY No.	DESCRIPTION	LINE V. CIRCUIT	LOAD VA	SWITCHING LOCAL SWITCH No.	MASTER SWITCH No.	TIME CLOCK EXTERIOR SCHEDULE	PHOTOCELL OVERRIDE
1	SPARE			ha			
2	SPARE			hb			
3	SPARE			hc			
4	SPARE			hd			
5	SPARE			he			
6	SPARE			hf			
7	SPARE			hg			
8	EXTERIOR BUILDING (1)	HD-18		hh			
9	TRASH ENCLOSURE	HC-26		hj			
10	SIGNAGE	HC-16		hk			
11	GROUND UPLIGHTS	HC-20		hm			
12	GROUND UPLIGHTS	HC-14		hn			
13	METAL HALIDE BOLLARD	HC-28		hp			
14	METAL HALIDE BOLLARD	HC-30		hq			
15	WALKWAY	HC-22		hr			
16	WALKWAY	HC-24		hs			
17	WALKWAY	HC-26		ht			
18	WALKWAY POST-TOP	HC-13		hu			
19	WALKWAY	HC-7		hv			
20	WALKWAY	HC-9		hw			
21	PARKING	HC-10		hx			
22	PARKING	HC-11		hy			
23	PARKING	HC-12		hz			
24-48	SPARE						

1. ALL ZONE, MASTER, TIME CLOCK AND PHOTOCELL INPUTS TO RELAYS SHALL BE "SOFT WIRED" VIA PROGRAMMABLE SYSTEM SWITCHES.
2. PROVIDE 48 RELAY PANEL TO MATCH OTHERS.

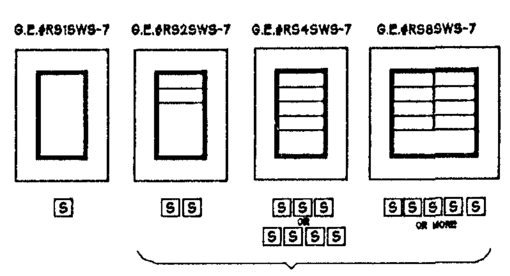

NOTES:
1. ENGRAVE EACH PUSHBUTTON WITH DESCRIPTIVE LABEL. FILL ENGRAVINGS WITH BLACK ENAMEL PAINT.
2. ENGRAVE EACH MASTER ROOM SWITCH AS DIRECTED.
3. SEE SPEC'S.
4. SEE PLANS.
5. SEE SYMBOL LIST.

TYPICAL WALL SWITCH CONFIGURATIONS (4/E6.3)
SCALE: NONE
FILE:

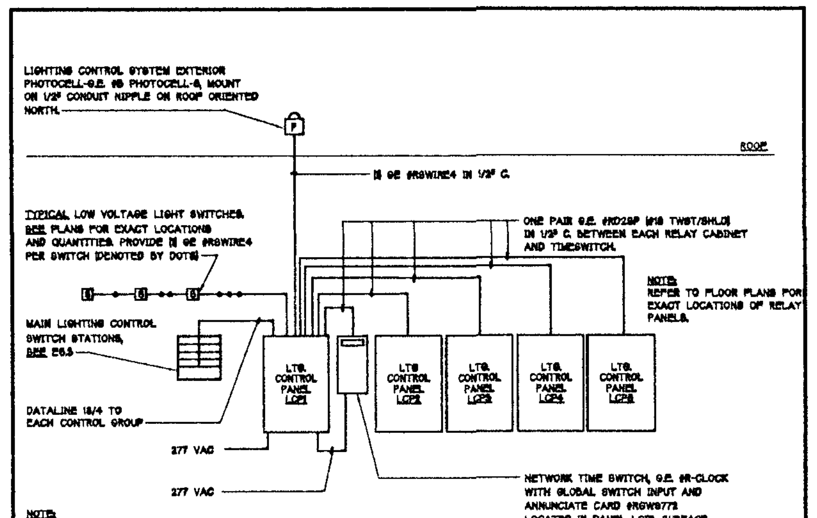

NOTE: ALL EQUIPMENT MODEL NUMBERS ARE GENERAL ELECTRIC LOW VOLTAGE LIGHTING CONTROLS.

LOW VOLTAGE LIGHTING CONTROL CONNECTION DIAGRAM (1/E6.3)
SCALE: NONE
FILE: U:\W...\LTGCNTL

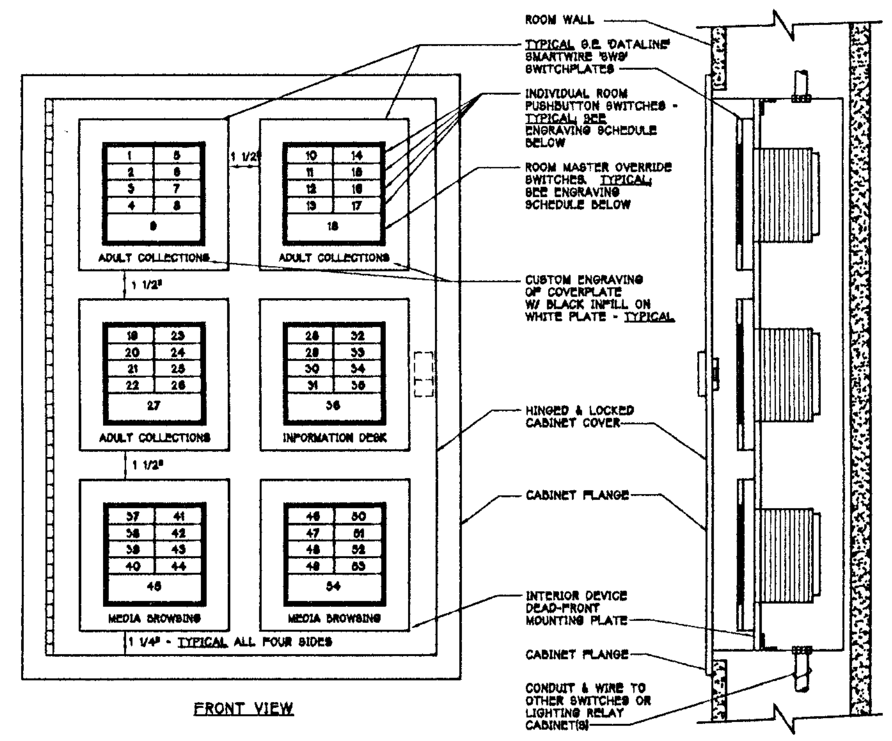

FRONT VIEW

SECTION VIEW

CABINET FABRICATION NOTES:
1. PROVIDE CUSTOM FABRICATED, FLUSH MOUNTED NEMA 1 ENCLOSURE W/ HINGED & LATCHED FRONT COVER, KEYED TO MATCH OTHER LIGHTING CONTROL CABINETS, AND WITH INTERIOR, DEAD FRONT DEVICE MOUNTING PLATE.
2. SEE LIST BELOW FOR INDIVIDUAL SWITCH ENGRAVING SCHEDULE.
3. CABINET TO BE FABRICATED FROM MIN. 18 GA. STAINLESS STEEL, FINISH AS DIRECTED BY THE ARCHITECT.

ENGRAVING SCHEDULE - ADULT COLLECTIONS

DESIG	LABEL	SWITCH	DESIG	LABEL	SWITCH
1	PERIMETER WALLWASH DNLTS.	aa	5	DECORATIVE PENDANTS	ae
2	DECORATIVE SCONCES	ab	6	DECORATIVE PENDANTS	af
3	LINEAR PENDANTS	ac	7	DECORATIVE PENDANTS	ag
4	LINEAR PENDANTS	ad	8	DECORATIVE PENDANTS	ae
9	ADULT COLLECTIONS - EAST				aa, ab, ac, ad, ae, af, ag, ae

ENGRAVING SCHEDULE - ADULT COLLECTIONS

DESIG	LABEL	SWITCH	DESIG	LABEL	SWITCH
10	DECORATIVE PENDANTS	ah	14	DECORATIVE PENDANTS	an
11	DECORATIVE PENDANTS	aj	15	DECORATIVE PENDANTS	ap
12	LINEAR PENDANTS	ak	16	PERIMETER WALLWASH, DNLTS.	aq
13	LINEAR PENDANTS	am	17	DECORATIVE SCONCES	ar
18	ADULT COLLECTIONS CENTER				ah, aj, ak, am, an, ap

ENGRAVING SCHEDULE - ADULT COLLECTIONS

DESIG	LABEL	SWITCH	DESIG	LABEL	SWITCH
19	DECORATIVE PENDANTS	at	23	DECORATIVE PENDANTS	ax
20	DECORATIVE PENDANTS	au	24	DECORATIVE PENDANTS	ax
21	LINEAR PENDANTS	av	25	READING RM PENDANTS	ba, bb
22	LINEAR PENDANTS	aw	26	READIND RM WALLWASH	bc
27	ADULT COLLECTIONS - WEST				at, au, av, aw, ax, ay

ENGRAVING SCHEDULE- INFOR. DESK, GROUP STUDY

DESIG	LABEL	SWITCH	DESIG	LABEL	SWITCH
28	DECORATIVE PENDANT	bm	32	GROUP STUDY PENDANTS	bh
29	DECORATIVE PENDANT	bn	33	GROUP STUDY PENDANTS	bj
30	DOWNLIGHTS	bp	34	GROUP STUDY WALLWASH	bk
31	WALLWASHERS	bq	35	SPARE	
36	INFORMATION DESK				bm, bn, bp, bq

ENGRAVING SCHEDULE - MEDIA BROWSING

DESIG	LABEL	SWITCH	DESIG	LABEL	SWITCH
37	LINEAR PENDANTS	ca	41	DECORATIVE PENDANTS	ce
38	LINEAR PENDANTS	cb	42	LINEAR WALL	cf
39	LINEAR PENDANTS	cc	43	DECORATIVE PENDANTS	cg
40	LINEAR PENDANTS	cd	44		
45	MEDIA BROWSING - MAIN AREA				ca, cb, cc, cd, ce, cf, cg

ENGRAVING SCHEDULE - MEDIA BROWSING

DESIG	LABEL	SWITCH	DESIG	LABEL	SWITCH
46	LINEAR PENDANTS	ch	50	LINEAR PENDANTS	cn
47	LINEAR PENDANTS	cj	51	LINEAR PENDANTS	cp
48	DECORATIVE PENDANTS	ck	52	LINEAR WALLWASH	cq
49	LINEAR WALLWASH	cm	53	DOWNLIGHTS	cr
54	MEDIA BROWSING - SECONDARY				ch, cj, ck, cm, cn, cp, cq, cr

NOTE: ALL G.E. 'SWS' DATALINE PUSHBUTTON SWITCHES ARE TO BE CUSTOM ENGRAVED - BLACK INFILL ON WHITE PUSHBUTTONS - AS NOTED IN SCHEDULES ABOVE OR AS DIRECTED/ APPROVED BY THE ARCHITECT.

MASTER LIGHTING CONTROL STATION - ADULT COLLECTIONS, INFORMATION DESK, MEDIA BROWSING (2/E6.3)
SCALE: NONE
FILE:

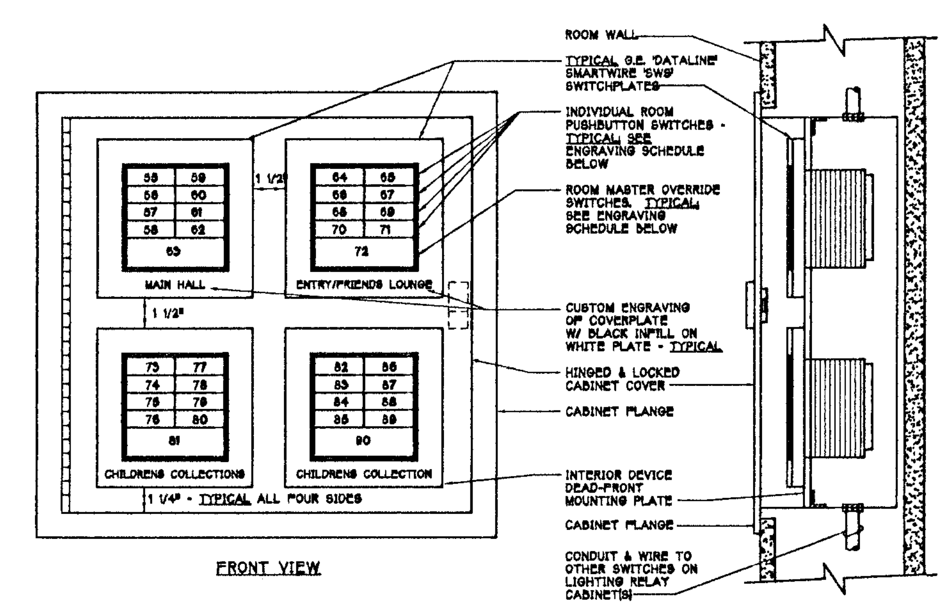

FRONT VIEW

SECTION VIEW

CABINET FABRICATION NOTES:
1. PROVIDE CUSTOM FABRICATED, FLUSH MOUNTED NEMA 1 ENCLOSURE W/ HINGED & LATCHED FRONT COVER, KEYED TO MATCH OTHER LIGHTING CONTROL CABINETS, AND WITH INTERIOR, DEAD FRONT DEVICE MOUNTING PLATE.
2. SEE LIST BELOW FOR INDIVIDUAL SWITCH ENGRAVING SCHEDULE.
3. CABINET TO BE FABRICATED FROM MIN. 18 GA. STAINLESS STEEL, FINISH AS DIRECTED BY THE ARCHITECT.

ENGRAVING SCHEDULE - MAIN HALL

DESIG	LABEL	SWITCH	DESIG	LABEL	SWITCH
55	METAL HALIDE PENDANT	ed	59	DOWNLIGHTS	ej
56	LINEAR WALL FLUORESCENT	ef	60	WALLWASHERS	ek
57	LINEAR WALLWASHER	eg	61	WALLWASHERS	em
58	TABLE FLUORESCENT	eh	62	SPARE	
63	MAIN HALL				ef, ef, eg, eh, ej, ek, em

ENGRAVING SCHEDULE - ENTRY/FRIENDS LOUNGE

DESIG	LABEL	SWITCH	DESIG	LABEL	SWITCH
64	METAL HALIDE PENDANTS	ea	68	METAL HALIDE PENDANT	en
65	LINEAR WALL	eb	69	LINEAR WALL	ep
66	LINEAR WALLWASHERS	ec	70	LINEAR WALLWASHERS	eq
67			71		
72	ENTRY/FRIENDS LOUNGE				ec, eb, ec, en, ep, eq

ENGRAVING SCHEDULE - CHILDRENS COLLECTION

DESIG	LABEL	SWITCH	DESIG	LABEL	SWITCH
73	LINEAR PENDANTS	er	77	LINEAR WALL	ev
74	LINEAR PENDANTS	es	78	DECORATIVE PENDANT	ew
75	PERIMETER WALLWASH	et	79	DOWNLIGHT	ex
76	WALLWASHERS	eu	80	DOWNLIGHT	ex
81	CHILDREN COLLECTIONS				er, es, et, eu, ev, ew, ex, ey

ENGRAVING SCHEDULE - 'MLC'

DESIG	LABEL	SWITCH	DESIG	LABEL	SWITCH
82	PARABOLICS	ez,	86	LINEAR WALLWASHERS	fb
83	PARABOLICS	fa	87	LINEAR WALLWASHERS	fe
84	PARABOLICS	fc	88	DECORATIVE SCONCES	ff
85	PARABOLICS	fd	89	STORY TIME	fg, fh, fj, fk
90	MAIN HALL				ez, fa, fb, fc, fd, fe, ff

NOTE: ALL G.E. 'SWS' DATALINE PUSHBUTTON SWITCHES ARE TO BE CUSTOM ENGRAVED - BLACK INFILL ON WHITE PUSHBUTTONS - AS NOTED IN SCHEDULES ABOVE OR AS DIRECTED/ APPROVED BY THE ARCHITECT.

MASTER LIGHTING CONTROL STATION - MAIN HALL, ENTRY, CHILDRENS COLLECTIONS (3/E6.3)
SCALE: NONE
FILE:

FIELD PAOLI
Architecture
1045 Sansome St.
Suite 206
San Francisco
California, 94111
Tel. 415. 788. 6606
Fax 415. 788. 6650

SARATOGA COMMUNITY LIBRARY

SANTA CLARA COUNTY LIBRARY

13650 Saratoga Avenue
Saratoga, California 95070

O'MAHONY & MYER
ELECTRICAL and LIGHTING DESIGN
4340 REDWOOD HWY, SUITE 245
SAN RAFAEL, CALIFORNIA 94903
(415) 492-0420/FAX (415) 479-9662
www.ommconsulting.com

DATE: JANUARY 25, 2002

REVISIONS
CONFORM SET RE-PLOT

1	ADDENDUM #1	11/20/01
2	ADDENDUM #2	12/03/01
3	ADDENDUM #3	12/04/01
4	ADDENDUM #4	12/27/01

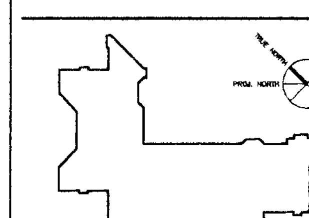

LIGHTING CONTROL SCHEDULES & DIAGRAMS

SCALE	NONE
DRAWN BY	OO/RS
CHECKED BY	NT/PC
JOB NO.	200095

PHASE - 2

SHEET NO. E6.3

All drawings and written material appearing herein constitute the original and unpublished work of the architect and the same may not be duplicated, used, or disclosed without the written consent of the architect ©Field Paoli

LOW VOLTAGE RELAY SCHEDULE - LCP4

RELAY No.	DESCRIPTION	LINE V. CIRCUIT	LOAD VA	SWITCHING LOCAL SWITCH No.	MASTER SWITCH No.	TIME CLOCK EXTERIOR SCHEDULE	PHOTOCELL OVERRIDE
1	MENS 105			ga			
2	MENS 105			gb			
3	WOMENS 106			gc			
4	WOMENS 106			gd			
5	JANITOR 104			ge			
6	VESTIBULE 102			gf			
7	VESTIBULE 102			gg			
8	CUSTODIAL STORAGE 103			gh			
9	CUSTODIAL STORAGE 103			gj			
10	COMMUNITY STORAGE 108			gk			
11	COMMUNITY STORAGE 108			gm			
12	PANTRY 110			gn			
13	TELECOM 111			gp			
14	COMMUNITY ROOM 107			gq			
15	COMMUNITY ROOM 107			gr			
16	COMMUNITY ROOM 107			gs			
17	COMMUNITY ROOM 107			gt			
18	COMMUNITY ROOM 107			gu			
19	COMMUNITY ROOM 107 – TRACK	LB–34		gv			
20	COMMUNITY ROOM 107 – INC. WALL WASH			gw			
21	COMMUNITY ROOM 107			gx			
22	CLOSET 126A			gy			
23	SPARE			gz			
24	SPARE						
25	SPARE						
26	SPARE						
27	SPARE						
28	SPARE						
29	SPARE						
30	SPARE						
31	SPARE						
32	SPARE						
33	SPARE						
34	SPARE						
35	SPARE						
36	SPARE						
37	SPARE						
38	SPARE						
39	SPARE						
40	SPARE						
41	SPARE						
42	SPARE						
43	SPARE						
44	SPARE						
45	SPARE						
46	SPARE						
47	SPARE						
48	SPARE						

1. ALL ZONE, MASTER, TIME CLOCK AND PHOTOCELL INPUTS TO RELAYS SHALL BE "SOFT WIRED" VIA PROGRAMMABLE SYSTEM SWITCHES.

LOW VOLTAGE RELAY SCHEDULE - LCP3

RELAY No.	DESCRIPTION	LINE V. CIRCUIT	LOAD VA	SWITCHING LOCAL SWITCH No.	MASTER SWITCH No.	TIME CLOCK EXTERIOR SCHEDULE	PHOTOCELL OVERRIDE
1	ENTRY FOYER 101			ea			
2	ENTRY FOYER 101			eb			
3	ENTRY FOYER 101			ec			
4	MAIN HALL 112			ed			
5	MAIN HALL 112			ee			
6	MAIN HALL 112			ef			
7	MAIN HALL 112			eg			
8	MAIN HALL 112			eh			
9	MAIN HALL 112			ej			
10	MAIN HALL 112			ek			
11	MAIN HALL 112			em			
12	FRIENDS LOUNGE 113			en			
13	FRIENDS LOUNGE 113			ep			
14	FRIENDS LOUNGE 113			eq			
15	CHILDRENS COLLECTIONS			er			
16	CHILDRENS COLLECTIONS			es			
17	CHILDRENS COLLECTIONS			et			
18	CHILDRENS COLLECTIONS			eu			
19	CHILDRENS COLLECTIONS			ev			
20	CHILDRENS COLLECTIONS			ew			
21	CHILDRENS COLLECTIONS			ex			
22	CHILDRENS COLLECTIONS			ey			
23	CHILDRENS COLLECTIONS			ez			
24	CHILDRENS COLLECTIONS			fa			
25	CHILDRENS COLLECTIONS			fb			
26	CHILDRENS COLLECTIONS			fc			
27	CHILDRENS COLLECTIONS			fd			
28	CHILDRENS COLLECTIONS			fe			
29	CHILDRENS COLLECTIONS			ff			
30	STORY TIME 129			fg			
31	STORY TIME 129			fh			
32	STORY TIME 129			fj			
33	STORY TIME 129			fk			
34	PUPPET AREA			fm			
35	PUPPET AREA			fn			
36	PUPPET AREA			fp			
37	STORAGE 131			fq			
38	FAMILY TOILET 128			fr			
39	FAMILY TOILET 127			fs			
40	STORAGE 130			ft			
41	OFFICE 125			fu			
42	OFFICE 125			fv			
43	COPY 114			fw			
44	COPY 114			fx			
45	CHILDRENS STAFF WORKROOM 128			fy			
46	CHILDRENS STAFF WORKROOM 128			fz			
47	SPARE						
48	SPARE						

1. ALL ZONE, MASTER, TIME CLOCK AND PHOTOCELL INPUTS TO RELAYS SHALL BE "SOFT WIRED" VIA PROGRAMMABLE SYSTEM SWITCHES.

LOW VOLTAGE RELAY SCHEDULE - LCP2

RELAY No.	DESCRIPTION	LINE V. CIRCUIT	LOAD VA	SWITCHING LOCAL SWITCH No.	MASTER SWITCH No.	TIME CLOCK EXTERIOR SCHEDULE	PHOTOCELL OVERRIDE
1	MEDIA BROWSING 115	HC–29		ca			
2	MEDIA BROWSING 115	HC–29		cb			
3	MEDIA BROWSING 115	HC–33		cc			
4	MEDIA BROWSING 115	HC–33		cd			
5	MEDIA BROWSING 115	HC–35		ce			
6	MEDIA BROWSING 115	HC–35		cf			
7	MEDIA BROWSING 115	HC–35		cg			
8	MEDIA BROWSING 115A	HC–31		ch			
9	MEDIA BROWSING 115A	HC–31		cj			
10	MEDIA BROWSING 115A	HC–31		ck			
11	MEDIA BROWSING 115A	HC–31		cm			
12	MEDIA BROWSING 115B	HC–31		cn			
13	MEDIA BROWSING 115B	HC–31		cp			
14	MEDIA BROWSING 115B	HC–31		cq			
15	MEDIA BROWSING 115B	HC–31		cr			
16	STAFF LOUNGE 146	HC–4		cs			
17	STAFF LOUNGE 146	HC–4		ct			
18	STAFF LOUNGE 146	HC–4		cu			
19	STAFF ENTRY 143	HC–4		cv			
20	STAFF TOILET 144	HC–4		cw			
21	STAFF TOILET 145	HC–4		cx			
22	COMPUTER STOR 142	HC–4		cy			
23	STAFF COPY 141	HC–4		cz			
24	SUPPLY STOR 138	HC–4		da			
25	RECEIVING 137	HC–4		db			
26	FRIENDS SORTING 139	HC–4		dc			
27	FRIENDS SORTING 139	HC–4		dd			
28	SORTING 132	HC–6		de			
29	SORTING 132	HC–6		df			
30	CIRCULATION STAFF WORKROOM 133	HC–6		dg			
31	CIRCULATION STAFF WORKROOM 133	HC–6		dh			
32	CONFERENCE 136	HC–8		dj			
33	CONFERENCE 136	HC–8		dk			
34	OFFICE 135	HC–8		dm			
35	OFFICE 135	HC–8		dn			
36	OFFICE 134	HC–8		dp			
37	OFFICE 134	HC–8		dq			
38	SPARE			dr			
39	SPARE			ds			
40	SPARE			dt			
41	SPARE			du			
42	SPARE			dv			
43	SPARE			dw			
44	SPARE			dx			
45	EXTERIOR BLDG LIGHTS			dy			
46	EXTERIOR BLDG LIGHTS			dz			
47	SPARE						
48	SPARE						

1. ALL ZONE, MASTER, TIME CLOCK AND PHOTOCELL INPUTS TO RELAYS SHALL BE "SOFT WIRED" VIA PROGRAMMABLE SYSTEM SWITCHES.

LOW VOLTAGE RELAY SCHEDULE - LCP1

RELAY No.	DESCRIPTION	LINE V. CIRCUIT	LOAD VA	SWITCHING LOCAL SWITCH No.	MASTER SWITCH No.	TIME CLOCK EXTERIOR SCHEDULE	PHOTOCELL OVERRIDE
1	ADULT COLLECTIONS – EAST			aa			
2	ADULT COLLECTIONS – EAST			ab			
3	ADULT COLLECTIONS – EAST			ac			
4	ADULT COLLECTIONS – EAST			ad			
5	ADULT COLLECTIONS – EAST			ae			
6	ADULT COLLECTIONS – EAST			af			
7	ADULT COLLECTIONS – EAST			ag			
8	ADULT COLLECTIONS – WEST			ah			
9	ADULT COLLECTIONS – WEST			aj			
10	ADULT COLLECTIONS – WEST			ak			
11	ADULT COLLECTIONS – WEST			am			
12	ADULT COLLECTIONS – WEST			an			
13	ADULT COLLECTIONS – WEST			ap			
14	ADULT COLLECTIONS – WEST			aq			
15	ADULT COLLECTIONS – WEST			ar			
16	ADULT COLLECTIONS – WEST			as			
17	ADULT COLLECTIONS – WEST			at			
18	ADULT COLLECTIONS – WEST			au			
19	ADULT COLLECTIONS – WEST			av			
20	ADULT COLLECTIONS – WEST			aw			
21	ADULT COLLECTIONS – WEST			ax			
22	ADULT COLLECTIONS – WEST			ay			
23	ADULT STAFF WORKROOM 147 – DAYLIGHT	HC–2		az			
24	READING ROOM 123	HC–7		ba			
25	READING ROOM 123	HC–7		bb			
26	READING ROOM 123	HC–11		bc			
27	CLOSET 121	HC–11		bd			
28	CLOSET 122	HC–11		be			
29	TEL REFERENCE 119	HC–27		bf			
30	TELECOM 120	HC–27		bg			
31	GROUP STUDY 118	HC–27		bh			
32	GROUP STUDY 118	HC–27		bj			
33	GROUP STUDY 118	HC–27		bk			
34	INFORMATION DESK AREA	HC–29		bm			
35	INFORMATION DESK AREA	HC–29		bn			
36	INFORMATION DESK AREA	HC–29		bp			
37	INFORMATION DESK AREA	HC–29		bq			
38	ADULT STAFF WORKROOM 147	HC–2		br			
39	ADULT STAFF WORKROOM 147	HC–2		bs			
40	HALL 140	HC–2		bt			
41	OFFICE 148	HC–2		bu			
42	OFFICE 148	HC–2		bv			
43	TRAINING ROOM 116	HC–2		bw			
44	TRAINING ROOM 116	HC–2		bx			
45	TRAINING ROOM 116	HC–2		by			
46	TRAINING ROOM 116	HC–2		bz			
47	SPARE						
48	SPARE						

1. ALL ZONE, MASTER, TIME CLOCK AND PHOTOCELL INPUTS TO RELAYS SHALL BE "SOFT WIRED" VIA PROGRAMMABLE SYSTEM SWITCHES.

LOW VOLTAGE RELAY SCHEDULE - LCP5

RELAY No.	DESCRIPTION	LINE V. CIRCUIT	LOAD VA	SWITCHING LOCAL SWITCH No.	MASTER SWITCH No.	TIME CLOCK EXTERIOR SCHEDULE	PHOTOCELL OVERRIDE
1	SPARE			ha			
2	SPARE			hb			
3	SPARE			hc			
4	SPARE			hd			
5	SPARE			he			
6	SPARE			hf			
7	SPARE			hg			
8	EXTERIOR BUILDING (1)	HD-18		hh			
9	TRASH ENCLOSURE	HC-26		hj			
10	SIGNAGE	HC-16		hk			
11	GROUND UPLIGHTS	HC-20		hm			
12	GROUND UPLIGHTS	HC-14		hn			
13	METAL HALIDE BOLLARD	HC-28		hp			
14	METAL HALIDE BOLLARD	HC-30		hq			
15	WALKWAY	HC-22		hr			
16	WALKWAY	HC-24		hs			
17	WALKWAY	HC-26		ht			
18	WALKWAY POST-TOP	HC-13		hu			
19	WALKWAY	HC-7		hv			
20	WALKWAY	HC-9		hw			
21	PARKING	HC-10		hx			
22	PARKING	HC-11		hy			
23	PARKING	HC-12		hz			
24-48	SPARE						

1. ALL ZONE, MASTER, TIME CLOCK AND PHOTOCELL INPUTS TO RELAYS SHALL BE "SOFT WIRED" VIA PROGRAMMABLE SYSTEM SWITCHES.
2. PROVIDE 48 RELAY PANEL TO MATCH OTHERS.

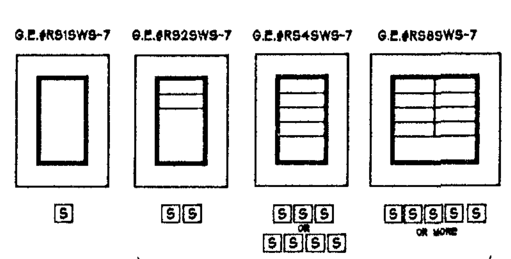

NOTES:

1. ENGRAVE EACH PUSHBUTTON WITH DESCRIPTIVE LABEL. FILL ENGRAVINGS WITH BLACK ENAMEL PAINT.
2. ENGRAVE EACH MASTER ROOM SWITCH AS DIRECTED.
3. SEE SPEC'S.
4. SEE PLANS.
5. SEE SYMBOL LIST.

TYPICAL WALL SWITCH CONFIGURATIONS (4/E6.3)

SCALE: NONE
FILE:

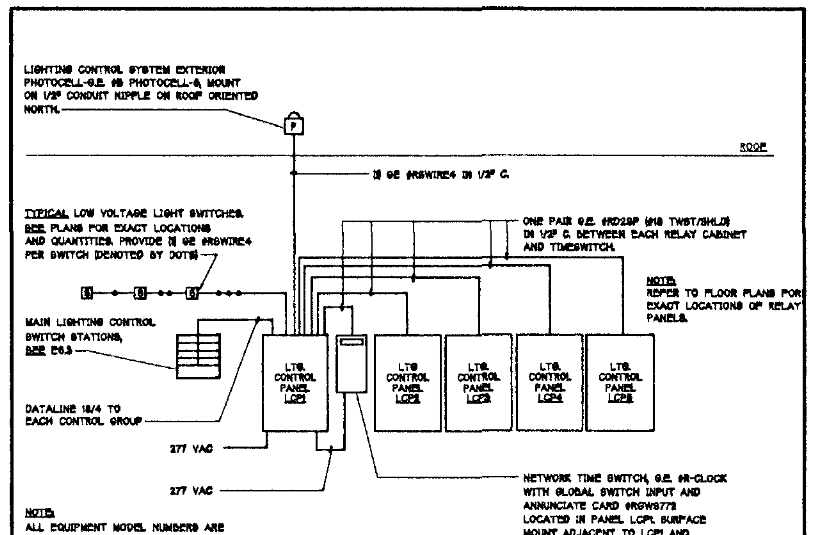

LOW VOLTAGE LIGHTING CONTROL CONNECTION DIAGRAM (1/E6.3)

SCALE: NONE
FILE: U:\W...\LTGCNTL

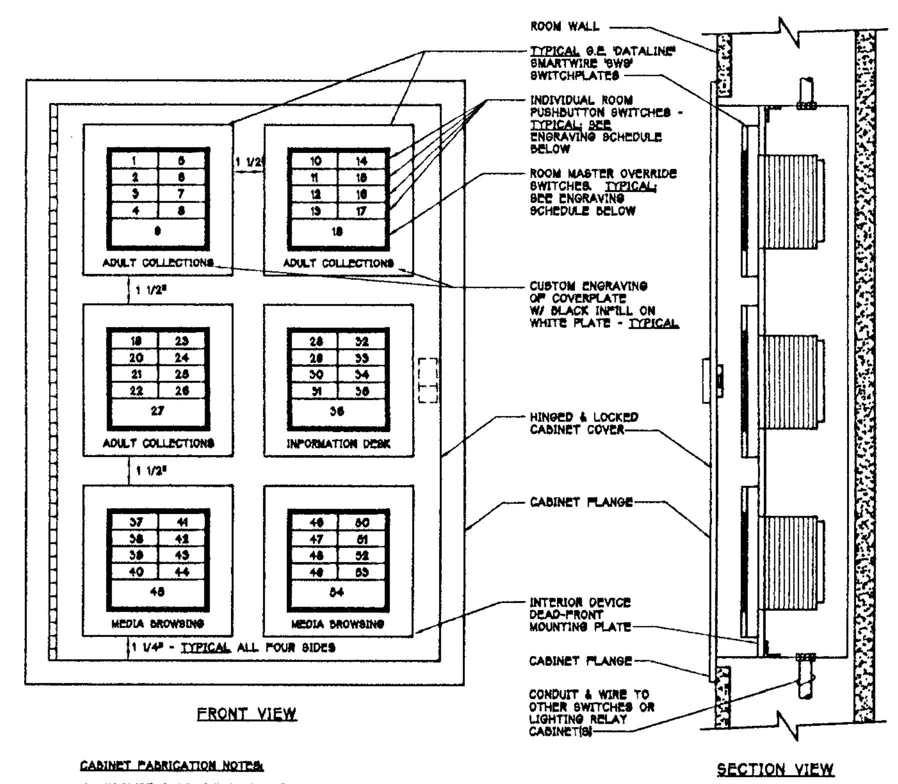

CABINET FABRICATION NOTES:

1. PROVIDE CUSTOM FABRICATED, FLUSH MOUNTED NEMA 1 ENCLOSURE W/ HINGED & LATCHED FRONT COVER, KEYED TO MATCH OTHER LIGHTING CONTROL CABINETS, AND WITH INTERIOR, DEAD FRONT DEVICE MOUNTING PLATE.
2. SEE LIST BELOW FOR INDIVIDUAL SWITCH ENGRAVING SCHEDULE.
3. CABINET TO BE FABRICATED FROM MIN. 18 GA. STAINLESS STEEL, FINISH AS DIRECTED BY THE ARCHITECT.

ENGRAVING SCHEDULE - ADULT COLLECTIONS

DESIG.	LABEL	SWITCH	DESIG.	LABEL	SWITCH
1	PERIMETER WALLWASH DNLTS.	aa	5	DECORATIVE PENDANTS	ae
2	DECORATIVE SCONCES	ab	6	DECORATIVE PENDANTS	af
3	LINEAR PENDANTS	ac	7	DECORATIVE PENDANTS	ag
4	LINEAR PENDANTS	ad	8	DECORATIVE PENDANTS	as
9	ADULT COLLECTIONS - EAST				aa, ab, ac, ad, ae, af, ag, as

ENGRAVING SCHEDULE - ADULT COLLECTIONS

DESIG.	LABEL	SWITCH	DESIG.	LABEL	SWITCH
10	DECORATIVE PENDANTS	ah	14	DECORATIVE PENDANTS	an
11	DECORATIVE PENDANTS	aj	15	DECORATIVE PENDANTS	ap
12	LINEAR PENDANTS	ak	16	PERIMETER WALLWASH, DNLTS.	aq
13	LINEAR PENDANTS	am	17	DECORATIVE SCONCES	ar
18	ADULT COLLECTIONS CENTER				ah, aj, ak, am, an, ap

ENGRAVING SCHEDULE - ADULT COLLECTIONS

DESIG.	LABEL	SWITCH	DESIG.	LABEL	SWITCH
19	DECORATIVE PENDANTS	at	23	DECORATIVE PENDANTS	ax
20	DECORATIVE PENDANTS	au	24	DECORATIVE PENDANTS	ax
21	LINEAR PENDANTS	av	25	READING RM PENDANTS	ba, bb
22	LINEAR PENDANTS	aw	26	READIND RM WALLWASH	bc
27	ADULT COLLECTIONS - WEST				at, au, av, aw, ax, ay

ENGRAVING SCHEDULE- INFOR. DESK, GROUP STUDY

DESIG.	LABEL	SWITCH	DESIG.	LABEL	SWITCH
28	DECORATIVE PENDANT	bm	32	GROUP STUDY PENDANTS	bh
29	DECORATIVE PENDANT	bn	33	GROUP STUDY PENDANTS	bj
30	DOWNLIGHTS	bp	34	GROUP STUDY WALLWASH	bk
31	WALLWASHERS	bq	35	SPARE	
36	INFORMATION DESK				bm, bn, bp, bq

ENGRAVING SCHEDULE - MEDIA BROWSING

DESIG.	LABEL	SWITCH	DESIG.	LABEL	SWITCH
37	LINEAR PENDANTS	ca	41	DECORATIVE PENDANTS	ce
38	LINEAR PENDANTS	cb	42	LINEAR WALL	cf
39	LINEAR PENDANTS	cc	43	DECORATIVE PENDANTS	cg
40	LINEAR PENDANTS	cd	44		
45	MEDIA BROWSING - MAIN AREA				ca, cb, cc, cd, ce, cf, cg

ENGRAVING SCHEDULE - MEDIA BROWSING

DESIG.	LABEL	SWITCH	DESIG.	LABEL	SWITCH
46	LINEAR PENDANTS	ch	50	LINEAR PENDANTS	cn
47	LINEAR PENDANTS	cj	51	LINEAR PENDANTS	cp
48	DECORATIVE PENDANTS	ck	52	LINEAR WALLWASH	cq
49	LINEAR WALLWASH	cm	53	DOWNLIGHTS	cr
54	MEDIA BROWSING - SECONDARY				ch, cj, ck, cm, cn, cp, cq, cr

NOTE: ALL G.E. 'SWS' DATALINE PUSHBUTTON SWITCHES ARE TO BE CUSTOM ENGRAVED - BLACK INFILL ON WHITE PUSHBUTTONS - AS NOTED IN SCHEDULES ABOVE OR AS DIRECTED/ APPROVED BY THE ARCHITECT.

MASTER LIGHTING CONTROL STATION - ADULT COLLECTIONS, INFORMATION DESK, MEDIA BROWSING (2/E6.3)

SCALE: NONE
FILE:

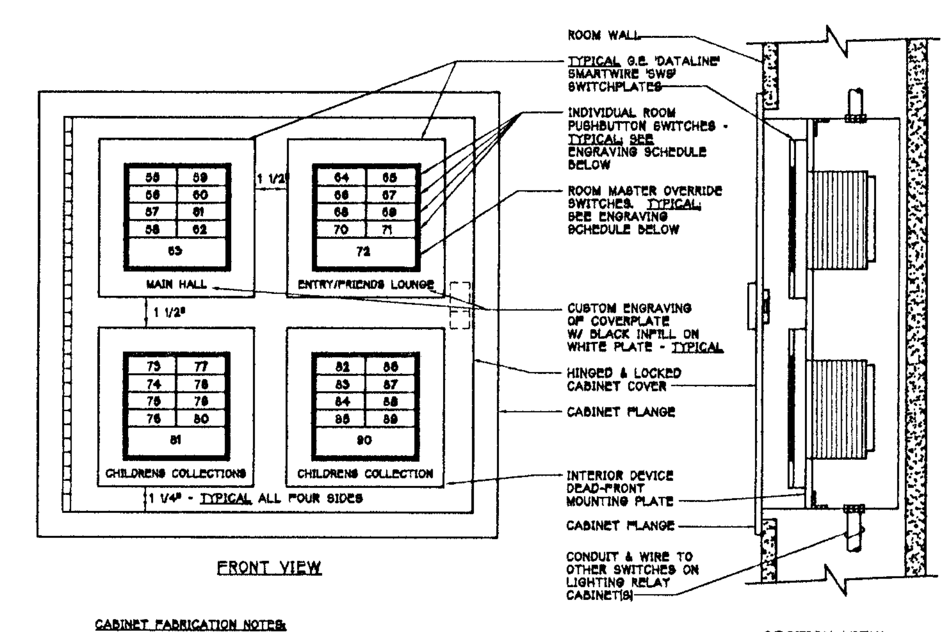

CABINET FABRICATION NOTES:

1. PROVIDE CUSTOM FABRICATED, FLUSH MOUNTED NEMA 1 ENCLOSURE W/ HINGED & LATCHED FRONT COVER, KEYED TO MATCH OTHER LIGHTING CONTROL CABINETS, AND WITH INTERIOR, DEAD FRONT DEVICE MOUNTING PLATE.
2. SEE LIST BELOW FOR INDIVIDUAL SWITCH ENGRAVING SCHEDULE.
3. CABINET TO BE FABRICATED FROM MIN. 18 GA. STAINLESS STEEL, FINISH AS DIRECTED BY THE ARCHITECT.

ENGRAVING SCHEDULE - MAIN HALL

DESIG.	LABEL	SWITCH	DESIG.	LABEL	SWITCH
55	METAL HALIDE PENDANT	ed	59	DOWNLIGHTS	ej
56	LINEAR WALL FLUORESCENT	ef	60	WALLWASHERS	ek
57	LINEAR WALLWASHER	eg	61	WALLWASHERS	em
58	TABLE FLUORESCENT	eh	62	SPARE	
63	MAIN HALL				ed, ef, eg, eh, ej, ek, em

ENGRAVING SCHEDULE - ENTRY/FRIENDS LOUNGE

DESIG.	LABEL	SWITCH	DESIG.	LABEL	SWITCH
64	METAL HALIDE PENDANTS	ea	68	METAL HALIDE PENDANT	en
65	LINEAR WALL	eb	69	LINEAR WALL	ep
66	LINEAR WALLWASHERS	ec	70	LINEAR WALLWASHERS	eq
67			71		
72	ENTRY/FRIENDS LOUNGE				ea, eb, ec, en, ep, eq

ENGRAVING SCHEDULE - CHILDRENS COLLECTION

DESIG.	LABEL	SWITCH	DESIG.	LABEL	SWITCH
73	LINEAR PENDANTS	er	77	LINEAR WALL	ev
74	LINEAR PENDANTS	es	78	DECORATIVE PENDANT	ew
75	PERIMETER WALLWASH	et	79	DOWNLIGHT	ex
76	WALLWASHERS	eu	80	DOWNLIGHT	ex
81	CHILDREN COLLECTIONS				er, es, et, eu, ev, ew, ex, ey

ENGRAVING SCHEDULE - "MLC"

DESIG.	LABEL	SWITCH	DESIG.	LABEL	SWITCH
82	PARABOLICS	ez,	86	LINEAR WALLWASHERS	fb
83	PARABOLICS	fa	87	LINEAR WALLWASHERS	fe
84	PARABOLICS	fc	88	DECORATIVE SCONCES	ff
85	PARABOLICS	fd	89	STORY TIME	fg, fh, fj, fk
90	MAIN HALL				ez, fa, fb, fc, fd, fe, ff

NOTE: ALL G.E. 'SWS' DATALINE PUSHBUTTON SWITCHES ARE TO BE CUSTOM ENGRAVED - BLACK INFILL ON WHITE PUSHBUTTONS - AS NOTED IN SCHEDULES ABOVE OR AS DIRECTED/ APPROVED BY THE ARCHITECT.

MASTER LIGHTING CONTROL STATION - MAIN HALL, ENTRY, CHILDRENS COLLECTIONS (3/E6.3)

SCALE: NONE
FILE:

FIELD PAOLI
Architecture
1045 Sansome St.
Suite 206
San Francisco
California, 94111
Tel. 415. 788. 6606
Fax 415. 788. 6650

SARATOGA COMMUNITY LIBRARY

SANTA CLARA COUNTY LIBRARY

13650 Saratoga Avenue
Saratoga, California 95070

O'MAHONY & MYER
ELECTRICAL and LIGHTING DESIGN
4340 REDWOOD HWY, SUITE 245
SAN RAFAEL, CALIFORNIA 94903
(415) 492-0420/FAX (415) 479-9662
www.ommconsulting.com

DATE: JANUARY 25, 2002

REVISIONS
CONFORM SET RE-PLOT

1	ADDENDUM #1	11/20/01
2	ADDENDUM #2	12/03/01
3	ADDENDUM #3	12/04/01
4	ADDENDUM #4	12/27/01

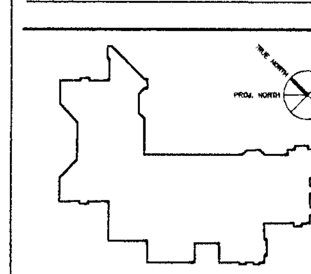

LIGHTING CONTROL SCHEDULES & DIAGRAMS

SCALE	NONE
DRAWN BY	OO/RS
CHECKED BY	NT/PC
JOB NO.	200095

PHASE - 2

SHEET NO. **E6.3**

All drawings and written material appearing herein constitute the original and unpublished work of the architect and the same may not be duplicated, used, or disclosed without the written consent of the architect ©Field Paoli

SARATOGA LIBRARY 200095
(USING ARIAL.SHX FOR MISSING AlbertusExtraBold FONT)
FILE: P:\2000\SARATOGA_LIBRARY-200095\CAD\E_63-SLib.dwg DWG 11/20/01 at 07:09

SARATOGA_LIBRARY_200095

(USING ARIAL.SHX FOR MISSING AlbertusExtraBold FONT)

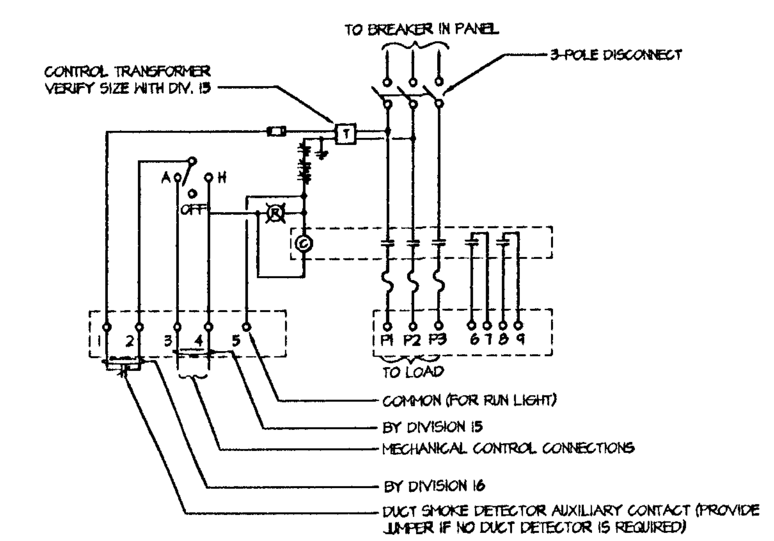

MOTOR STARTER / CONTROL DIAGRAM - 3ø EQUIPMENT (13/E7.1)
SCALE: NONE
FILE: L:\POWER\STARTERS\PSTAR002 (MOD)

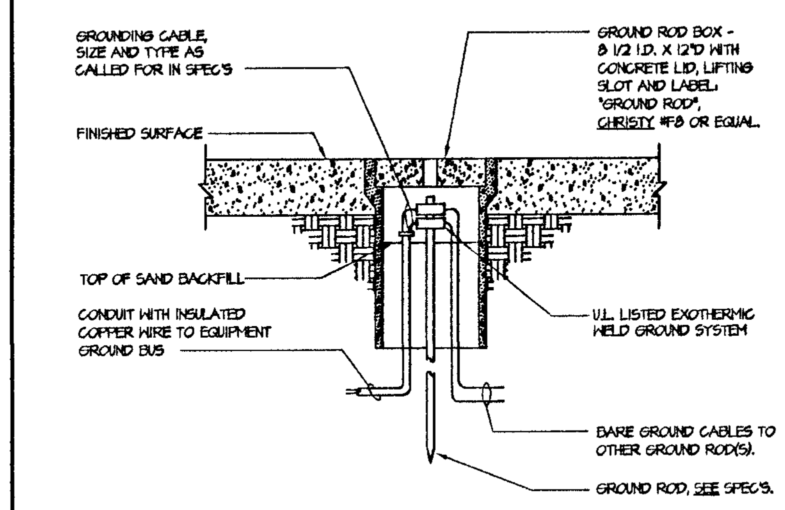

GROUND ROD INSTALLATION (9/E7.1)
SCALE: NONE
FILE: L:\POWER\GROUND\PGROU001

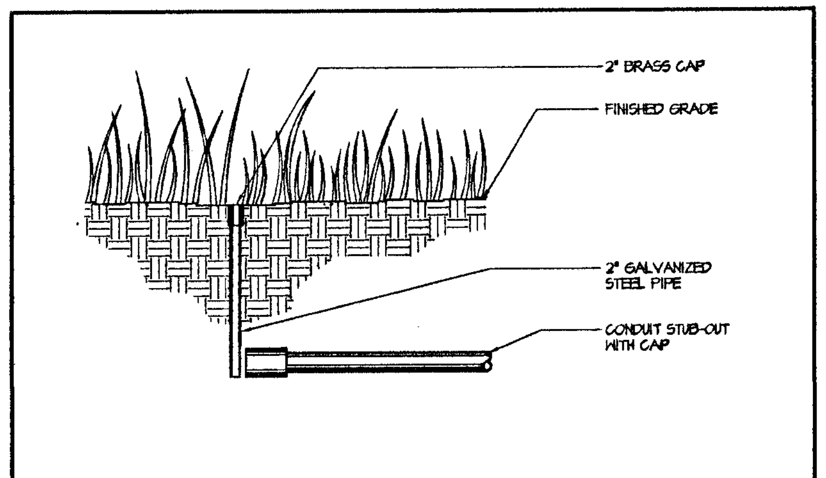

NOTES: 1. RECORD ALL ACTUAL STUB-OUT LOCATIONS ON AS-BUILT DRAWINGS

CONDUIT STUB-OUT (5/E7.1)
SCALE: NONE
FILE: L:\POWER\CONDUIT\PCOND005

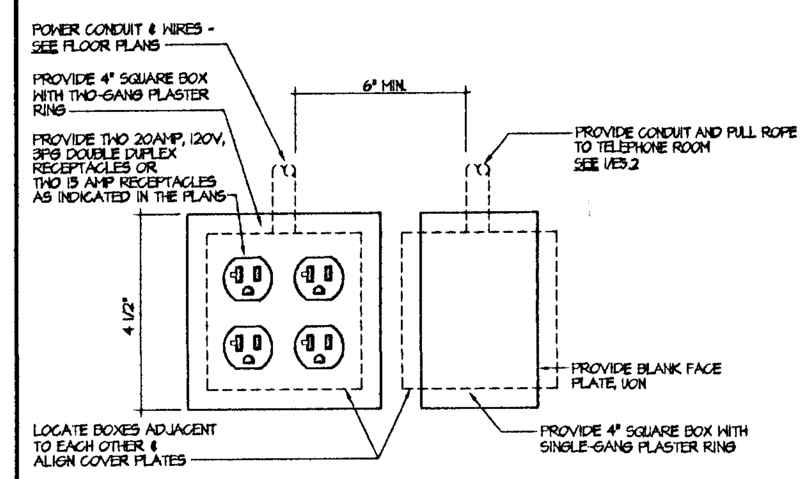

TYPICAL POWER & TELE / DATA OUTLET ELEVATION (1/E7.1)
SCALE: NONE
FILE: L:\POWER\PDWIRE\PPDWI002 (MOD)

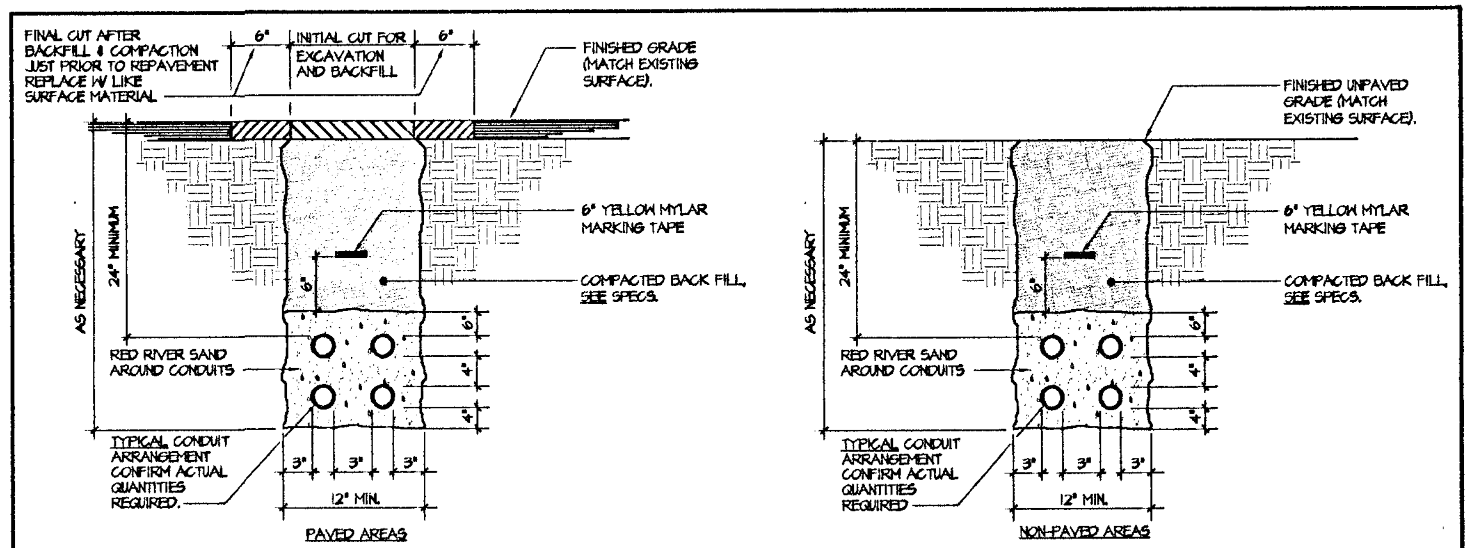

TYPICAL TRENCH SECTIONS (10/E7.1)
SCALE: NONE
FILE: L:\POWER\TRENCH\PTREN005 (MOD)

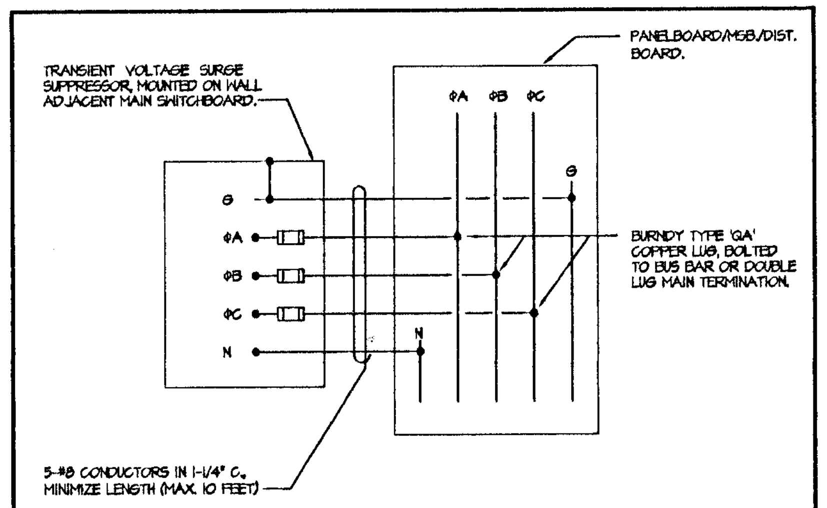

SURGE SUPPRESSOR CONNECTION DIAGRAM AT 'MSB' (6/E7.1)
SCALE: NONE
FILE: L:\POWER\SURGE\PSURG001 (MOD)

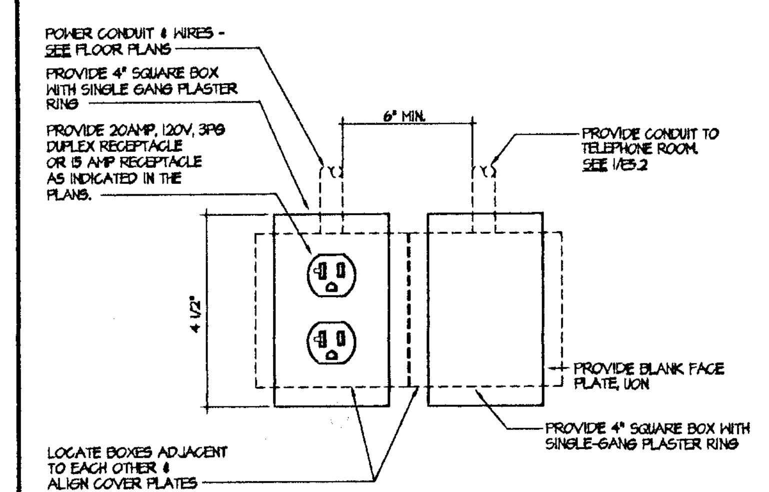

TYPICAL POWER TELE / DATA OUTLET ELEVATION (2/E7.1)
SCALE: NONE
FILE: L:\POWER\PDWIRE\PPDWI001 (MOD)

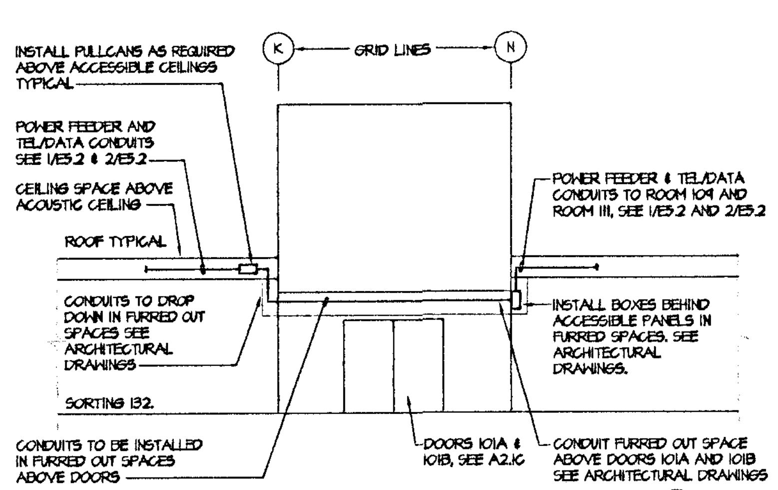

CONDUIT ROUTING AT ENTRY FOYER 101 & LOBBY 112 (14/E7.1)
SCALE: NONE

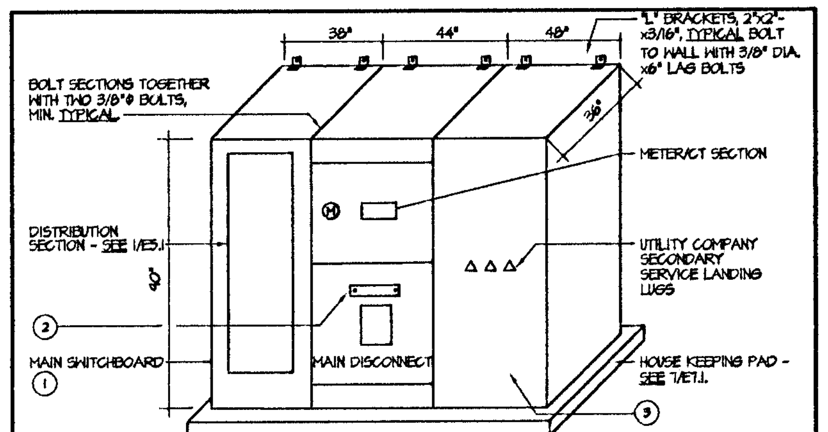

NUMBERED DETAIL NOTES

1. SUBMIT SHOP DRAWING TO UTILITY COMPANY FOR REVIEW. SEE 1/E5.1 FOR REQUIREMENTS
2. PROVIDE AND INSTALL NAMEPLATE WITH NOMENCLATURE WHICH READS "BUILDING ELECTRICAL MAIN DISCONNECT".
3. MAIN SWITCHBOARD SHALL BE CONSTRUCTED TO ALLOW THE SECONDRY SERVICE CONDUITS INSTALLED IN PHASE 1 TO STUB-UP IN THE UTILITY COMPARTMENT.

MAIN SWITCHBOARD 'MSB' ELEVATION (11/E7.1)
SCALE: NONE

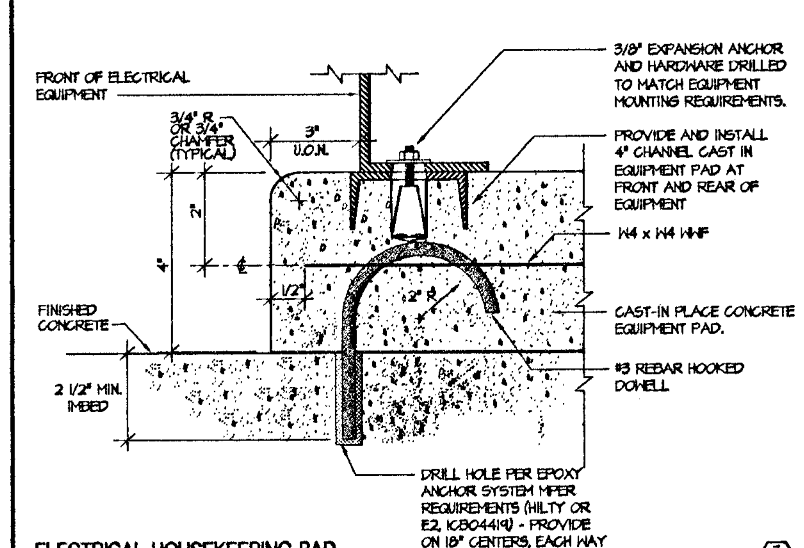

ELECTRICAL HOUSEKEEPING PAD (7/E7.1)
SCALE: NONE
FILE: L:\POWER\PADS\PPADS015

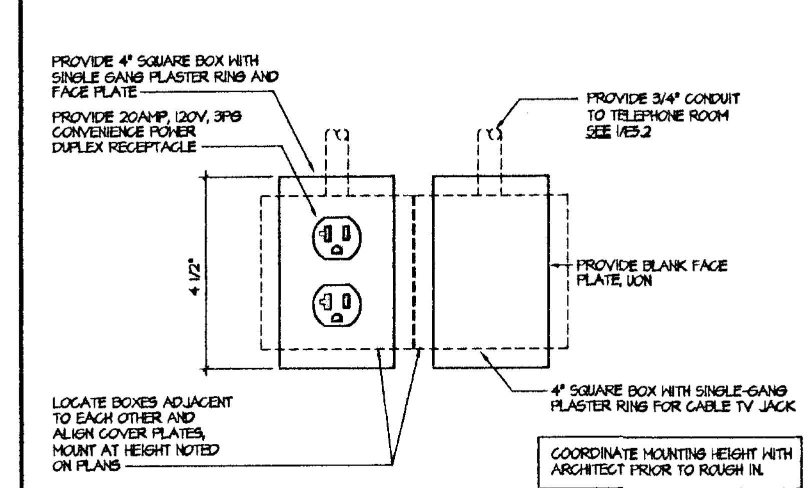

TYPICAL POWER AND CABLE TV OUTLET ELEVATION (3/E7.1)
SCALE: NONE
FILE: L:\POWER\PVIDEO\PPVIS001 (MOD)

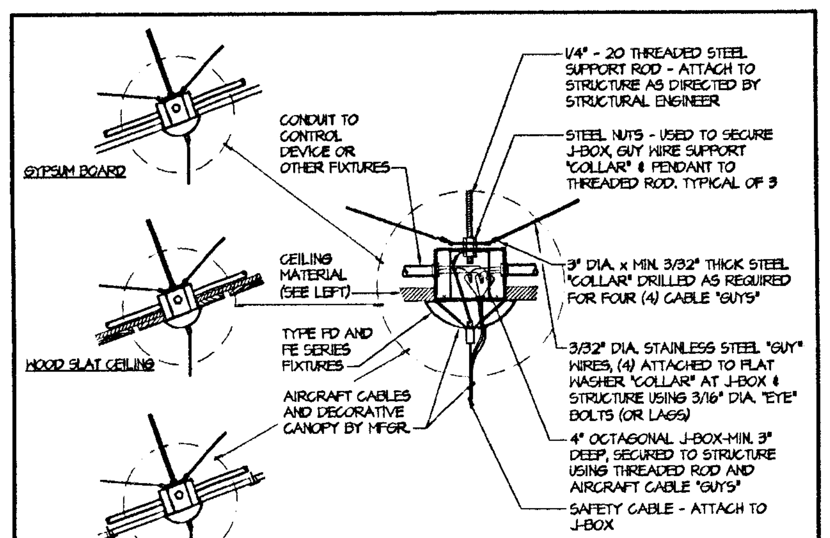

TYPE "FD" AND "FE" FIXTURE MOUNTING (15/E7.1)
SCALE: NONE
FILE: L:\LIGHT\PENDANT\LPEND0027

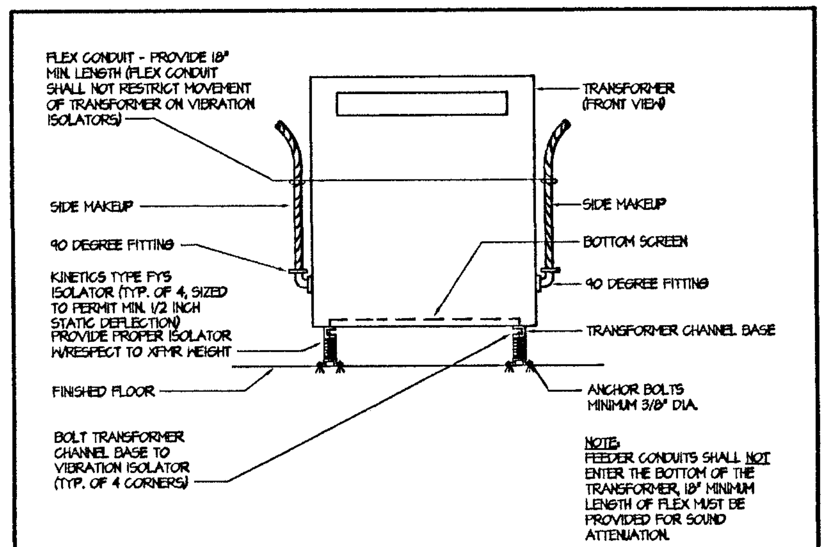

NOTE: FEEDER CONDUITS SHALL NOT ENTER THE BOTTOM OF THE TRANSFORMER, 18" MINIMUM LENGTH OF FLEX MUST BE PROVIDED FOR SOUND ATTENUATION.

FLOOR MOUNTED TRANSFORMER MOUNTING DETAIL (12/E7.1)
SCALE: NONE
FILE: L:\POWER\PADS\PPADS009

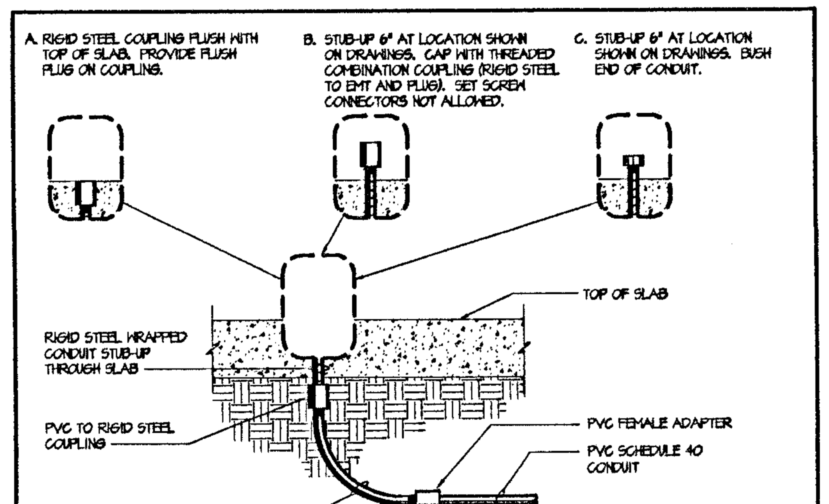

NOTE: PVC CONDUIT NOT PERMITTED TO STUB-UP ABOVE TOP OF SLAB

CONDUIT STUB-UP DETAILS (8/E7.1)
SCALE: NONE
FILE: L:\OPOWER\CONDUIT\PCOND007

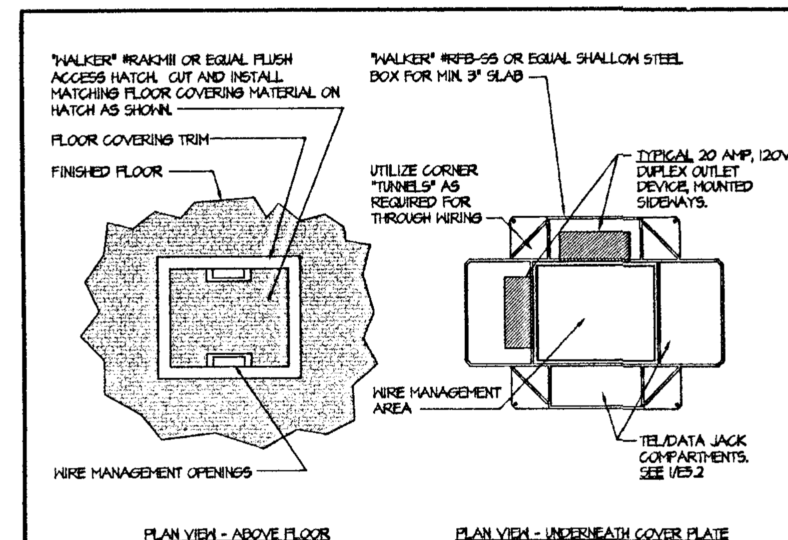

TYPICAL CONCEALED SERVICE FLOOR BOX IN SLAB (4/E7.1)
SCALE: NONE
FILE: L:\POWER\RECEPT\PRECE002

FILE: P:\2000\SARATOGA_LIBRARY-200095\CADE_T1-5\bdwg.DWG 11/02/01 at 14:36

FIELD PAOLI
Architecture
1045 Sansome St.
Suite 206
San Francisco
California, 94111
Tel. 415. 788. 6606
Fax 415. 788. 6650

SARATOGA COMMUNITY LIBRARY

SANTA CLARA COUNTY LIBRARY

13650 Saratoga Avenue
Saratoga, California 95070

O'MAHONY & MYER
ELECTRICAL and LIGHTING DESIGN
4340 REDWOOD HWY, SUITE 245
SAN RAFAEL, CALIFORNIA 94903
(415) 492-0420/FAX (415) 479-9662
www.ommconsulting.com

DATE: OCTOBER 26, 2001

REVISIONS: BID SET

DETAILS

SCALE	NONE
DRAWN BY	TV
CHECKED BY	NT/PC
JOB NO.	200095

PHASE - 2

SHEET NO. **E7.1**

All drawings and written material appearing herein constitute the original and unpublished work of the architect and the same may not be duplicated, used, or disclosed without the written consent of the architect ©Field Paoli

SARATOGA_LIBRARY_200095

(USING ARIAL.SHX FOR MISSING AlbertusExtraBold FONT)

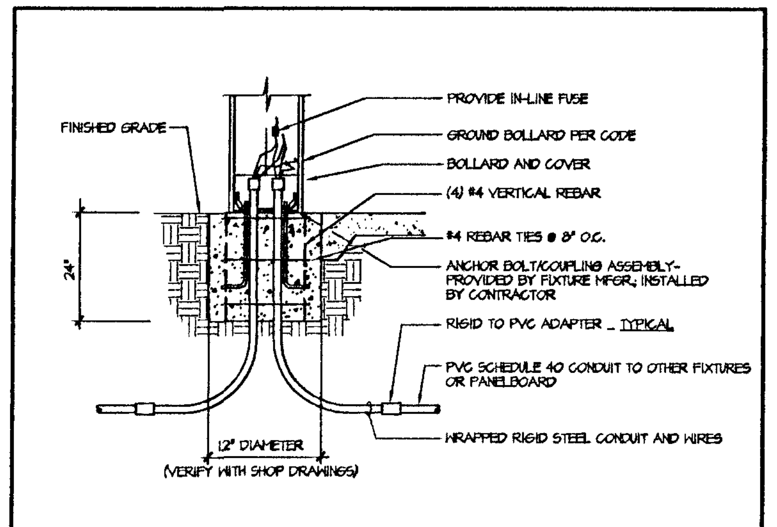

BOLLARD MOUNTING DETAIL ADJACENT TO WALKWAY (13/E7.2)
SCALE: NONE
FILE: L:\LIGHT\BOLLARD\LBOLL005

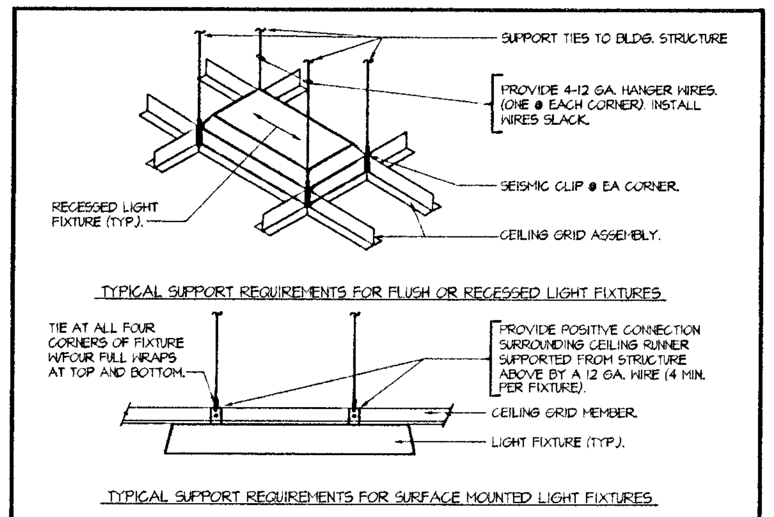

FIXTURE SUPPORT (9/E7.2)
SCALE: NONE
FILE: L:\LIGHT\RECESS\LRFCE002

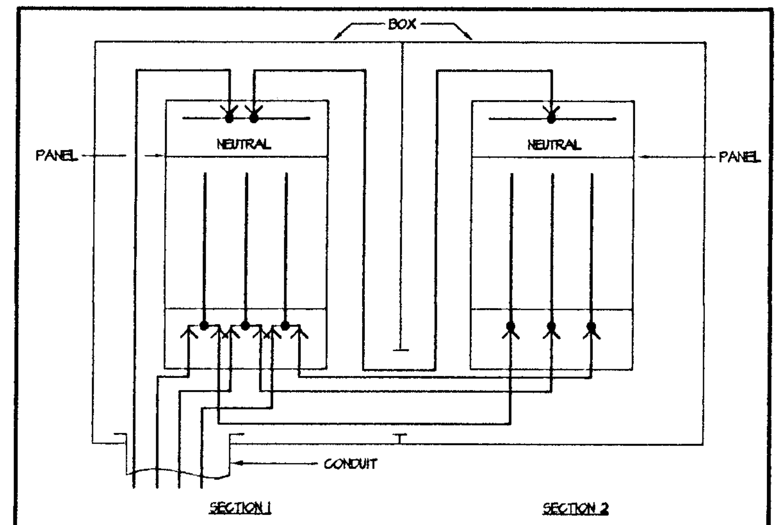

DOUBLE SECTION PANEL (5/E7.2)
SCALE: NOT TO SCALE
FILE: \OPWRDET\DBLPANEL

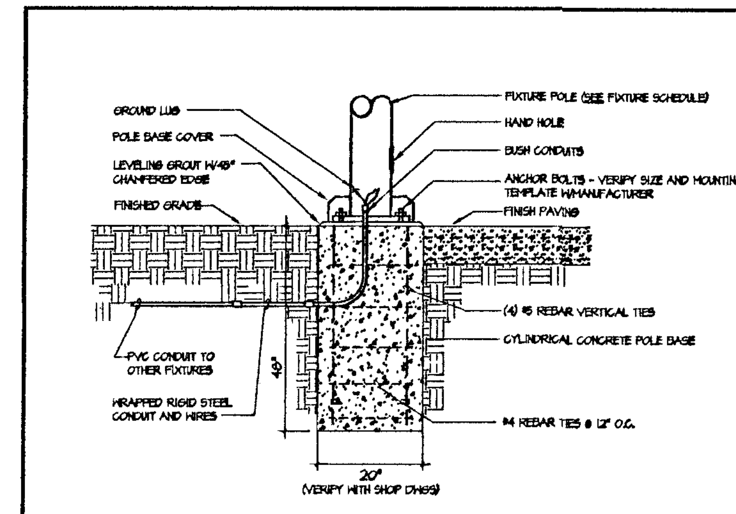

POLE BASE ADJACENT TO WALKWAY (1/E7.2)
SCALE: NONE
FILE: L:\LIGHT\POLEBASE\LPOLE003

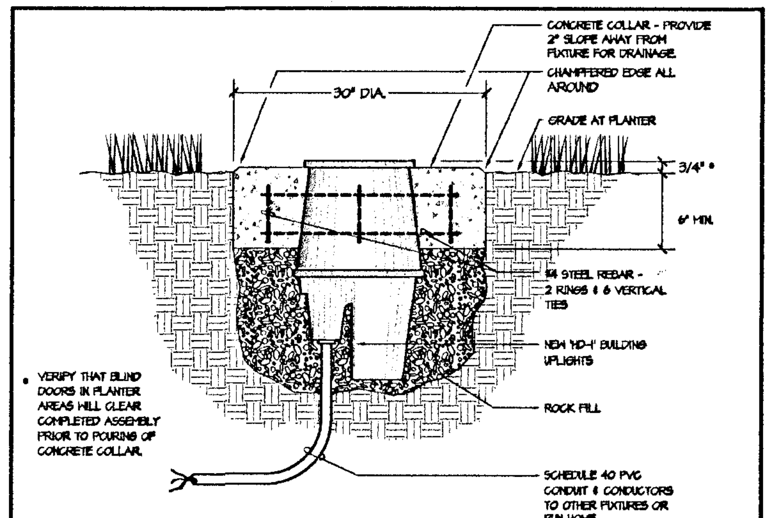

GROUND MOUNTED UPLIGHT AT PLANTER (14/E7.2)
SCALE: NOT TO SCALE
FILE: L:\LIGHT\GROUND\LGROU010

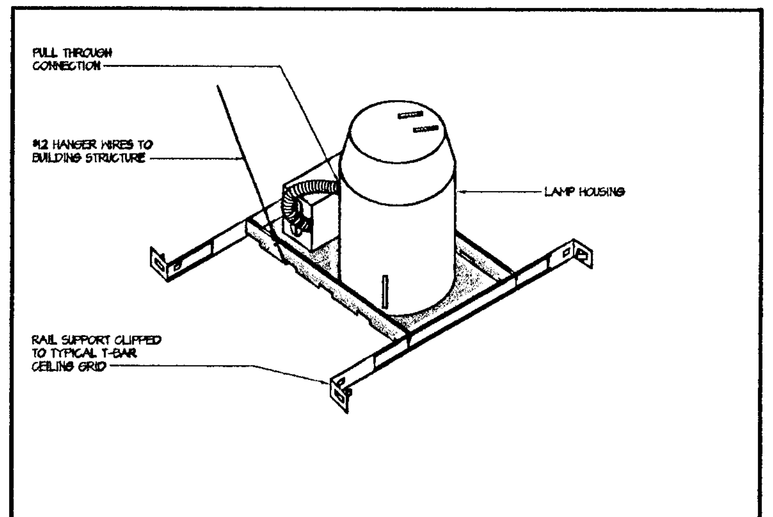

RECESSED CAN FIXTURE MOUNTING (10/E7.2)
SCALE: NONE
FILE: L:\LIGHT\LRECE005

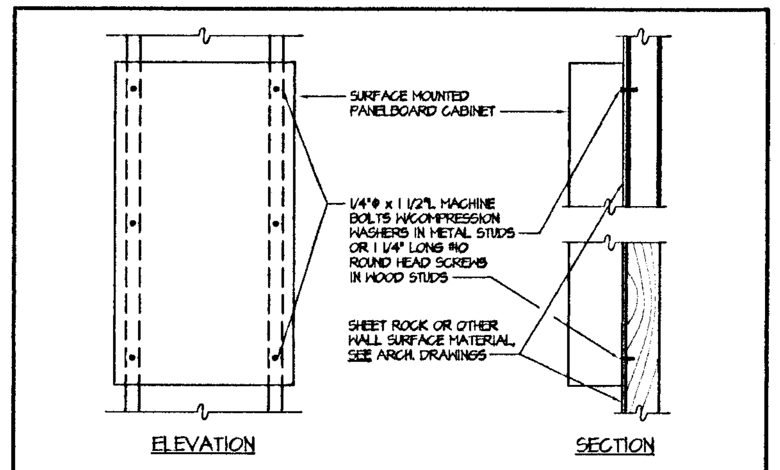

NOTES: MAXIMUM PANELBOARD WEIGHT: 150 POUNDS.

SURFACE PANELBOARD MOUNTING (6/E-7.2)
SCALE: NONE
FILE: N:\MONTHLY\OEQUPMTG\SUPNLMTG

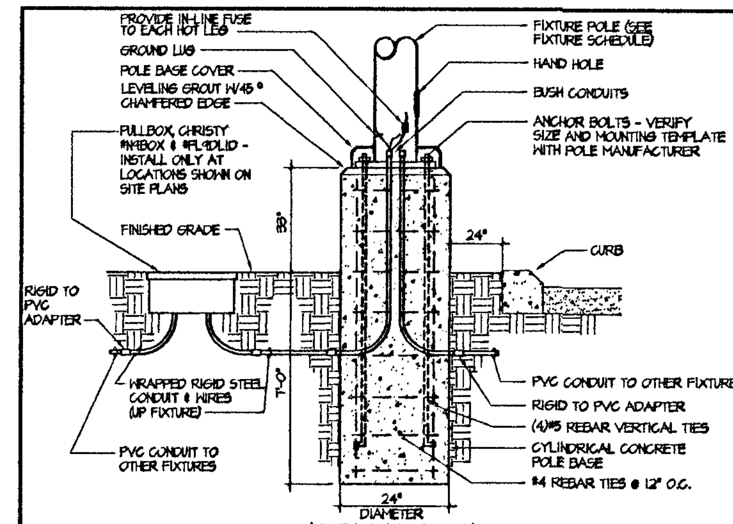

TYPICAL POLE BASE AT CURBS (2/E7.2)
SCALE: NONE
FILE: L:\LIGHT\POLEBASE\LPOLE002 (MOD.)

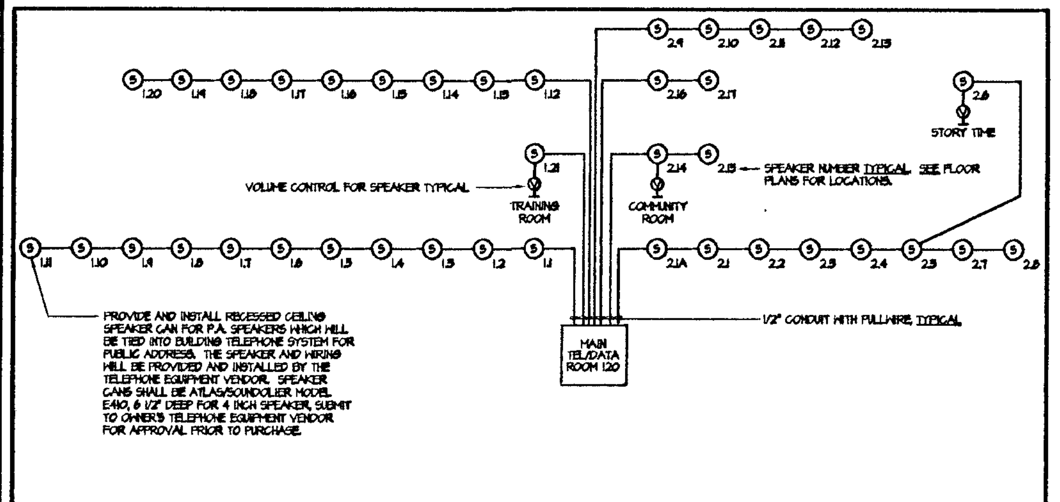

LIBRARY PUBLIC ADDRESS SINGLE LINE DIAGRAM (15/E7.2)
SCALE: NONE

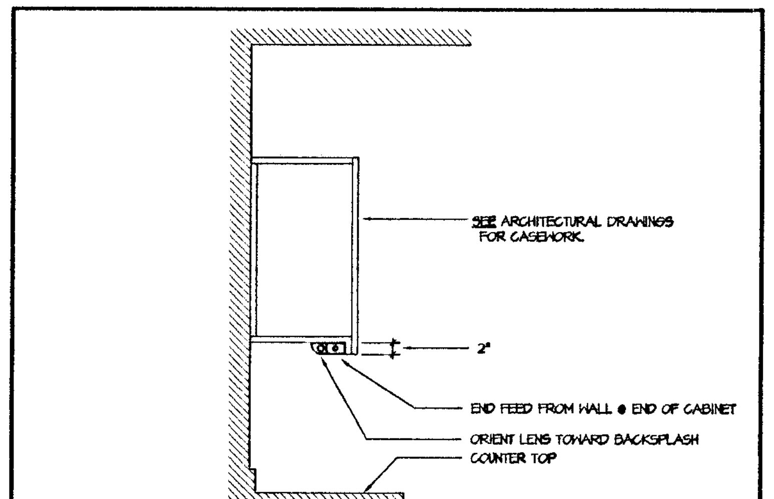

UNDER-CABINET FIXTURE MOUNTING (11/E7.2)
SCALE: NONE
FILE: L:\LIGHT\MISC\LMISC004

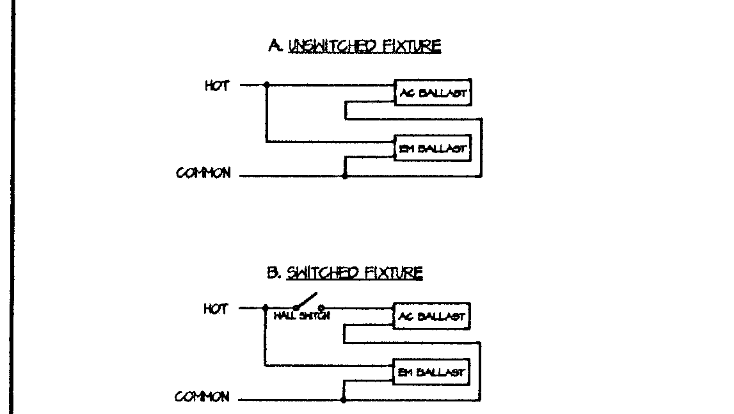

EMERGENCY BALLAST WIRING DIAGRAM (7/E7.2)
SCALE: NONE
FILE: L:\ODIAGRAM\EMBALAST

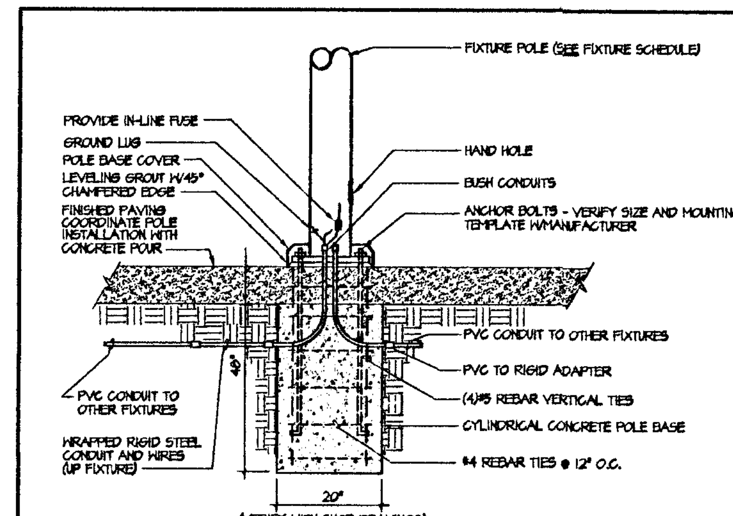

TYPICAL POLE BASE AT SIDEWALKS (3/E7.2)
SCALE: NONE
FILE: L:\LIGHT\POLEBASE\LPOLE015

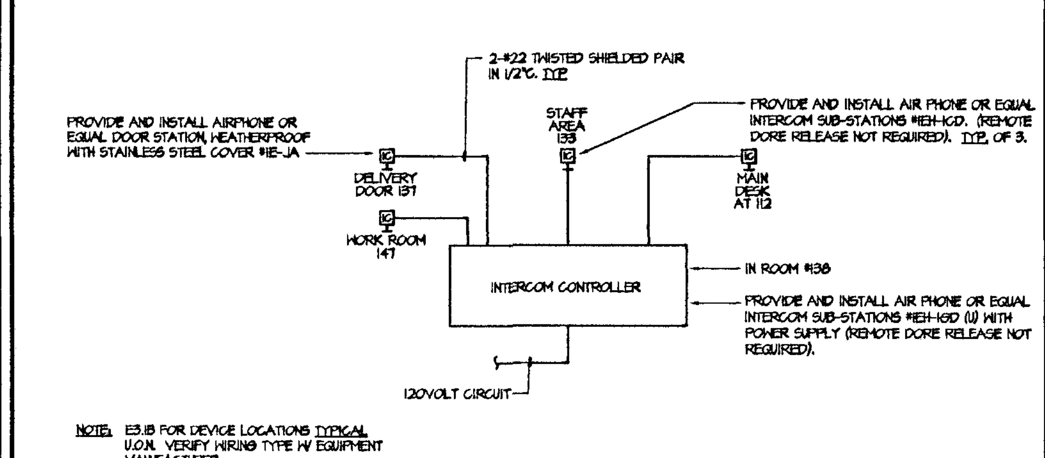

NOTE: E3.1B FOR DEVICE LOCATIONS TYPICAL U.O.N. VERIFY WIRING TYPE W/ EQUIPMENT MANUFACTURER.

DELIVERY DOOR INTERCOM SYSTEM SINGLE LINE DIAGRAM (16/E7.2)
SCALE: NONE

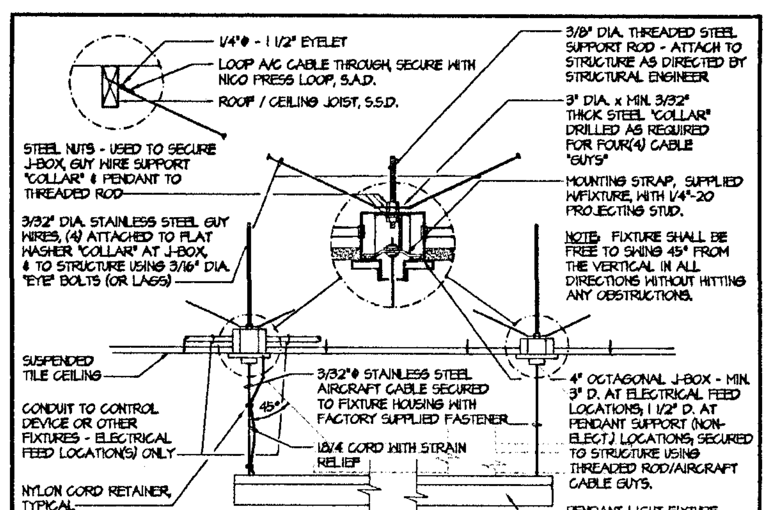

PENDANT FIXTURE MOUNTING - T-BAR/SUSPENDED CEILING (12/E7.2)
SCALE: NONE
FILE: L:\LIGHT\PENDANT\PENDO19

NOTE:
1. SEE FIXTURE SCHEDULE FOR DESCRIPTION OF EXIT SIGNS.

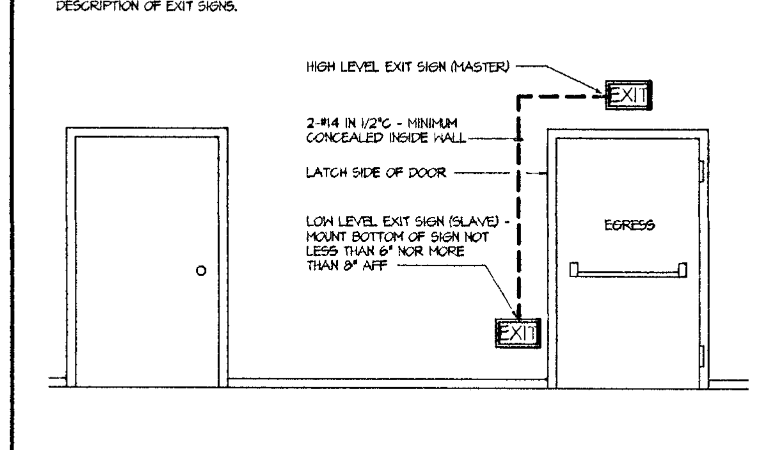

TYPICAL HIGH AND LOW EXIT SIGN DETAIL (8/E7.2)
SCALE: NONE
FILE: L:\LIGHT\LOWLEVEL\LLOW-004

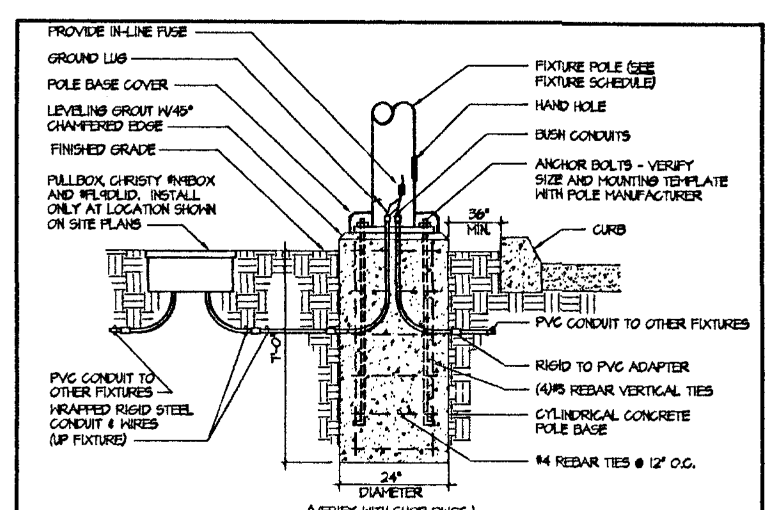

TYPICAL POLE BASE AWAY FROM PARKING (4/E7.2)
SCALE: NONE
FILE: L:\LIGHT\POLEBASE\LPOLE001 (MOD.)

FILE: P:\2000\SARATOGA_LIBRARY-200095\CADE_T2-5Lib.dwg DWG 11/20/01 at 04:41

FIELD PAOLI

Architecture
1045 Sansome St.
Suite 206
San Francisco
California, 94111
Tel. 415. 788. 6606
Fax 415. 788. 6650

SARATOGA COMMUNITY LIBRARY

SANTA CLARA COUNTY LIBRARY

13650 Saratoga Avenue
Saratoga, California 95070

O'MAHONY & MYER
ELECTRICAL and LIGHTING DESIGN
4340 REDWOOD HWY, SUITE 245
SAN RAFAEL, CALIFORNIA 94903
(415) 492-0420/FAX (415) 479-9662
www.ommconsulting.com

DATE		JANUARY 25, 2002
REVISIONS		
CONFORM SET RE-PLOT		
1	ADDENDUM #1	11/20/01
2	ADDENDUM #2	12/03/01
3	ADDENDUM #3	12/04/01
4	ADDENDUM #4	12/27/01

DETAILS

SCALE	NONE
DRAWN BY	TV/OO
CHECKED BY	NT/PC
JOB NO.	200095

PHASE - 2

SHEET NO. **E7.2**

All drawings and written material appearing herein constitute the original and unpublished work of the architect and the same may not be duplicated, used, or disclosed without the written consent of the architect ©Field Paoli

C:\DD CADD\FPA0001\G1.dwg, 10/24/2001 04:43:13 PM, HP DesignJet 500PS42_HPGL2 Card.pc3

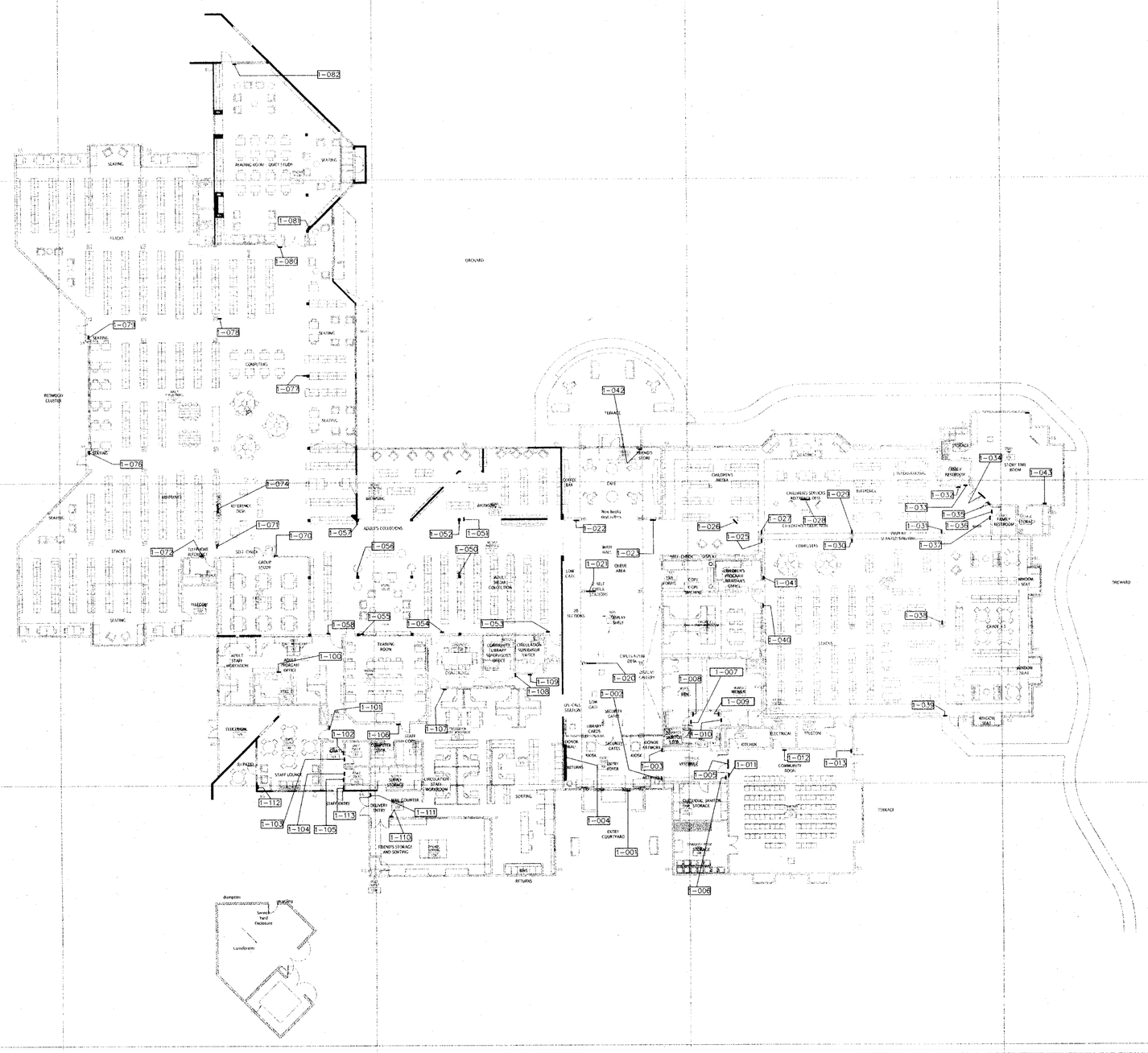

FIELD PAOLI

Architecture
1045 Sansome St.
Suite 206
San Francisco
California, 94111
Tel. 415. 788. 6606
Fax 415. 788. 6650

SARATOGA LIBRARY

13650 Saratoga Avenue
Saratoga, Califqrnia 95070

DONNELLY DESIGN
Environmental Graphic Design
167 Main Street
Rio Vista, CA 94571
707 374-2334
fax 374-2144

DATE OCTOBER 26, 2001

REVISIONS

CONSTRUCTION DOCUMENTS
BID SET

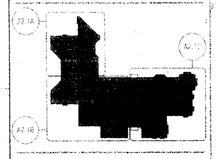

SCALE

DRAWN BY

CHECKED BY

JOB NO.

INTERIOR SIGN LOCATION PLAN

SHEET NO. **G1.0**

All drawings and written material appearing herein constitute the original and unpublished work of the architect and the same may not be duplicated, used, or disclosed without the written consent of the architect © Field Paoli

C:\DD CADD\FPA0001\G2.dwg, 10/24/2001 04:40:07 PM, HP Designjet 500PS42_MPGL2 Card.pc3

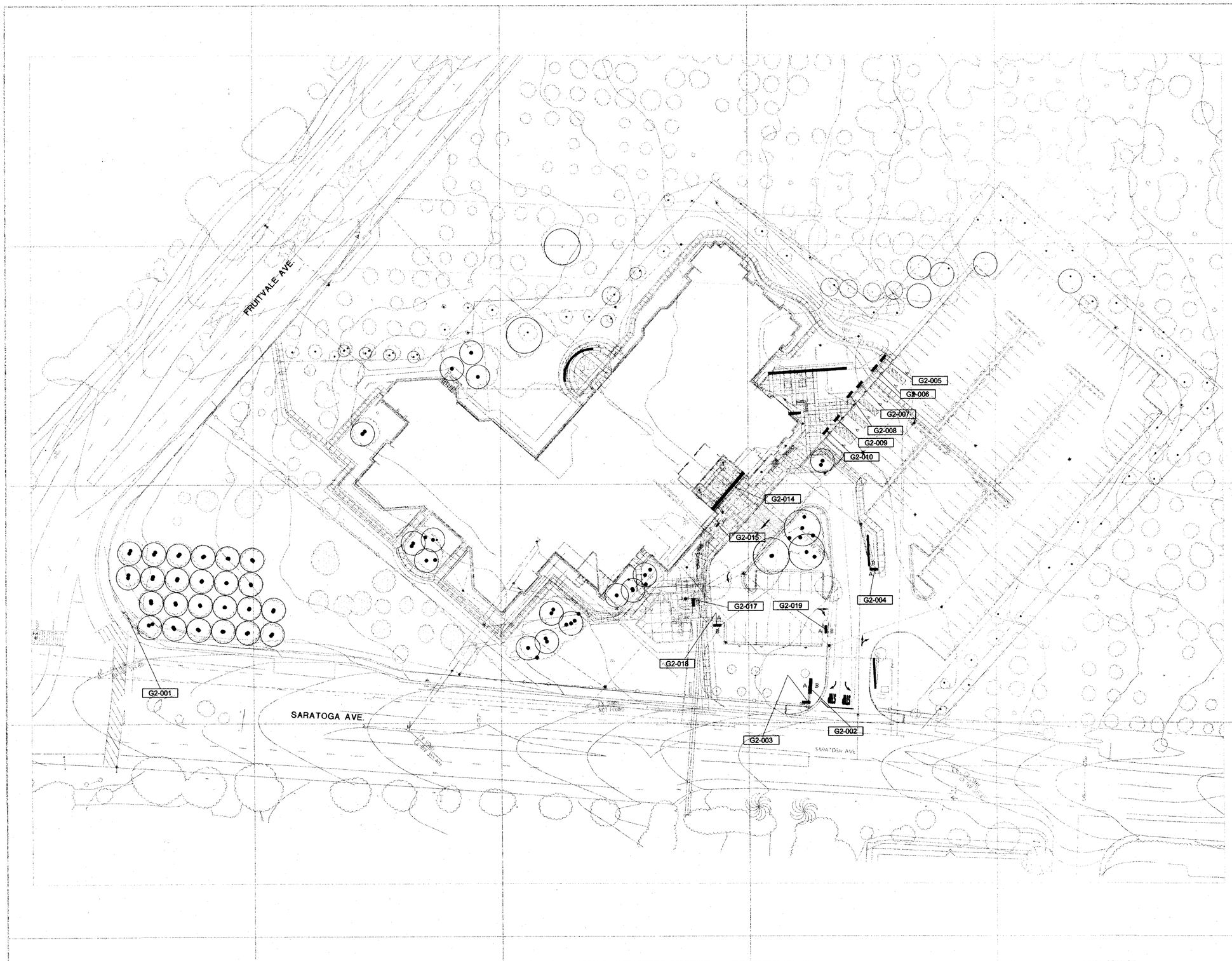

FIELD PAOLI

Architecture
1045 Sansome St.
Suite 206
San Francisco
California, 94111
Tel. 415. 788. 6606
Fax 415. 788. 6650

SARATOGA LIBRARY

13650 Saratoga Avenue
Saratoga, California 95070

DONNELLY DESIGN
Environmental Graphic Design
167 Main Street
Rio Vista, CA 94571
707 374-2334
fax 374-2144

DATE OCTOBER 26, 2001

REVISIONS

CONSTRUCTION DOCUMENTS
BID SET

SCALE

DRAWN BY

CHECKED BY

JOB NO.

EXTERIOR SIGN LOCATION PLAN

SHEET NO. **G2.0**

All drawings and written material appearing herein constitute the original and unpublished work of the architect and the same may not be duplicated, used, or disclosed without the written consent of the architect ©Field Paoli

C:\DD CADD\FPA0001\G2.dwg, 10/24/2001 04:40:07 PM, HP Designjet 500PS42_HPGL2 Card.pc3

FIELD PAOLI

Architecture
1045 Sansome St.
Suite 206
San Francisco
California, 94111
Tel. 415. 788. 6606
Fax 415. 788. 6650

SARATOGA LIBRARY

13650 Saratoga Avenue
Saratoga, California 95070

DONNELLY DESIGN
Environmental Graphic Design
167 Main Street
Rio Vista, CA 94571
707 374-2334
fax 374-2144

DATE OCTOBER 26, 2001

REVISIONS

CONSTRUCTION DOCUMENTS
BID SET

A2.1A A2.1C A2.1B

SCALE

DRAWN BY

CHECKED BY

JOB NO.

EXTERIOR SIGN LOCATION PLAN

SHEET NO. **G2.0**

All drawings and written material appearing herein constitute the original and unpublished work of the architect and the same may not be duplicated, used, or disclosed without the written consent of the architect © Field Paoli

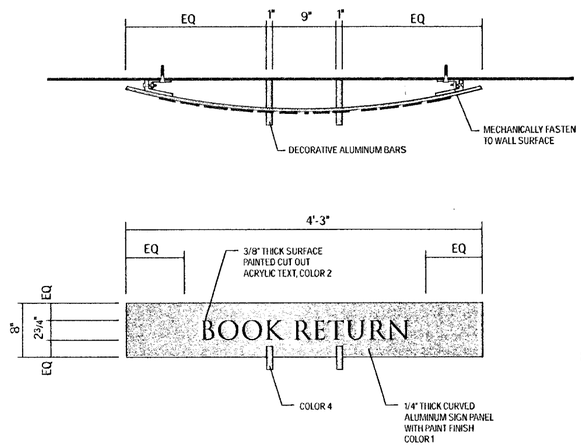

6 / G3.0 **Sign Type W3**
SCALE: 1/8" = 1"

Wall mounted area identification sign. Sign is constructed of a curved aluminum sign panel with paint finish and surface applied dimensional text. Mechanically fasten to wall surface.

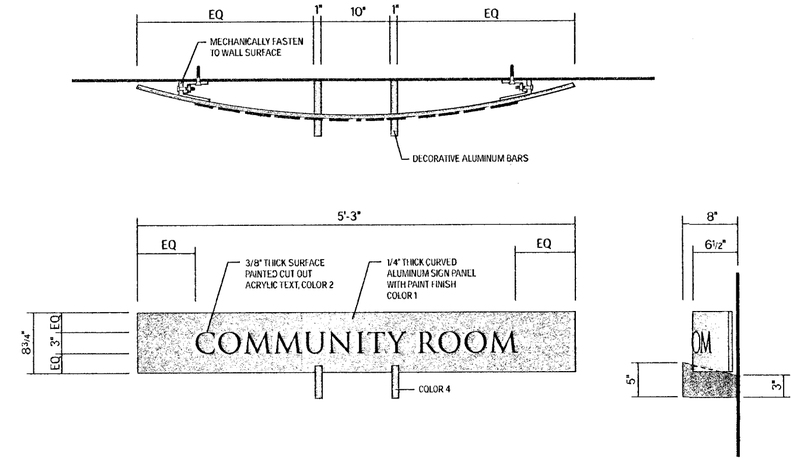

5 / G3.0 **Sign Type W2**
SCALE: 1/8" = 1"

Wall mounted room identification sign. Sign is constructed of a curved aluminum sign panel with paint finish and surface applied dimensional text. Mechanically fasten to wall surface.

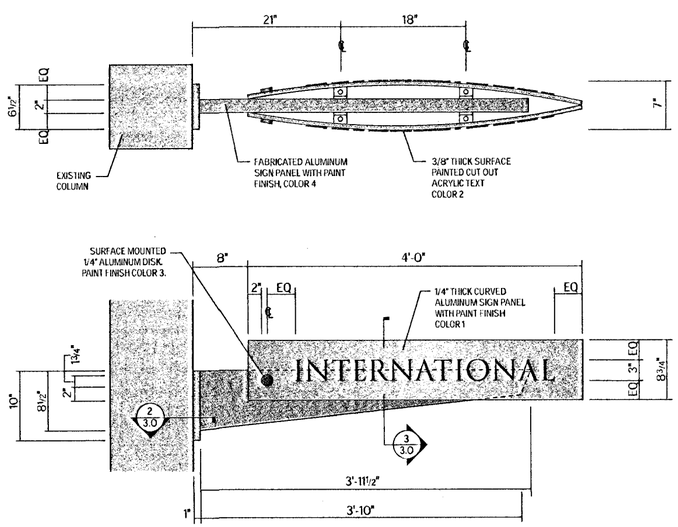

4 / G3.0 **Sign Type P1**
SCALE: 1/8" = 1"

Flag mounted area identification sign. Sign is constructed of fabricated aluminum core and curved sign panels with paint finish. Mechanically fasten to column. Dimensional text is surface applied. Curved sign panels are removable to facilitate library changes.

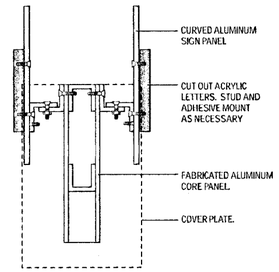

3 / G3.0 **Section**
NOT TO SCALE

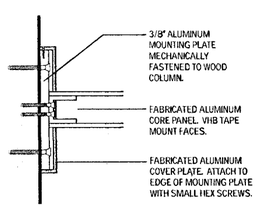

2 / G3.0 **Section**
NOT TO SCALE

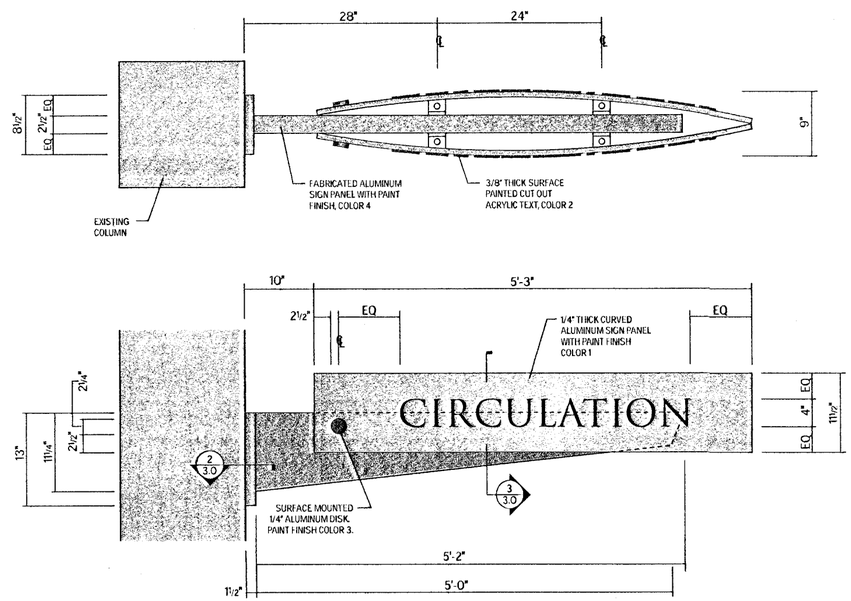

1 / G3.0 **Sign Type P2**
SCALE: 1/8" = 1"

Large flag mounted circulation desk identification sign. Sign is constructed of fabricated aluminum core and curved sign panels with paint finish. Mechanically fasten to column. Dimensional text is surface applied.

FIELD PAOLI

Architecture
1045 Sansome St.
Suite 206
San Francisco
California, 94111
Tel. 415. 788. 6606
Fax 415. 788. 6650

SARATOGA LIBRARY

13650 Saratoga Avenue
Saratoga, California 95070

DONNELLY DESIGN
Environmental Graphic Design
167 Main Street
Rio Vista, CA 94571
707 374-2334
fax 374-2144
mailroom@donnellydesign.com

©2001

DATE OCTOBER 26, 2001

REVISIONS

CONSTRUCTION DOCUMENTS
BID SET

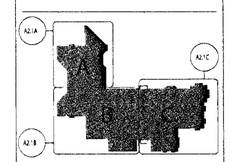

SCALE

DRAWN BY

CHECKED BY

JOB NO.

INTERIOR SIGN TYPE DRAWINGS

SHEET NO. **G3.0**

All drawings and written material appearing herein constitute the original and unpublished work of the architect and the same may not be duplicated, used, or disclosed without the written consent of the architect ©Field Paoli

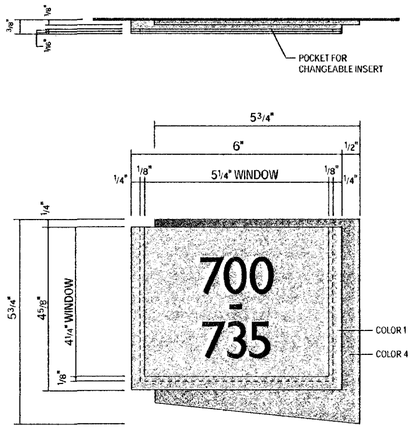

5 / G3.1 Sign Type S2

SCALE: 5/8" = 1"

Book stock marker with area for changeable insert. 1/8" thick surface painted acrylic back plaque. 1/16" thick spacers to allow insert to slide in top of sign. 1/16" thick face plaque made of non-glare, optically clear acrylic that allows clear reading of insert. Face of plaque is surface painted creating a border around the clear window. Silastic or foam tape mount.

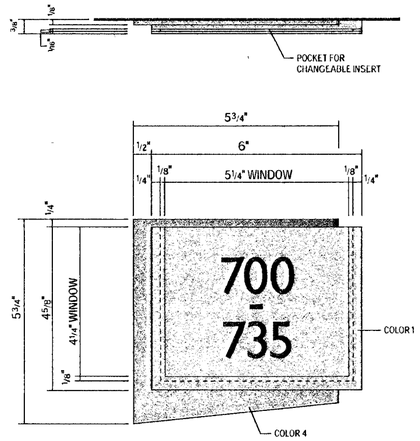

4 / G3.1 Sign Type S1

SCALE: 5/8" = 1"

Book stock marker with area for changeable insert. 1/8" thick surface painted acrylic back plaque. 1/16" thick spacers to allow insert to slide in top of sign. 1/16" thick face plaque made of non-glare, optically clear acrylic that allows clear reading of insert. Face of plaque is surface painted creating a border around the clear window. Silastic or foam tape mount.

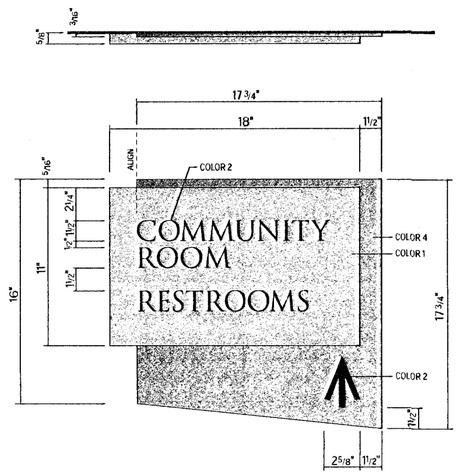

3 / G3.1 Sign Type D2

SCALE: 1/4" = 1"

Secondary wall mounted directional sign. Surface painted laminated acrylic panels with vinyl text and arrow. Paint edges of sign panel to match sign face. Silastic mount.

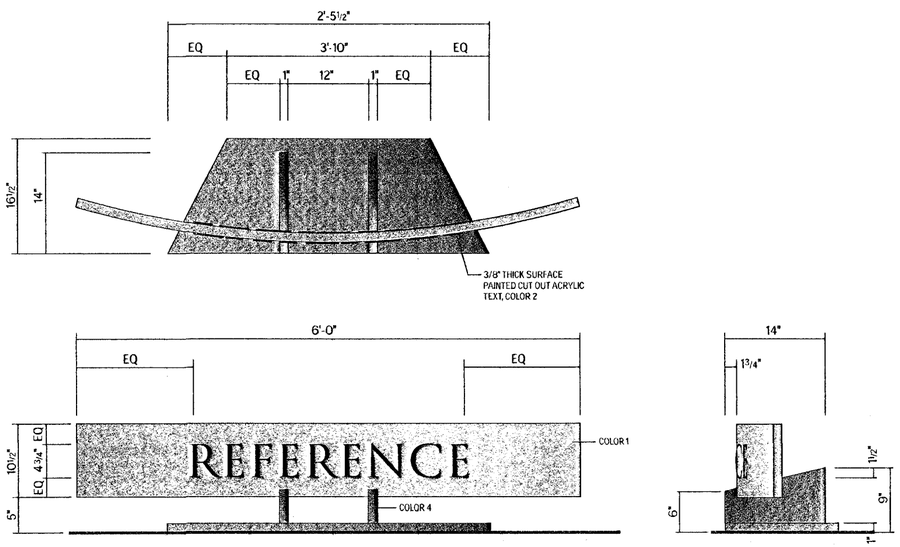

2 / G3.1 Sign Type F3

SCALE: 1/8" = 1"

Freestanding reference desk identification sign. Sign is constructed of a fabricated aluminum stand and curved sign panel with paint finish. Dimensional text is surface painted.

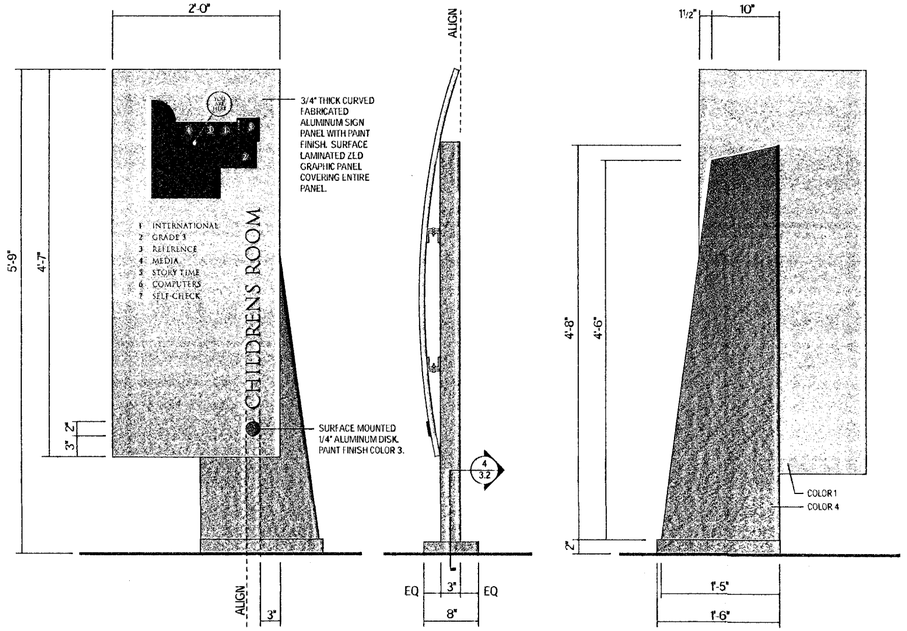

1 / G3.1 Sign Type F1

SCALE: 1/8" = 1"

Freestanding children's directory. Sign is constructed of fabricated aluminum core and curved sign panel with paint finish. Sign face is a laminated ZED embedded digital print running edge to edge.

FIELD PAOLI

Architecture
1045 Sansome St.
Suite 206
San Francisco
California, 94111
Tel. 415. 788. 6606
Fax 415. 788. 6650

SARATOGA LIBRARY

13650 Saratoga Avenue
Saratoga, California 95070

DONNELLY DESIGN
Environmental Graphic Design
167 Main Street
Rio Vista, CA 94571
707 374-2334
fax 374-2144
mailroom@donnellydesign.com

©2001

DATE OCTOBER 26, 2001

REVISIONS

CONSTRUCTION DOCUMENTS
BID SET

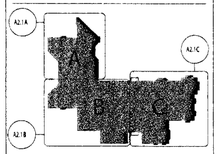

SCALE

DRAWN BY

CHECKED BY

JOB NO.

INTERIOR SIGN TYPE DRAWINGS

SHEET NO. **G3.1**

All drawings and written material appearing herein constitute the original and unpublished work of the architect and the same may not be duplicated, used, or disclosed without the written consent of the architect ©Field Paoli

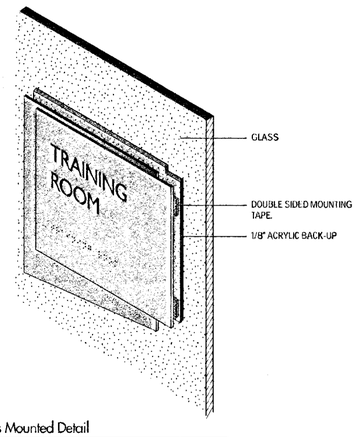

5 G3.2 Glass Mounted Detail
NOT TO SCALE

All sign plaques mounted on glass should have a 1/8" acrylic back-up to cover installation. Acrylic back-up follows the same shape as the sign backing plate. Paint finish color 4.

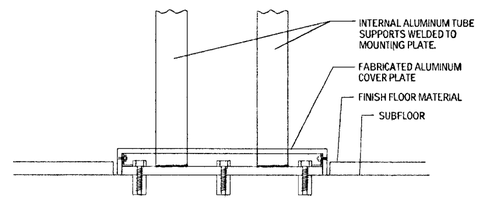

4 G3.2 Section
NOT TO SCALE

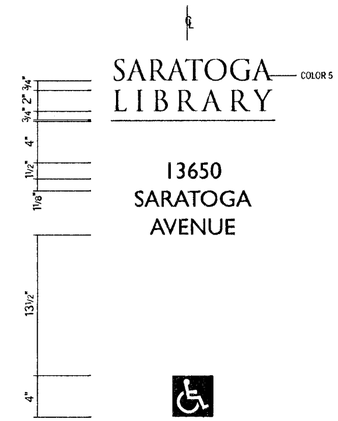

3 G3.2 Sign Type V1
SCALE 3/16" = 1"

Surface applied white vinyl graphics. Wheelchair symbol is cut out of vinyl square, revealing glass mounting surface.

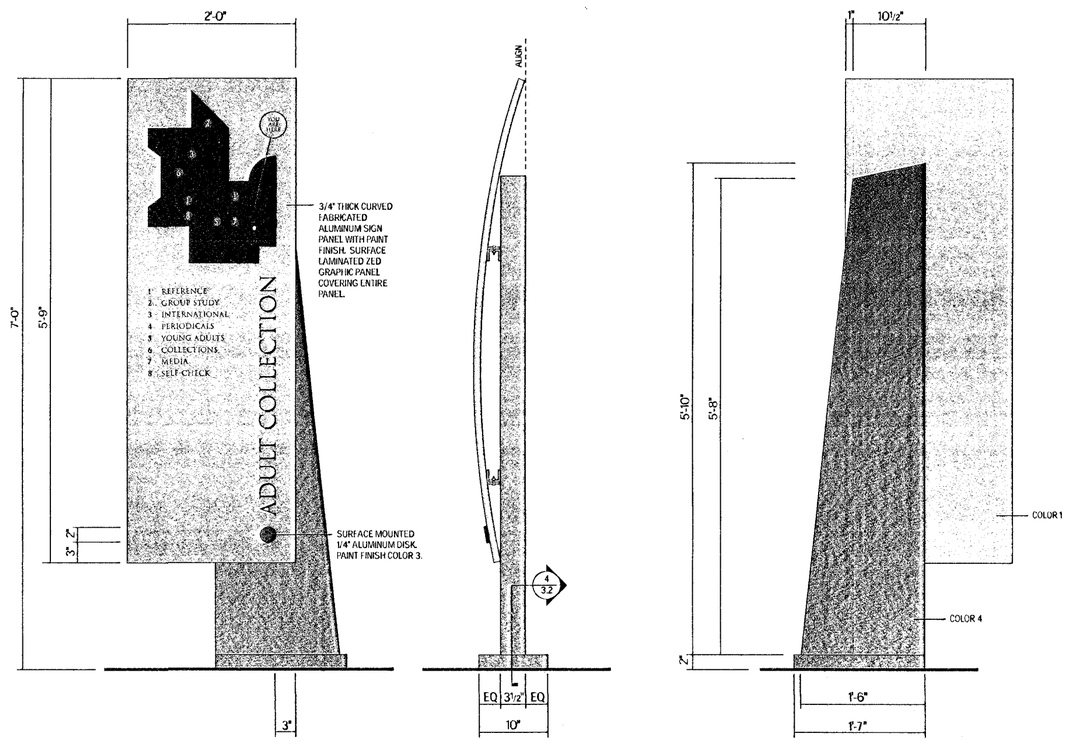

2 G3.2 Sign Type F2
SCALE 1/8" = 1"

Freestanding adult library directory. Sign is constructed of fabricated aluminum core and curved sign panel with paint finish. Sign face is a laminated ZED embedded digital print running edge to edge.

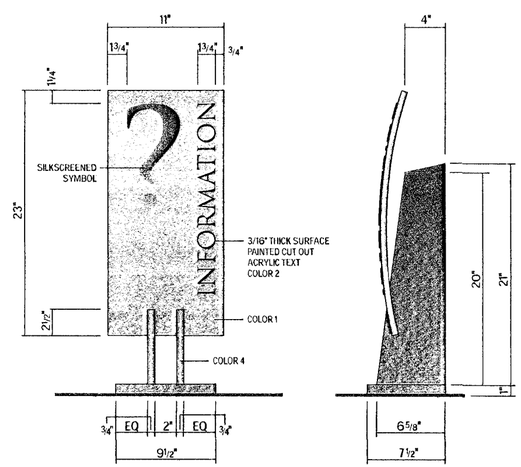

1 G3.2 Sign Type F4
SCALE 3/16" = 1"

Freestanding children's information desk identification sign. Sign is constructed of a fabricated aluminum stand and curved sign panel with paint finish. "Information" text is dimensional.

FIELD PAOLI

Architecture
1045 Sansome St.
Suite 206
San Francisco
California, 94111
Tel. 415. 788. 6606
Fax 415. 788. 6650

SARATOGA LIBRARY

SANTA CLARA COUNTY LIBRARY

13650 Saratoga Avenue
Saratoga, California 95070

DONNELLY DESIGN
Environmental Graphic Design
167 Main Street
Rio Vista, CA 94571
707 374-2334
fax 374-2144
mailroom@donnellydesign.com

©2001

DATE OCTOBER 26, 2001

REVISIONS

CONSTRUCTION DOCUMENTS
BID SET

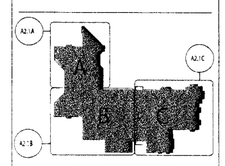

SCALE

DRAWN BY

CHECKED BY

JOB NO.

INTERIOR SIGN TYPE DRAWINGS

SHEET NO. **G3.2**

All drawings and written material appearing herein constitute the original and unpublished work of the architect and the same may not be duplicated, used, or disclosed without the written consent of the architect ©Field Paoli

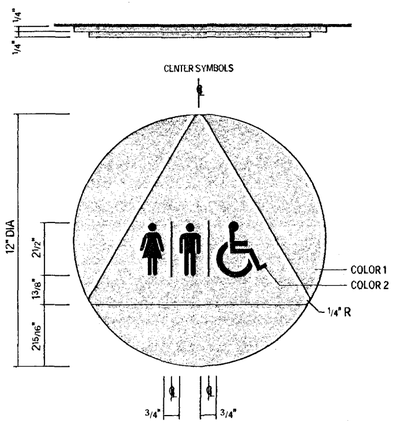

8 G3.3 Sign Type C1

SCALE: 3/8" = 1"

Code required accessible unisex restroom identification sign. 1/4" thick acrylic surface painted back panel laminated to 1/4" surface painted acrylic text plaque. Symbols are surface silkscreened. Paint edges of sign to match sign face. Silastic or foam tape mount

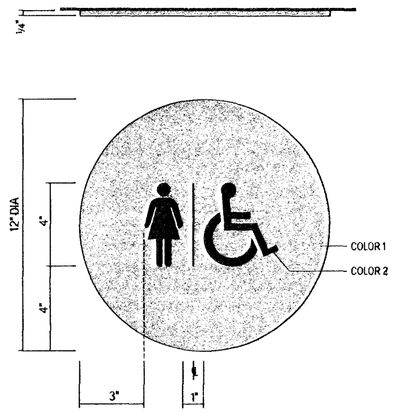

7 G3.3 Sign Type C2

SCALE: 3/8" = 1"

Code required accessible women's restroom identification sign. 1/4" thick surface painted acrylic plaque. Symbols are surface silkscreened. Paint edges of sign to match sign face. Silastic or foam tape mount

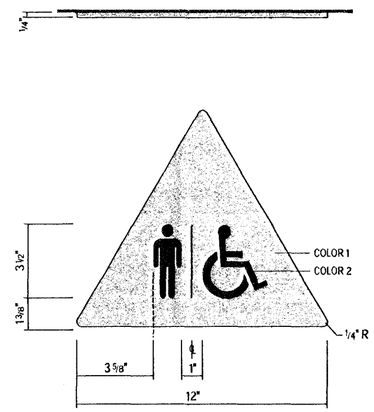

6 G3.3 Sign Type C3

SCALE: 3/8" = 1"

Code required accessible men's restroom identification sign. 1/4" thick surface painted acrylic plaque. Symbols are surface silkscreened. Paint edges of sign to match sign face. Silastic or foam tape mount

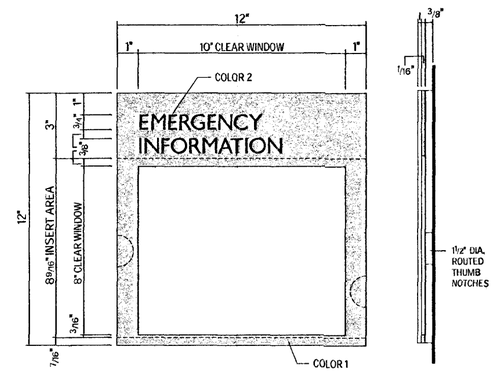

5 G3.3 Sign Type C4

SCALE: 3/8" = 1"

Code required evacuation map holder. Sign contractor responsible for providing map artwork. 3/8" thick acrylic surface painted back plaque. 1/16" thick spacers to allow for insertion of map by sliding it in horizontally from either side. 1/16" thick face plaque made of non-glare, optically clear acrylic that allows clear reading of map. Face of plaque is surface painted creating a border around the clear window. Text is surface silkscreened. Silastic or foam tape mount.

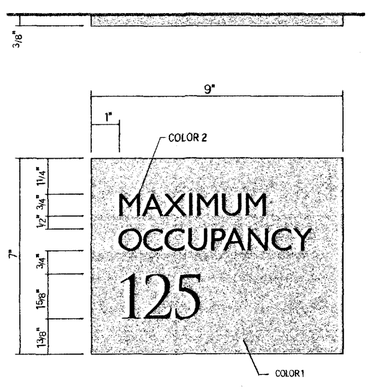

4 G3.3 Sign Type C5

SCALE: 1/2" = 1"

Code required maximum occupancy sign. 3/8" thick surface painted acrylic plaque with surface applied vinyl text. Silastic or foam tape mount.

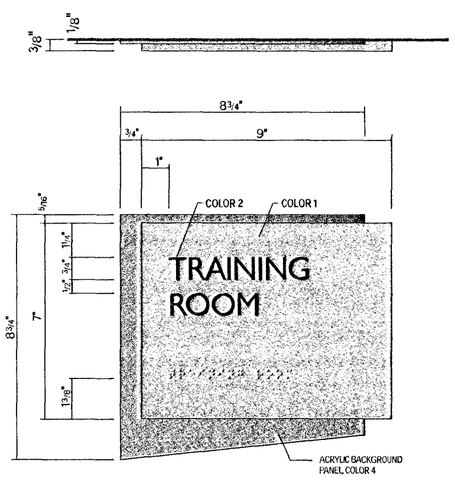

3 G3.3 Sign Type R1

SCALE: 1/2" = 1"

Primary room identification sign. Acrylic sign panels with laminated photopolymer sign face. Text is raised 1/32" and accompanied by tactile Grade 2 braille. Braille should be painted to match sign face.

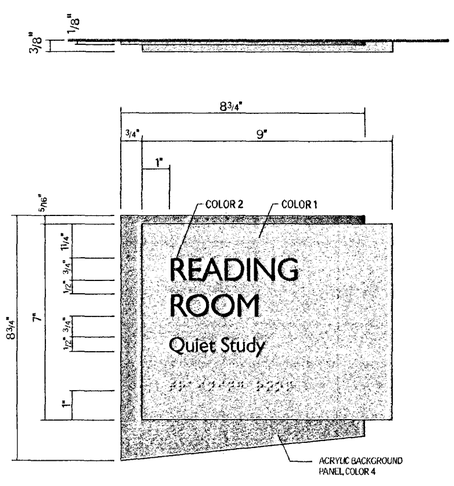

2 G3.3 Sign Type R2

SCALE: 1/2" = 1"

Primary room identification sign with secondary text. Acrylic sign panels with laminated photopolymer sign face. Room identification text is raised 1/32" and accompanied by tactile Grade 2 braille. Informational text is surface silkscreened. Braille should be painted to match sign face.

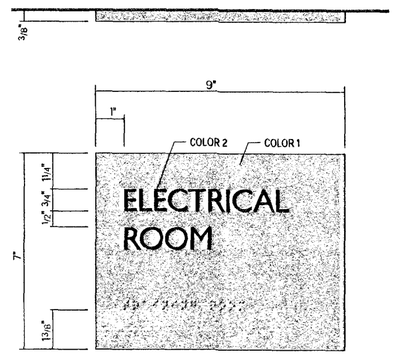

1 G3.3 Sign Type R3

SCALE: 1/2" = 1"

Secondary room identification sign. Acrylic back panel with laminated photopolymer sign face. Text is raised 1/32" and accompanied by tactile Grade 2 braille. Braille should be painted to match sign face. Paint sign edges to match sign face. Silastic or foam tape mount.

FIELD PAOLI

Architecture
1045 Sansome St.
Suite 206
San Francisco
California, 94111
Tel. 415. 788. 6606
Fax 415. 788. 6650

SARATOGA LIBRARY

13650 Saratoga Avenue
Saratoga, California 95070

DONNELLY DESIGN
Environmental Graphic Design
167 Main Street
Rio Vista, CA 94571
707 374-2334
fax 374-2144
mailroom@donnellydesign.com

©2001

DATE OCTOBER 28, 2001

REVISIONS

CONSTRUCTION DOCUMENTS
BID SET

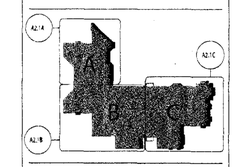

SCALE

DRAWN BY

CHECKED BY

JOB NO.

INTERIOR SIGN TYPE DRAWINGS

SHEET NO. **G3.3**

All drawings and written material appearing herein constitute the original and unpublished work of the architect and the same may not be duplicated, used, or disclosed without the written consent of the architect ©Field Paoli

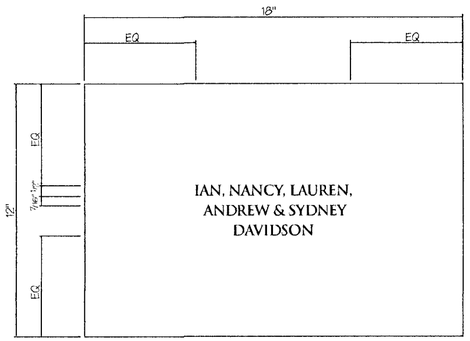

6 / G3.4 Sign Type DR2
SCALE: 3/8" = 1"

12" x 18" slated tile with text sandblasted into tile. Fill text with pigmented epoxy sealer. Refer to Architectural drawings for sign locations and tile specifications.

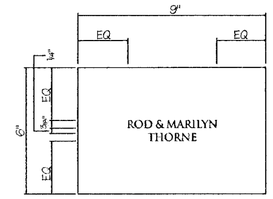

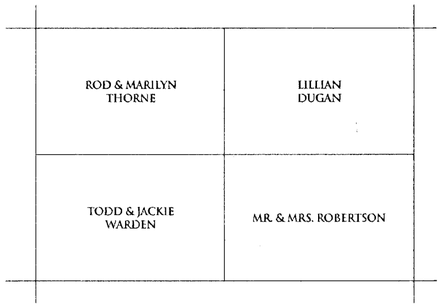

7 / G3.4 Sign Type DR3
SCALE: 3/8" = 1"

6" x 9" slate tile with text sandblasted into tile. Fill text with pigmented epoxy sealer. 6"X9" tiles are set in a 12" x18" pattern. Refer to Architectural drawings for sign locations and tile specifications.

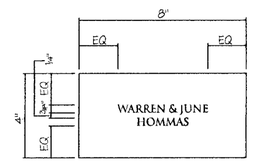

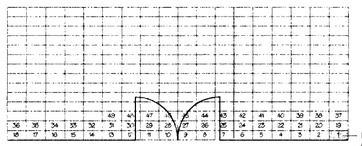

REPLACE BRICKS MOVING RIGHT TO LEFT, STARTING AT EDGE OF BUILDING AND MOVING OUT. REFER TO LANDSCAPE DRAWINGS FOR EXACT PAVING CONFIGURATION

5 / G3.4 Sign Type DR1
SCALE: 3/8" = 1"

4" x 8" brick paver with text sandblasted into brick. Fill text with pigmented epoxy sealer. Refer to landscape drawings for brick specifications.

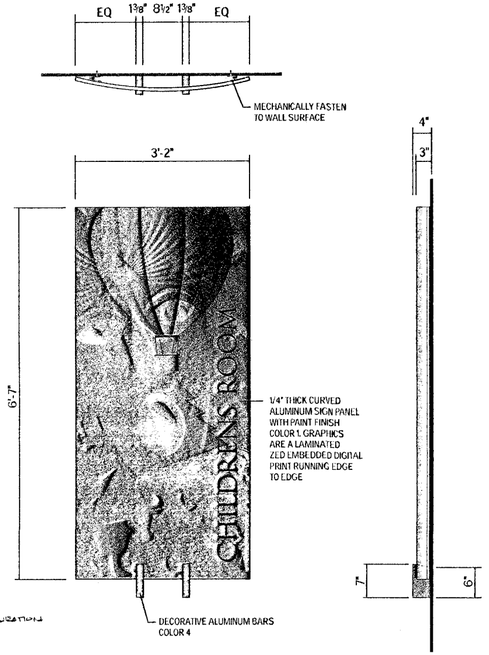

4 / G3.4 Sign Type D1
SCALE: 1"=1'-0"

Wall mounted area identification sign. Sign is constructed of curved aluminum sign panel with laminated ZED embedded digital print running edge to edge.

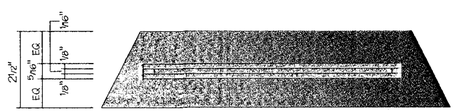

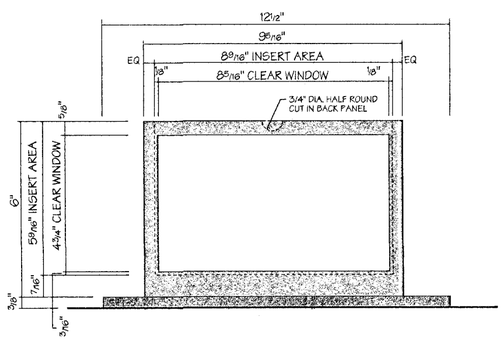

3 / G3.4 Sign Type S4
SCALE: 1/2"=1"

Freestanding acrylic informational sign with clear window to show changeable 8½"x 5½" laser print insert. 1/8" acrylic surface painted back plaque. 1/16" thick spacers to allow insert to slide into top of sign. 1/16" thick face plaque made of non-glare, optically clear acrylic that allows clear reading of insert. Face of front plaque is surface painted to creating a border around clear window. Surface paint plaque background. Apply felt to bottom of aluminum plate stand.

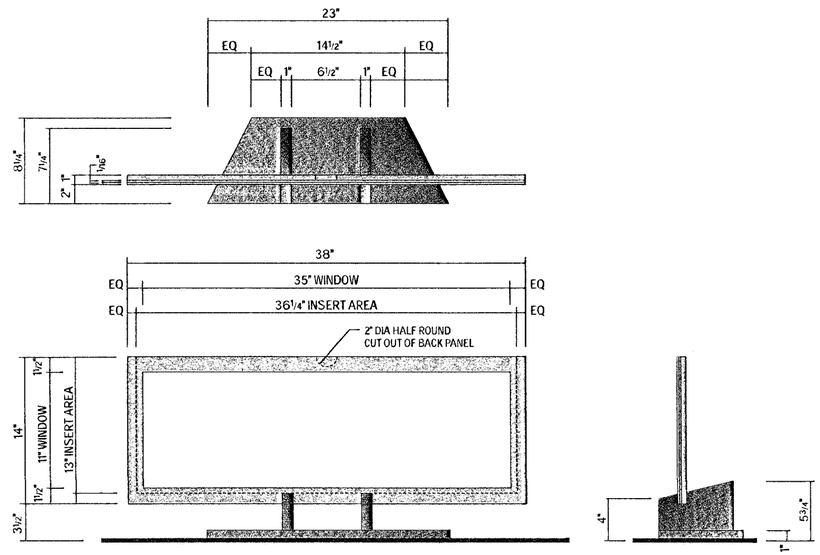

2 / G3.4 Sign Type S3
SCALE: 3/16" = 1"

Freestanding promotional poster holder. Sign is constructed of a fabricated aluminum stand and acrylic sign panel with area for insert. 7/8" acrylic surface painted back plaque. 1/16" thick spacers to allow insert to slide into top of sign. 1/16" thick face plaque made of non-glare, optically clear acrylic that allows clear reading of insert. Face of front plaque is surface painted to creating a border around clear window. Paint back plaque so background color shows thru clear window.

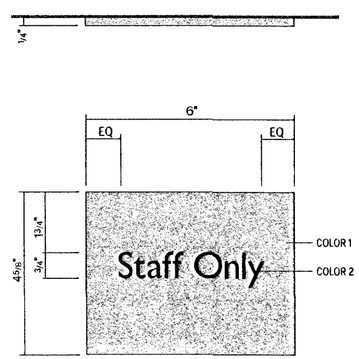

1 / G3.4 Sign Type J1
SCALE: 5/8" = 1"

Secondary informational sign. Surface painted acrylic panel with silkscreened text. Paint sign edges to match sign face. Silastic or foam tape mount.

FIELD PAOLI

Architecture
1045 Sansome St.
Suite 206
San Francisco
California, 94111
Tel. 415. 788. 6606
Fax 415. 788. 6650

SARATOGA LIBRARY

13650 Saratoga Avenue
Saratoga, California 95070

DONNELLY DESIGN
Environmental Graphic Design
167 Main Street
Rio Vista, CA 94571
707 374-2334
fax 374-2144
mailroom@donnellydesign.com

©2001

DATE OCTOBER 26, 2001

REVISIONS

CONSTRUCTION DOCUMENTS
BID SET

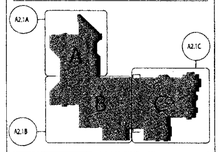

SCALE
DRAWN BY
CHECKED BY
JOB NO.

INTERIOR SIGN TYPE DRAWINGS

SHEET NO. **G3.4**

All drawings and written material appearing herein constitute the original and unpublished work of the architect and the same may not be duplicated, used, or disclosed without the written consent of the architect ©Field Paoli

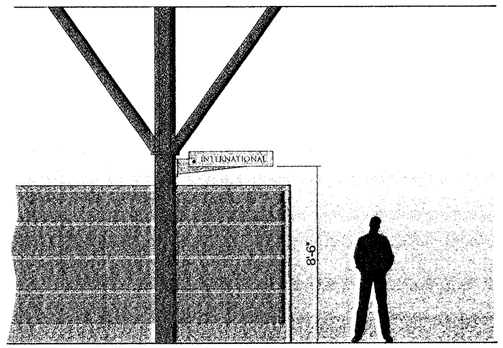

9 G3.5 Elevation Sign Type P1
SCALE: 3/8" = 1'-0"

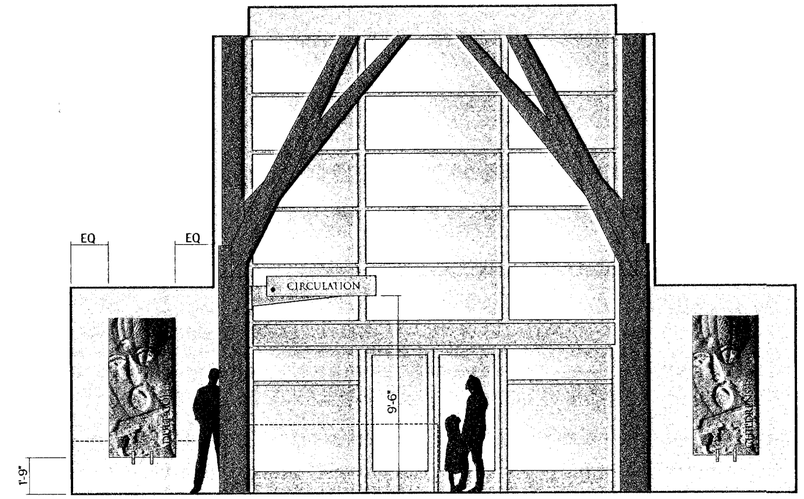

8 G3.5 Elevation Sign Types D1, P2
SCALE: 3/8" = 1'-0"

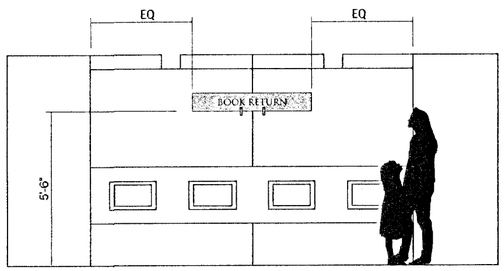

7 G3.5 Elevation Sign Type W3
SCALE: 1/2" = 1'-0"

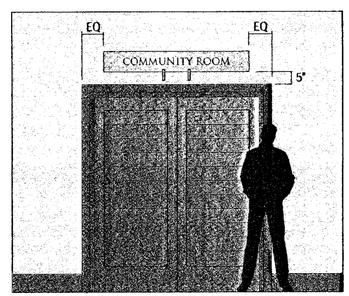

6 G3.5 Elevation Sign Type W2
SCALE: 1/2" = 1'-0"

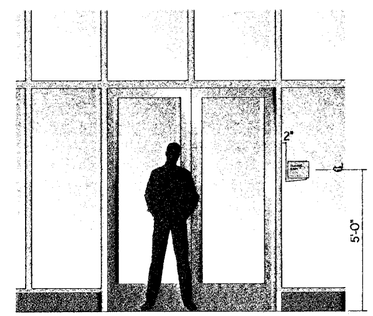

5 G3.5 Elevation Sign Type R1
SCALE: 1/2" = 1'-0"

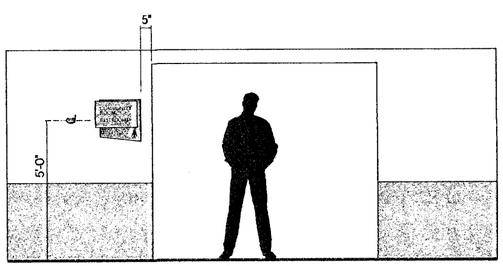

4 G3.5 Elevation Sign Type D2
SCALE: 1/2" = 1'-0"

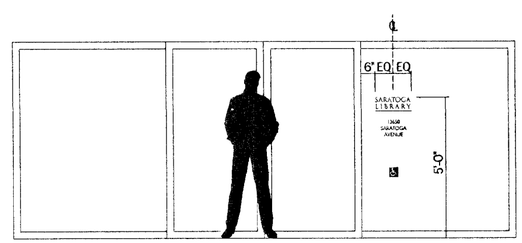

3 G3.5 Elevation Sign Type V1
SCALE: 1/2" = 1'-0"

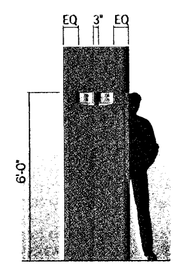

2 G3.5 Elevation Sign Type S1, S2
SCALE: 1/2" = 1'-0"

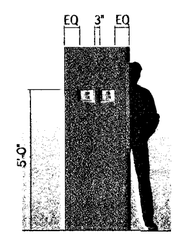

1 G3.5 Elevation Sign Type S1, S2
SCALE: 1/2" = 1'-0"

FIELD PAOLI

Architecture
1045 Sansome St.
Suite 206
San Francisco
California, 94111
Tel. 415. 788. 6606
Fax 415. 788. 6650

SARATOGA LIBRARY

13650 Saratoga Avenue
Saratoga, California 95070

DONNELLY DESIGN
Environmental Graphic Design
167 Main Street
Rio Vista, CA 94571
707 374-2334
fax 374-2144
mailroom@donnellydesign.com

© 2001

DATE OCTOBER 26, 2001

REVISIONS

CONSTRUCTION DOCUMENTS
BID SET

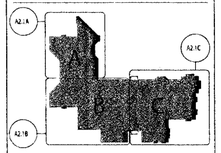

SCALE

DRAWN BY

CHECKED BY

JOB NO.

INTERIOR SIGN TYPE ELEVATIONS

SHEET NO. **G3.5**

All drawings and written material appearing herein constitute the original and unpublished work of the architect and the same may not be duplicated, used, or disclosed without the written consent of the architect ©Field Paoli

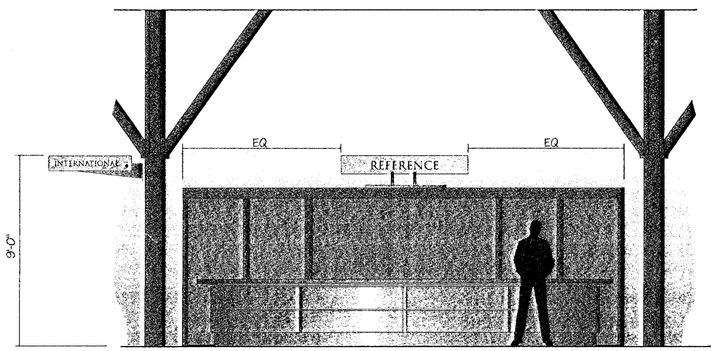

8 / G3.6 Elevation Sign Type F3
SCALE: 3/8" = 1'-0"

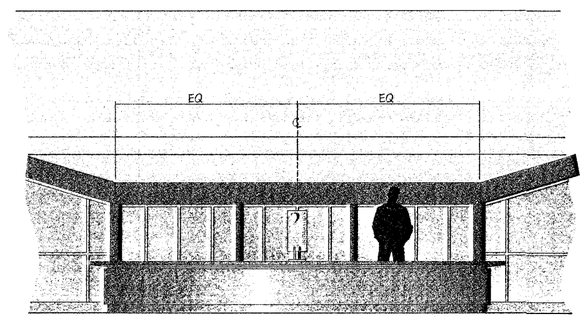

7 / G3.6 Elevation Sign Type F4
SCALE: 3/8" = 1'-0"

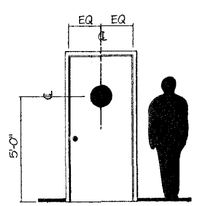

6 / G3.6 Elevation Sign Type C1
SCALE: 3/8" = 1'-0"

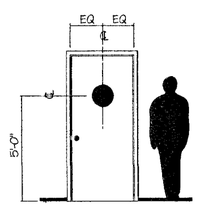

5 / G3.6 Elevation Sign Type C2
SCALE: 3/8" = 1'-0"

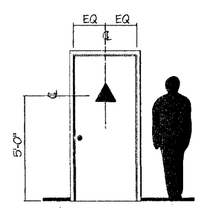

4 / G3.6 Elevation Sign Type C3
SCALE: 3/8" = 1'-0"

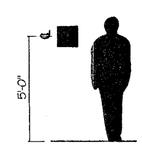

3 / G3.6 Elevation Sign Type C4
SCALE: 3/8" = 1'-0"

2 / G3.6 Elevation Sign Type C5
SCALE: 3/8" = 1'-0"

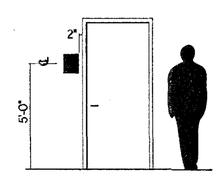

1 / G3.6 Elevation Sign Type R2, R3
SCALE: 3/8" = 1'-0"

FIELD PAOLI

Architecture
1045 Sansome St.
Suite 206
San Francisco
California, 94111
Tel. 415. 788. 6606
Fax 415. 788. 6650

SARATOGA LIBRARY

13650 Saratoga Avenue
Saratoga, California 95070

DONNELLY DESIGN
Environmental Graphic Design
167 Main Street
Rio Vista, CA 94571
707 374-2334
fax 374-2144
mailroom@donnellydesign.com

©2001

DATE OCTOBER 26, 2001

REVISIONS

CONSTRUCTION DOCUMENTS
BID SET

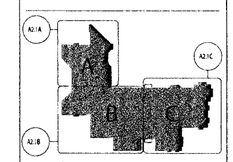

SCALE
DRAWN BY
CHECKED BY
JOB NO.

INTERIOR SIGN TYPE ELEVATIONS

SHEET NO. **G3.6**

All drawings and written material appearing herein constitute the original and unpublished work of the architect and the same may not be duplicated, used, or disclosed without the written consent of the architect ©Field Paoli

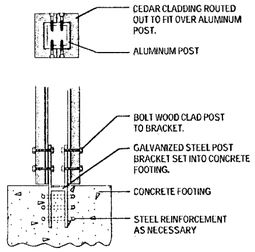

7 G4.0 Section (Typical Wood Clad Post Detail)
NOT TO SCALE

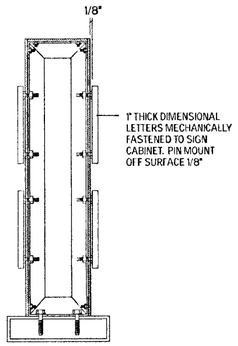

6 G4.0 Section
NOT TO SCALE

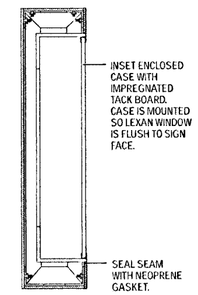

5 G4.0 Section
NOT TO SCALE

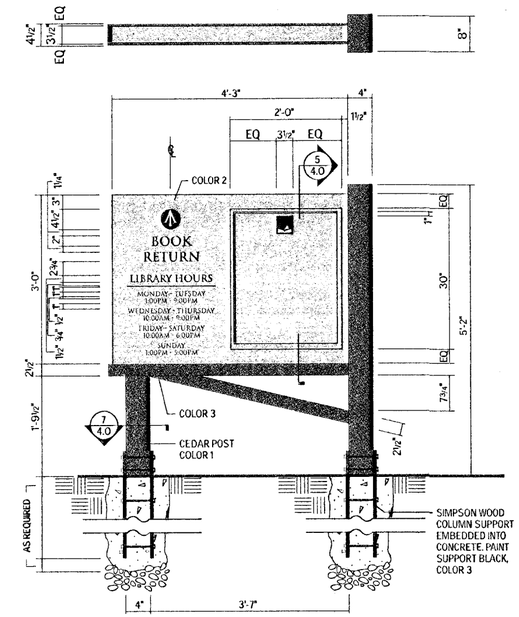

4 G4.0 Sign Type F3
SCALE: 1" = 1'-0"

Non-illuminated post and panel sign with integrated vinyl impregnated tack board. Sign is constructed of cedar posts with fabricated aluminum sign panel and supports. Graphics are surface applied vinyl. Weatherproof aluminum cabinet with clear Lexan window for tack board. Reverse silkscreen library logo on back of Lexan.

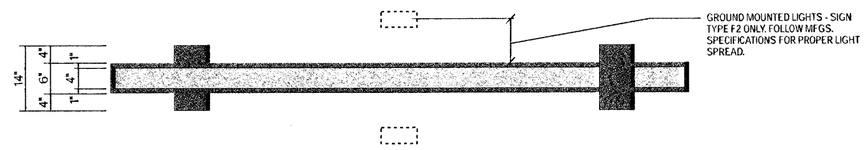

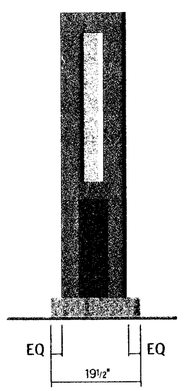

3 G4.0 Side View for Sign Type F1, F2
SCALE: 1" = 1'-0"

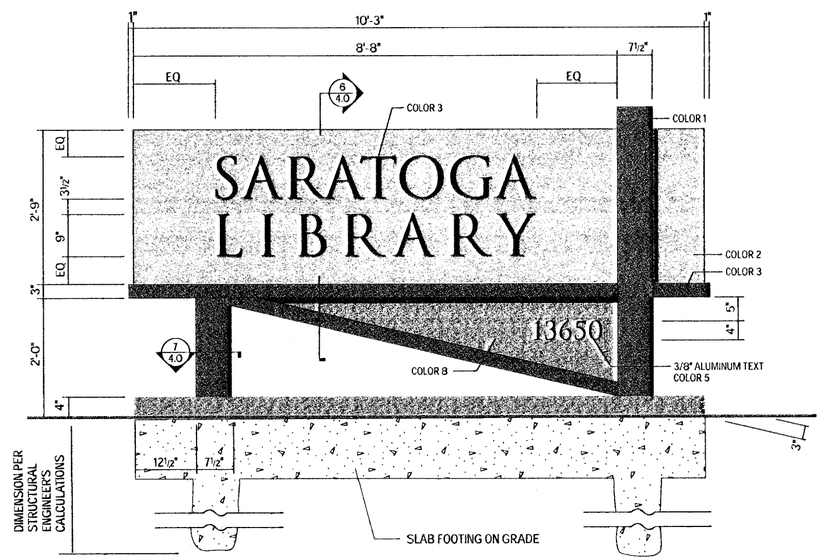

2 G4.0 Sign Type F2
SCALE: 1" = 1'-0"

Ground illuminated freestanding post and panel main identification sign. Cedar wood cladding over metal post structure with fabricated aluminum sign panel and supports. Graphics are mechanically fastened fabricated aluminum letters with paint finish.

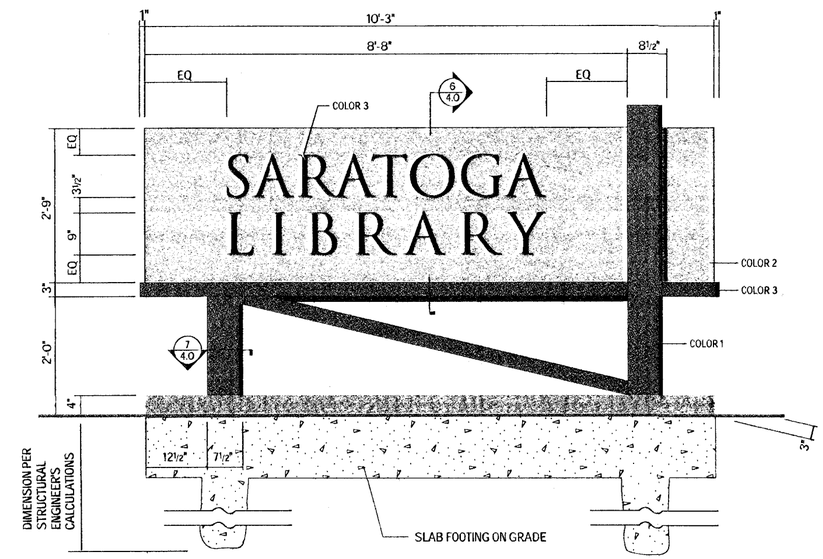

1 G4.0 Sign Type F1 - FUTURE SIGN, N.I.C.
SCALE: 1" = 1'-0"

Non- illuminated freestanding post and panel site identification sign. Cedar wood cladding over metal post structure with fabricated aluminum sign panel and supports. Graphics are mechanically fastened fabricated aluminum letters with paint finish.

FIELD PAOLI

Architecture
1045 Sansome St.
Suite 206
San Francisco
California, 94111
Tel. 415. 788. 6606
Fax 415. 788. 6650

SARATOGA LIBRARY

13650 Saratoga Avenue
Saratoga, California 95070

DONNELLY DESIGN
Environmental Graphic Design
167 Main Street
Rio Vista, CA 94571
707 374-2334
fax 374-2144
mailroom@donnellydesign.com

© 2001

DATE OCTOBER 26, 2001

REVISIONS

CONSTRUCTION DOCUMENTS
BID SET

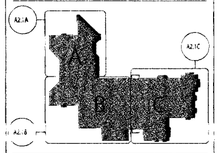

SCALE
DRAWN BY
CHECKED BY
JOB NO.

EXTERIOR SIGN TYPE DRAWINGS

SHEET NO. **G4.0**

All drawings and written material appearing herein constitute the original and unpublished work of the architect and the same may not be duplicated, used, or disclosed without the written consent of the architect ©Field Paoli

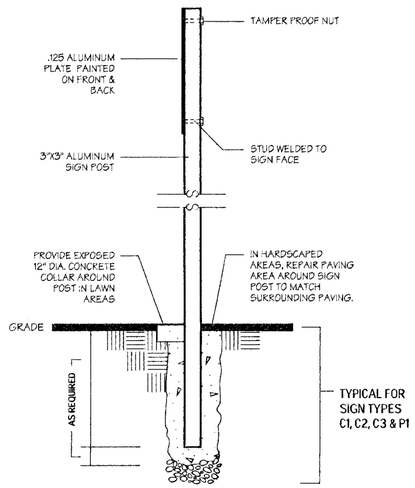

6 G4.1 Construction Detail Sign Types C1, C2

NOT TO SCALE

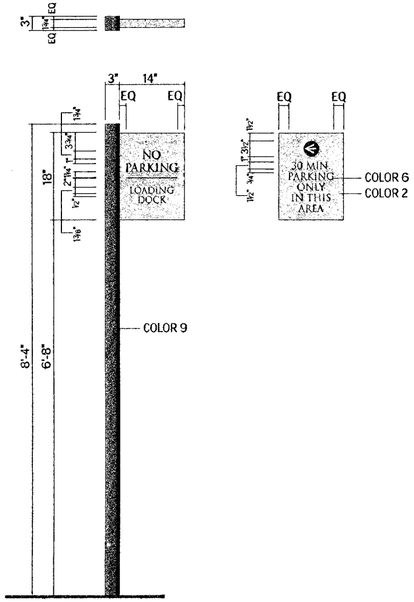

5 G4.1 Sign Type P1

SCALE: 1" = 1'-0"

Freestanding parking control sign. Painted aluminum post with a mechanically fastened fabricated aluminum sign face and vinyl graphics. Paint back of sign panel.

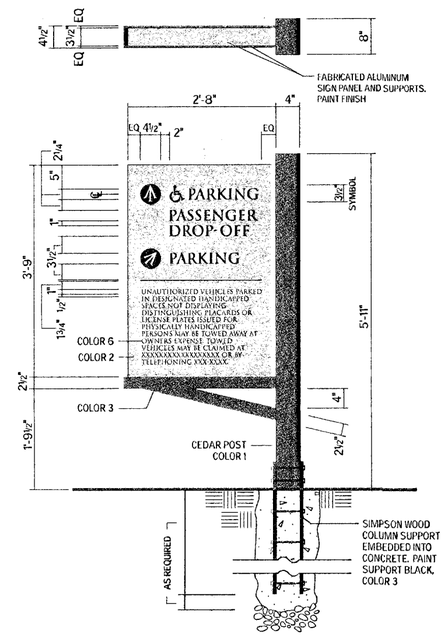

4 G4.1 Sign Type D1

SCALE: 1" = 1'-0"

Non-illuminated freestanding post and panel directional sign. Cedar post with fabricated aluminum sign panel and supports. Graphics are surface applied vinyl.

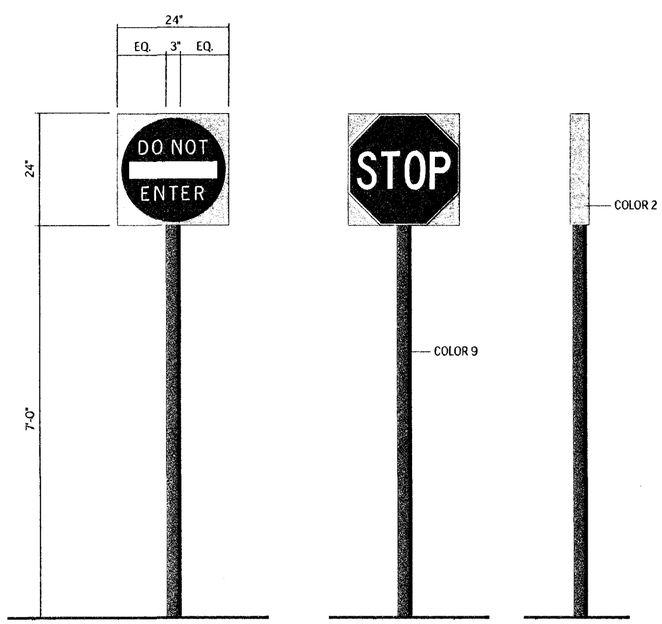

3 G4.1 Sign Type C3

SCALE: 1" = 1'-0"

Two sided freestanding parking control sign. Painted aluminum post with a fabricated aluminum sign cabinet. Graphics are surface applied vinyl.

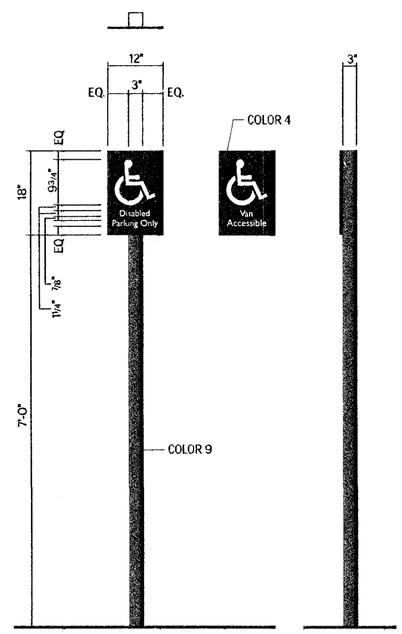

2 G4.1 Sign Type C2

SCALE: 1" = 1'-0"

Freestanding parking control sign. Painted aluminum post with a mechanically fastened 0.125" aluminum plate sign face. Paint back of sign panel.

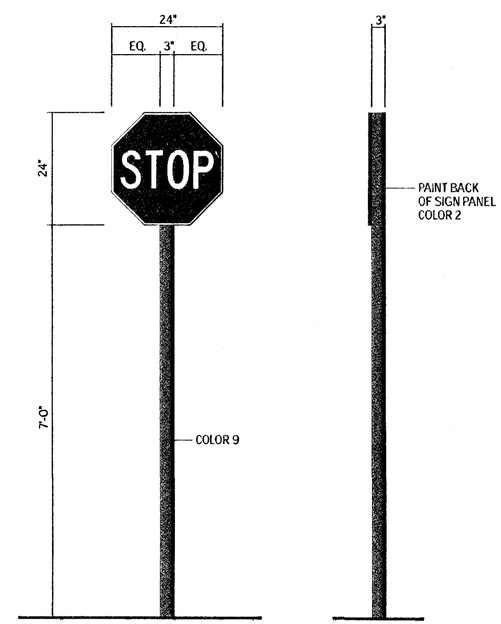

1 G4.1 Sign Type C1

SCALE: 1" = 1'-0"

Freestanding traffic control sign. Painted aluminum post with a mechanically fastened 0.125" aluminum plate "STOP" sign. (Hawkins & Hawkins HR1 or Western Highway R1R) Paint back of sign panel.

FIELD PAOLI

Architecture
1045 Sansome St.
Suite 206
San Francisco
California, 94111
Tel. 415. 788. 6606
Fax 415. 788. 6650

SARATOGA LIBRARY

13650 Saratoga Avenue
Saratoga, California 95070

DONNELLY DESIGN
Environmental Graphic Design
167 Main Street
Rio Vista, CA 94571
707 374-2334
fax 374-2144
mailroom@donnellydesign.com

©2001

DATE OCTOBER 26, 2001

REVISIONS

CONSTRUCTION DOCUMENTS
BID SET

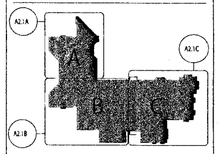

SCALE

DRAWN BY

CHECKED BY

JOB NO.

EXTERIOR SIGN TYPE DRAWINGS

SHEET NO. **G4.1**

All drawings and written material appearing herein constitute the original and unpublished work of the architect and the same may not be duplicated, used, or disclosed without the written consent of the architect ©Field Paoli

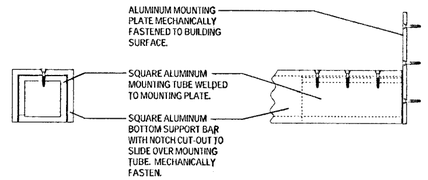

4 / G4.2 Section
NOT TO SCALE

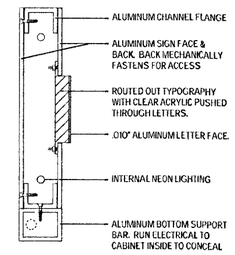

3 / G4.2 Section
NOT TO SCALE

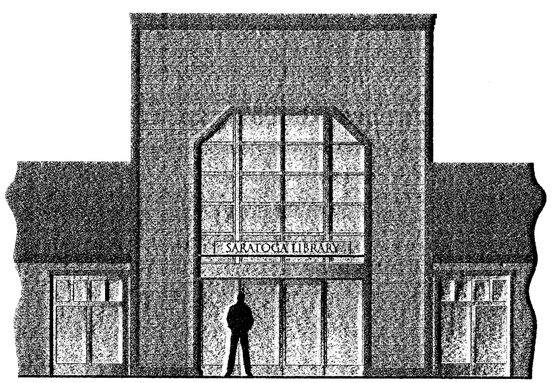

2 / G4.2 Sign Type Elevation B1
SCALE: 1/4" = 1'-0"

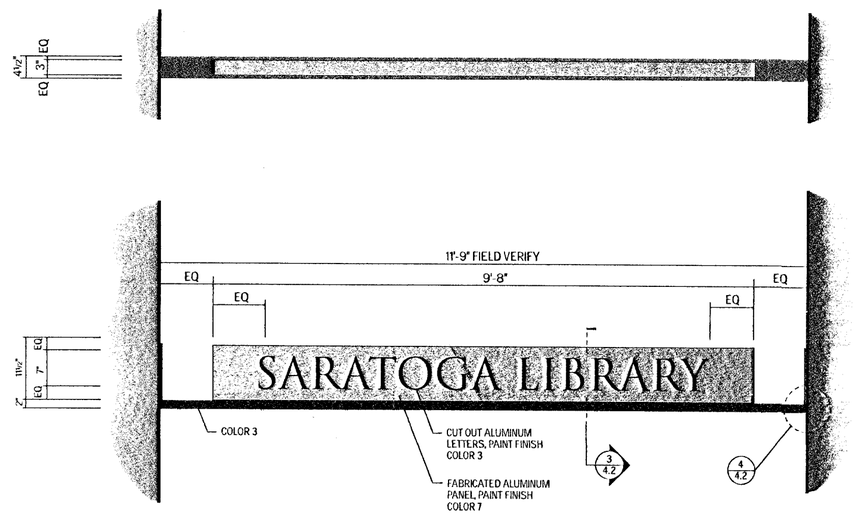

1 / G4.2 Sign Type B1
SCALE: 1" = 1'-0"

Internally illuminated building identification sign. Fabricated aluminum panel and support bar. Graphics are mechanically fastened fabricated aluminum letters with paint finish.

FIELD PAOLI

Architecture
1045 Sansome St.
Suite 206
San Francisco
California, 94111
Tel. 415. 788. 6606
Fax 415. 788. 6650

SARATOGA LIBRARY

13650 Saratoga Avenue
Saratoga, California 95070

DONNELLY DESIGN
Environmental Graphic Design
167 Main Street
Rio Vista, CA 94571
707 374-2334
fax 374-2144
mailroom@donnellydesign.com

© 2001

DATE OCTOBER 26, 2001

REVISIONS

CONSTRUCTION DOCUMENTS
BID SET

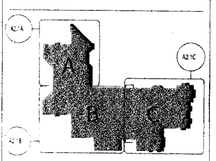

SCALE
DRAWN BY
CHECKED BY
JOB NO.

EXTERIOR SIGN TYPE DRAWINGS

SHEET NO. **G4.2**

All drawings and written material appearing herein constitute the original and unpublished work of the architect and the same may not be duplicated, used, or disclosed without the written consent of the architect ©Field Paoli

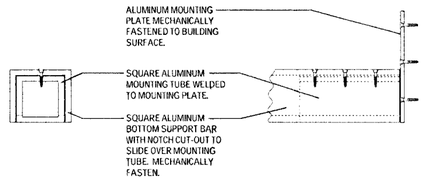

4 / G4.2 Section
NOT TO SCALE

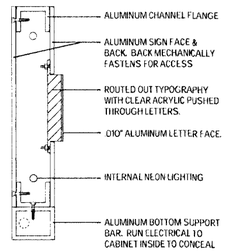

3 / G4.2 Section
NOT TO SCALE

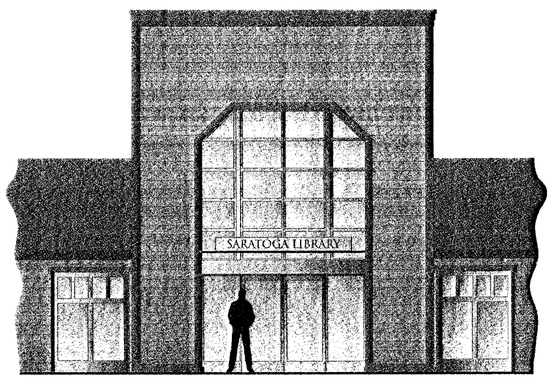

2 / G4.2 Sign Type Elevation B1
SCALE: 1/4" = 1'-0"

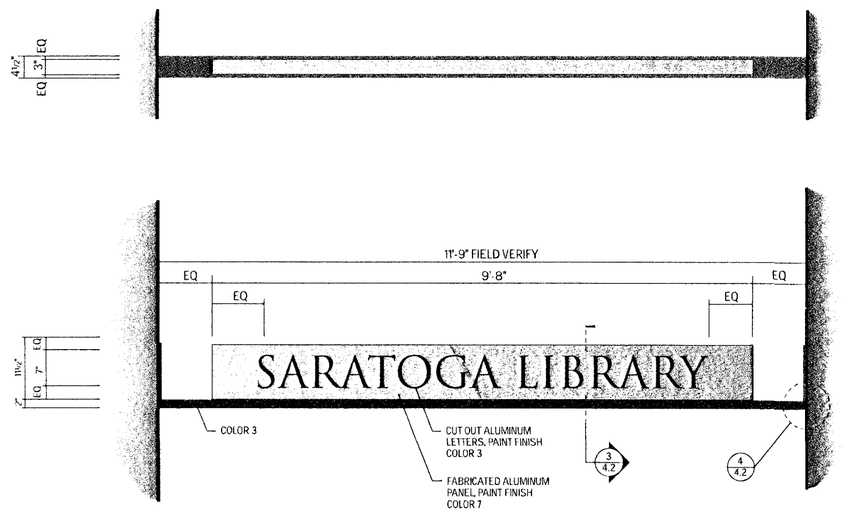

1 / G4.2 Sign Type B1
SCALE: 1" = 1'-0"

Internally illuminated building identification sign. Fabricated aluminum panel and support bar. Graphics are mechanically fastened fabricated aluminum letters with paint finish.

FIELD PAOLI

Architecture
1045 Sansome St.
Suite 206
San Francisco
California, 94111
Tel. 415. 788. 6606
Fax 415. 788. 6650

SARATOGA LIBRARY

SANTA CLARA COUNTY LIBRARY

13650 Saratoga Avenue
Saratoga, California 95070

DONNELLY DESIGN
Environmental Graphic Design
167 Main Street
Rio Vista, CA 94571
707 374-2334
fax 374-2144
maidsoon@donnellydesign.com

©2001

DATE OCTOBER 26, 2001

REVISIONS

CONSTRUCTION DOCUMENTS
BID SET

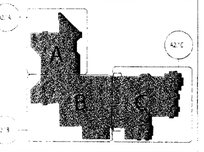

SCALE
DRAWN BY
CHECKED BY
JOB NO.

EXTERIOR SIGN TYPE DRAWINGS

SHEET NO **G4.2**

All drawings and written material appearing herein constitute the original and unpublished work of the architect and the same may not be duplicated, used, or disclosed without the written consent of the architect. ©Field Paoli