CITY OF SARATOGA

13777 FRUITVALE AVENUE • SARATOGA, CALIFORNIA 95070 • (408) 868-1200

Incorporated October 22, 1956

COUNCIL MEMBERS:
Manny Cappello
Jill Hunter
Emily Lo
Howard Miller
Chuck Page

ATTENTION BIDDER

March 20, 2012

RE: Saratoga Village Pedestrian Enhancement Street Light Work Contract (Federal Project CML-5332(018))

Bidder:

Please read and understand all documents and forms prior to bidding. See Information for Bidders (Page 10) and Bidders' Checklist (page 86) for documents contractors are to submit with their bids. Bidders must submit forms Exhibit 15-G (1) and Exhibit 15-H information regarding Underutilized Disadvantage Business Enterprises (UDBE) commitment and effort with its bid package on bid opening day. The UDBE goal for this project is 3.05%. The City of Saratoga has elected to make this information a material part of the bid, and bidders that fail to include this information on the correct form will be deemed non-responsive and not eligible for award of the contract.

Scope of Work

The City of Saratoga will be installing 95 new Hapco Pedestal Poles and Philips Hadco LED street light fixtures (see appendix A). The location of the installation is at the Saratoga Village along Big Basin Way as illustrated on the map on appendix A.

Existing City Street Light Poles:

There is 35 locations which the City owns the existing street light poles and light fixtures. The Contractor shall remove the existing street light poles and light fixtures. The Contractor shall dispose of the all waste generated by the process of the project by the Waste Management Plan on Appendix B. The contractor is responsible to purchase the new street light poles and install them on the existing street light concrete pole bases. The Contractor will install the City supplied new LED street light fixtures. The contractor will be responsible to transfer all banner hardware from the existing street light poles to the new street light poles and this will be included in the bid item to install the City supplied new LED street light fixtures. The contractor will be responsible to pick up and bring to the job site the new LED street light fixtures from the City's vendor Electrical Distributors Company located at 365 Race Street, San Jose Ca 95125 (408) 293-5818 (Contact Juan Pineda) at no extra cost to the City. The Contractor shall connect the new or existing (pending of the existing condition) electrical wires to the point electrical connection at the adjacent electrical pull boxes. The Contractor shall schedule work so that there are no street light poles and street light fixtures out longer than a contractors working day shift. Contractor shall remove and install the street light poles and street light fixtures the same working day.

At these 35 locations the Contractor will be responsible for:

1. Provide Traffic Control

2. Remove existing City owned street light pole and light fixture.

3. Pick up the City owned new LED street light fixtures from the City's vendor Electrical Distributors Company.

4. Provide and install new street light pole to existing bases.

5. Install City owned new LED street light fixtures to new street light poles.

6. Transfer all banner hardware from the existing street light poles to the new street light poles.

7. Connect new or existing (pending of the existing condition) electrical wires to the point electrical connection at the adjacent electrical pull boxes.

8. Dispose of the all waste generated by the process of the project by the Waste Management Plan on Appendix B.

Existing PG&E Street Light Poles:

There is 60 locations which PG&E owns the existing street light poles and light fixtures. PG&E shall remove the existing street light poles, light fixtures and all electrical wires (from existing conduit).

The contractor is responsible to purchase the new street light poles and install them on the existing street light concrete pole bases. The Contractor will install the City supplied new LED street light fixtures. The contractor will be responsible to transfer all banner hardware from the existing street light poles to the new street light poles and this will be included in the bid item to install the City supplied new LED street light fixtures. The contractor will be responsible to pick up and bring to the job site the new LED street light fixtures from the City's vendor Electrical Distributors Company located at 365 Race Street, San Jose Ca 95125 (408) 293-5818 (Contact Juan Pineda) at no extra cost to the City. The Contractor shall install and pull new electrical wire (10 gage) in the existing conduits and connect the new electrical wires to the point electrical connection (as determined by PG&E), at the adjacent electrical pull boxes and the existing meter boxes.

The City, Contractor and PG&E shall coordinate schedules so that once PG&E removes a street light pole the Contractor shall install the new street light pole and new LED street light fixture

the same working day. PG&E has approximated to remove between 5 and 10 street light poles a day. The Contractor shall schedule work so that there are no street light poles and street light fixtures out longer than a contractors working day shift. Contractor shall install the street light poles and street light fixtures the same working day it is removed by PG&E.

At these 60 locations the Contractor will be responsible for:

1. Provide Traffic Control

2. Pick up the City owned new LED street light fixtures from the City's vendor Electrical Distributors Company.

3. Provide and install new street light pole to existing bases.

4. Install City owned new LED street light fixtures to new street light poles.

5. Transfer all banner hardware from the existing street light poles to the new street light poles.

6. The Contractor shall install and pull new electrical wire (10 gage) in the existing conduits and connect the new electrical wires to the point electrical connection (as determined by PG&E), at the adjacent electrical pull boxes and the existing meter boxes.

Add Alternatives to Bid:

In the event that PG&E is unable to relinquish their existing conduit and concrete pole bases to the City at the time of Contract Award at the 60 locations which PG&E owns the existing street light poles and light fixtures. The City has added add alternatives to the bid. Prior to commencement of work, the Contractor shall apply and obtain a Department of Transportation (Caltrans) Construction Encroachment Permit.

Contractor shall apply for the Caltrans Construction Encroachment Permit within 10 days after the Notice of Award. Contractor shall comply with all the provisions of the Caltrans permit. Contractor shall be responsible for all costs associated with the Caltrans Construction Encroachment Permit. Contractor shall not commence work without a Caltrans Construction Encroachment Permit.

Contractor shall assume that Caltrans will require a payment of $3,000 to issue the Caltrans Construction Encroachment Permit. This cost is payable upon the submission of the application. Full compensation for conforming to the requirements of this section, including the payment to Caltrans, is included in the prices paid for the various items of work shown on the add alternative bid form and no additional compensation will be made therefore.

The Contractor shall provide a design by a California License Electrical Engineer and approved by the City's Engineer. The design shall consist but not limited to providing an electrical parallel

connection, layout of new conduit on the street (just off the lip of gutter), electrical pull box locations, point of connection to electrical power as determined by PG&E and to existing meters. There are two meters, one on 3rd Street (Turkey Track adjacent to PG&E pole number 17375) and the second at Blaney Plaza (adjacent to PG&E pole number 17417). The design cost is included in the prices paid for the various items of work shown on the add alternative bid form and no additional compensation will be made therefore.

The Contractor shall provide the additional required traffic control for the added work in the street. The additional traffic control is included in the prices paid for the various items of work shown on the add alternative bid form and no additional compensation will be made therefore.

The Contractor will be responsible to saw cut or rock wheel a trench, place 2 inch PVC schedule 40 conduit and back fill trench and repave the street per City of Saratoga Restoration Of Utility Excavations (see detail in Appendix A). The trench that will be required at 3rd Street (Turkey Track adjacent to PG&E pole number 17375) will require in addition to remove and restore the existing pavers. Any new conduit that will be required to cross existing crosswalks will have to be bored underneath the crosswalks.

Measurement and Payment:
The contract add alternative price paid per lineal foot of installing 2 inch PVC schedule 40 conduit shall include full compensation for furnishing all labor, materials, tools, equipment and incidentals and for doing all worked involved in saw cut or rock wheel a trench, place 2 inch PVC schedule 40 conduit and back fill trench and repave the street per City of Saratoga Restoration Of Utility Excavations (see detail in Appendix A), in addition to remove and restore the existing pavers, bore underneath the crosswalks.

The Contractor will be responsible to remove and replace concrete sidewalk for the installation of the new street light pole concrete bases. If required for the purpose of installing the conduit laterals from the street to the sidewalk, the Contractor will be responsible to remove and replace the concrete vertical curb and gutter. The Contractor will be responsible to install new street light pole concrete bases. The Contractor will be responsible to install the new electrical pull boxes adjacent to the new street light pole concrete bases.

Measurement and Payment:
The contract price paid per lineal foot for curbs and gutters, each new street light pole concrete bases, each new electrical pull boxes and square foot for sidewalks, ramps and driveway approaches shall include full compensation for furnishing all labor, materials, tools, equipment and incidentals and for doing all worked involved in construction the curbs and gutters, street light pole concrete bases, new electrical pull boxes and square foot for sidewalks, ramps and driveway approaches, complete in place, including concrete, aggregate base, excavation, and backfill.

The Contractor will be responsible to install and pull new electrical wire (10 gage) in the new conduits and connect the new electrical wires to the point electrical connection (as determined by PG&E), at the adjacent electrical pull boxes and the existing meter boxes. The payment shall be the same from the base bid to install and pull new electrical wire (10 gage).

At these 60 locations the Contractor will be responsible for:

1. Provide Traffic Control

2. Pick up the City owned new LED street light fixtures from the City's vendor Electrical Distributors Company.

3. Provide and install new street light pole to new bases.

4. Install City owned new LED street light fixtures to new street light poles.

5. Transfer all banner hardware from the existing street light poles to the new street light poles.

6. The Contractor shall install and pull new electrical wire (10 gage) in the new conduits and connect the new electrical wires to the point electrical connection (as determined by PG&E), at the adjacent new electrical pull boxes and the existing meter boxes.

Add Alternatives

7. Contractor shall apply and obtain a Department of Transportation (Caltrans) Construction Encroachment Permit.

8. Saw cut or rock wheel a trench, place 2 inch PVC schedule 40 conduit and back fill trench and repave the street per City of Saratoga Restoration Of Utility Excavations (see detail in Appendix A).

9. Remove and replace vertical curb and gutter.

10. Remove and replace concrete sidewalk.

11. Install electrical pull boxes.

12. Install street light pole concrete bases.

The Engineering Estimate for the Base Bid is $197,000 and the Add Alternative is $216,000 for a total of $413,000.

Should you have any questions about this, please give me a call at (408) 868-1218.

Sincerely,

Macedonio Nunez, P.E.
Associate Engineer
City of Saratoga
mnunez@saratoga.ca.us

cc: John Cherbone, Public Works Director

CITY OF SARATOGA

CONTRACT DOCUMENTS

FOR

SARATOGA VILLAGE PEDESTRIAN ENHANCEMENT STREET LIGHT WORK PROJECT

FEDERAL PROJECT ID: CML 5332(018)

KEY BID DATES (For informational purposes only, subject to change without notice)

KEY BID DATES

Date Issued ……..March 20th, 2012

Requests for Equals/Clarifications Due ……April 3rd, 2012

Bids Due……..April 10th, 2012

Council Award ……April 18th, 2012

Notice to Proceed……..April 30th, 2012

CITY OF SARATOGA
SARATOGA VILLAGE PEDESTRIAN ENHANCEMENT STREET LIGHT WORK PROJECT

Table of Contents

NOTICE INVITING BIDS 3

SCOPE AND LOCATION OF WORK 5
INSPECTION OF WORK SITE 9
EXAMINATION OF CONTRACT DOCUMENTS 10
REPORT OF ERRORS AND OMISSIONS 10
INTERPRETATION OF CONTRACT DOCUMENTS 10
BIDS 10
ADDENDA 12
BID PRICES 12
TAXES 12
EXPERIENCE OF BIDDERS 12
LISTS OF SUBCONTRACTORS 13
BID GUARANTY 13
MODIFICATION OF BID 13
POSTPONEMENT OF OPENING 9
NON COLLUSION AFFIDAVIT 10
DISQUALIFICATION OF BIDDER 14
REJECTION OF BIDS 14
RELIEF OF BIDDERS 14
COMPLETING AND SIGNING FORMS 14
DEBARRED CONTRACTORS AND SUBCONTRACTORS 15
PRIOR APPROVAL OF SUBSTITUTIONS ("APPROVED EQUALS") 15
PREVAILING WAGE AND APPRENTICESHIP 15
BID PROTEST PROCEDURES 16
SECTION GC-1 DEFINITIONS AND TERMS 18
SECTION GC-2 BID REQUIREMENTS AND CONDITIONS 19
SECTION GC-3 AWARD AND EXECUTION OF CONTRACT 20
SECTION GC-4 SCOPE OF WORK 22
SECTION GC-5 CONTROL OF WORK 23
SECTION GC-6 CONTROL OF MATERIALS 27
SECTION GC-7 LEGAL RELATIONS AND RESPONSIBILITY 29
SECTION GC-8 PROSECUTION AND PROGRESS 42
SECTION GC-9 MEASUREMENT AND PAYMENT 46
SECTION GC-10 DUST CONTROL 49
SECTION GC-11 RESERVED 49
SECTION GC-12 DIFFERING SITE CONDITIONS 49
SECTION GC-13 ARCHAEOLOGICAL EXAMINATION 50

UNCONDITIONAL WAIVER AND RELEASE UPON PROGRESS PAYMENT 53

UNCONDITIONAL WAIVER AND RELEASE UPON FINAL PAYMENT 54

SPECIAL CONDITIONS 55

CONTRACT FOR CONSTRUCTION 79

REQUIRED CERTIFICATION 85

BIDDERS CHECKLIST 86

SUCCESSFUL BIDDER CHECKLIST..... 86

CONTRACTOR'S CERTIFICATE REGARDING WORKER'S COMPENSATION 87

STATE AND FEDERAL CONTRACT REQUIREMENTS & CONDITIONS……...99 - 108

LOCAL AGENCY BIDDER-UDBE COMMITMENT (CONSTRUCTION CONTRACTS) – INFORMATION (LOCAL ASSISTANCE PROCEDURES MANUAL – Exhibit 15-G (1))……...115

LOCAL AGENCY BIDDER-DBE INFORMATION (CONSTRUCTION CONTRACTS) INFORMATION (LOCAL ASSISTANCE PROCEDURES MANUAL – Exhibit 15-G (2))……...119

DISADVANTAGE BUSINESS ENTERPRISES (DBE) CERTIFICATION STATUS CHANGE (LOCAL ASSISTANCE PROCEDURES MANUAL – EXHIBIT 17-O)……122

EXHIBIT 15-H UDBE INFORMATION-GOOD FAITH EFFORTS (LOCAL ASSISTANCE PROCEDURES MANUAL – EXHIBIT 15-H)……125

FINAL REPORT UTILIZATION OF DISADVANTAGE BUSINESSES (LOCAL ASSISTANCE PROCEDURES MANUAL – EXHIBIT 17-F)……...129

BIDDER'S LIST (49 CFR, Part 26.11) (LOCAL ASSISTANCE PROCEDURES MANUAL – EXHIBIT 12-G)……..132

FEDERAL CONTRACT PROVISIONS……...135 –148

FEDERAL WAGE DECISION……..149 –190

ATTACHMENTS:

SCOPE OF WORK

TECHNICAL SPECIFICATIONS

APPENDIX A: LOCATION MAP, LIMITS OF PROJECT and CONSTRUCTION DETAILS

APPENDIX B: Waste Management Plan

Note:

Bidders must submit forms Exhibit 15-G (1) and Exhibit 15-H information regarding UDBE commitment with its bid package on bid opening day. The City of Saratoga has elected to make this information a material part of the bid, and bidders that fail to include this information on the correct form will be deemed non-responsive and not eligible for award of the contract

NOTICE INVITING BIDS

SARATOGA VILLAGE PEDESTRIAN ENHANCEMENT STREET LIGHT POLE WORK PROJECT
FEDERAL PROJECT ID: CML-5332(018)

SEALED BIDS will be received by the CITY OF SARATOGA (CITY) until **April 10th, 2012 at 10:00 am** for the **SARATOGA VILLAGE PEDESTRIAN ENHANCEMENT STREET LIGHT WORK PROJECT**. Sealed bids shall be submitted addressed and noted as follows:

John Cherbone, Public Works Director
City of Saratoga
13777 Fruitvale Ave.
Saratoga, CA 95070

Sealed Bid for SARATOGA VILLAGE PEDESTRIAN ENHANCEMENT STREET LIGHT WORK PROJECT: CML-5332(018)

All bids must be accompanied by bidder's security in accordance with California Public Contract Code Sections 20170 et seq.

Following the closure of the bid submittal period, bids will be publicly opened and read for performing work as follows:

Furnishing all labor, equipment, and performing all work necessary and incidental to the construction of the project known as **SARATOGA VILLAGE PEDESTRIAN ENHANCEMENT STREET LIGHT WORK PROJECT** according to drawings and specifications as prepared by City of Saratoga and according to the Contract Documents. The work to be done consists of supplying all labor, methods or processes, implements, tools, machinery, and equipment to install asphalt overlays, striping and other work not specifically mentioned herein, but which may be required as directed by CITY or its designated representative.

CITY hereby notifies all Bidders that this project is federally funded, and particular attention should be paid to the Federal and State requirements for construction. All required Federal and State required information must be provided in order for the bid to be considered conforming. These sections are located in the back portion of the bid documents. The Underutilized Disadvantage Business Enterprises (UDBEs) goal for this project is 3.05%.

Project is to be completed within 40 working days from the date specified in the Notice to Proceed. The Contractor shall pay to the City of Saratoga the sum of three hundred dollars ($300.00) for

each and every calendar day's delay in finishing the work in excess of the calendar day completion time.

Bidders may obtain copies of the bidding documents at the Saratoga Public Works Department; Phone: (408) 868-1239. There is no charge for the bid documents for this project. Send requests for project drawings and specifications to City of Saratoga; 13777 Fruitvale Avenue; Saratoga, California 95070; Attn: Public Works Director**.**

Pursuant to California Labor Code Section 1771, the successful bidder and all subcontractors shall pay not less than the prevailing rate of per diem wages as determined by the Director of the California Department of Industrial Relations. Copies of such prevailing rate of per diem wages are available for view at the City of Saratoga Department of Public Works.

Pursuant to California Public Contract Code Section 22300, the Contractor may, at its option, choose to substitute securities for monies earned by the Contractor and retained by CITY to ensure the performance of the Contract.

Pursuant to California Public Contract Code Section 3300, City has determined that the Contractor shall possess a valid General Engineering Contractor License at the time that the bid is submitted. Failure to possess the specified license shall render the bid non-responsive.

The successful bidder will be required to furnish a payment bond in the amount equal to one hundred percent (100%) of the Contract Price, as well as a faithful performance bond, in the amount equal to one hundred percent (100%) of the Contract Price. The bonds shall be on the forms included in the Contract Documents.

The successful bidder shall insure that employees and applicants for employment are not discriminated against on the basis of age, color, race, national origin, ancestry, religion, sex, sexual preference, or marital status, and shall comply with the Americans with Disabilities Act.

Bids will be examined and reported to the City of Saratoga City Council (Council) at a meeting within thirty (30) days of the bid opening. CITY reserves the right to reject any and all bids, or to waive any irregularities or informalities in any bid or in the bidding procedure, or to postpone the bid opening or award for good cause. No Bidder may withdraw its bid for a period of five calendar days after the date of opening of the bids. Each bidder will be notified of award of contract, if award is made. Contract Documents, Forms of Bid and any questions concerning this bid should be addressed to Public Works Director, City of Saratoga, (408) 868-1239.

CITY OF SARATOGA
Office of the Clerk
March 20th, 2012

INFORMATION FOR BIDDERS
SARATOGA VILLAGE PEDESTRIAN ENHANCEMENT STREET LIGHT WORK PROJECT

SCOPE AND LOCATION OF WORK

The work to be performed under this contract consists of the furnishing of all labor, materials, plant, equipment and services for the construction of the Project, complete, and in satisfactory operating condition, all as shown on the Contract Documents and/or as specified herein. The work is to be performed in the City of Saratoga, County of Santa Clara.

The City of Saratoga will be installing 95 new Hapco Pedestal Poles and Philips Hadco LED street light fixtures (see appendix A). The location of the installation is at the Saratoga Village along Big Basin Way as illustrated on the map on appendix A.

Existing City Street Light Poles:

There is 35 locations which the City owns the existing street light poles and light fixtures. The Contractor shall remove the existing street light poles and light fixtures. The Contractor shall dispose of the all waste generated by the process of the project by the Waste Management Plan on Appendix B. The contractor is responsible to purchase the new street light poles and install them on the existing street light concrete pole bases. The Contractor will install the City supplied new LED street light fixtures. The contractor will be responsible to transfer all banner hardware from the existing street light poles to the new street light poles and this will be included in the bid item to install the City supplied new LED street light fixtures. The contractor will be responsible to pick up and bring to the job site the new LED street light fixtures from the City's vendor Electrical Distributors Company located at 365 Race Street, San Jose Ca 95125 (408) 293-5818 (Contact Juan Pineda) at no extra cost to the City. The Contractor shall connect the new or existing (pending of the existing condition) electrical wires to the point electrical connection at the adjacent electrical pull boxes. The Contractor shall schedule work so that there are no street light poles and street light fixtures out longer than a contractors working day shift. Contractor shall remove and install the street light poles and street light fixtures the same working day.

At these 35 locations the Contractor will be responsible for:

1. Provide Traffic Control

2. Remove existing City owned street light pole and light fixture.

3. Pick up the City owned new LED street light fixtures from the City's vendor Electrical Distributors Company.

4. Provide and install new street light pole to existing bases.

5. Install City owned new LED street light fixtures to new street light poles.

6. Transfer all banner hardware from the existing street light poles to the new street light poles.

7. Connect new or existing (pending of the existing condition) electrical wires to the point electrical connection at the adjacent electrical pull boxes.

8. Dispose of the all waste generated by the process of the project by the Waste Management Plan on Appendix B.

Existing PG&E Street Light Poles:

There is 60 locations which PG&E owns the existing street light poles and light fixtures. PG&E shall remove the existing street light poles, light fixtures and all electrical wires (from existing conduit).

The contractor is responsible to purchase the new street light poles and install them on the existing street light concrete pole bases. The Contractor will install the City supplied new LED street light fixtures. The contractor will be responsible to transfer all banner hardware from the existing street light poles to the new street light poles and this will be included in the bid item to install the City supplied new LED street light fixtures. The contractor will be responsible to pick up and bring to the job site the new LED street light fixtures from the City's vendor Electrical Distributors Company located at 365 Race Street, San Jose Ca 95125 (408) 293-5818 (Contact Juan Pineda) at no extra cost to the City. The Contractor shall install and pull new electrical wire (10 gage) in the existing conduits and connect the new electrical wires to the point electrical connection (as determined by PG&E), at the adjacent electrical pull boxes and the existing meter boxes.

The City, Contractor and PG&E shall coordinate schedules so that once PG&E removes a street light pole the Contractor shall install the new street light pole and new LED street light fixture the same working day. PG&E has approximated to remove between 5 and 10 street light poles a day. The Contractor shall schedule work so that there are no street light poles and street light fixtures out longer than a contractors working day shift. Contractor shall install the street light poles and street light fixtures the same working day it is removed by PG&E.
At these 60 locations the Contractor will be responsible for:

1. Provide Traffic Control

2. Pick up the City owned new LED street light fixtures from the City's vendor Electrical Distributors Company.

3. Provide and install new street light pole to existing bases.

4. Install City owned new LED street light fixtures to new street light poles.

5. Transfer all banner hardware from the existing street light poles to the new street light poles.

6. The Contractor shall install and pull new electrical wire (10 gage) in the existing conduits and connect the new electrical wires to the point electrical connection (as determined by PG&E), at the adjacent electrical pull boxes and the existing meter boxes.

Add Alternatives to Bid:

In the event that PG&E is unable to relinquish their existing conduit and concrete pole bases to the City at the time of Contract Award at the 60 locations which PG&E owns the existing street light poles and light fixtures. The City has added add alternatives to the bid. Prior to commencement of work, the Contractor shall apply and obtain a Department of Transportation (Caltrans) Construction Encroachment Permit.

Contractor shall apply for the Caltrans Construction Encroachment Permit within 10 days after the Notice of Award. Contractor shall comply with all the provisions of the Caltrans permit. Contractor shall be responsible for all costs associated with the Caltrans Construction Encroachment Permit. Contractor shall not commence work without a Caltrans Construction Encroachment Permit.

Contractor shall assume that Caltrans will require a payment of $3,000 to issue the Caltrans Construction Encroachment Permit. This cost is payable upon the submission of the application. Full compensation for conforming to the requirements of this section, including the payment to Caltrans, is included in the prices paid for the various items of work shown on the add alternative bid form and no additional compensation will be made therefore.

The Contractor shall provide a design by a California License Electrical Engineer and approved by the City's Engineer. The design shall consist but not limited to providing an electrical parallel connection, layout of new conduit on the street (just off the lip of gutter), electrical pull box locations, point of connection to electrical power as determined by PG&E and to existing meters. There are two meters, one on 3rd Street (Turkey Track adjacent to PG&E pole number 17375) and the second at Blaney Plaza (adjacent to PG&E pole number 17417). The design cost is included in the prices paid for the various items of work shown on the add alternative bid form and no additional compensation will be made therefore.

The Contractor shall provide the additional required traffic control for the added work in the street. The additional traffic control is included in the prices paid for the various items of work shown on the add alternative bid form and no additional compensation will be made therefore.

The Contractor will be responsible to saw cut or rock wheel a trench, place 2 inch PVC schedule 40 conduit and back fill trench and repave the street per City of Saratoga Restoration Of Utility Excavations (see detail in Appendix A). The trench that will be required at 3rd Street (Turkey Track adjacent to PG&E pole number 17375) will require in addition to remove and restore the existing pavers. Any new conduit that will be required to cross existing crosswalks will have to be bored underneath the crosswalks.

Measurement and Payment:
The contract add alternative price paid per lineal foot of installing 2 inch PVC schedule 40 conduit shall include full compensation for furnishing all labor, materials, tools, equipment and incidentals and for doing all worked involved in saw cut or rock wheel a trench, place 2 inch PVC schedule 40 conduit and back fill trench and repave the street per City of Saratoga Restoration Of Utility Excavations (see detail in Appendix A), in addition to remove and restore the existing pavers, bore underneath the crosswalks.

The Contractor will be responsible to remove and replace concrete sidewalk for the installation of the new street light pole concrete bases. If required for the purpose of installing the conduit laterals from the street to the sidewalk, the Contractor will be responsible to remove and replace the concrete vertical curb and gutter. The Contractor will be responsible to install new street light pole concrete bases. The Contractor will be responsible to install the new electrical pull boxes adjacent to the new street light pole concrete bases.

Measurement and Payment:
The contract price paid per lineal foot for curbs and gutters, each new street light pole concrete bases, each new electrical pull boxes and square foot for sidewalks, ramps and driveway approaches shall include full compensation for furnishing all labor, materials, tools, equipment and incidentals and for doing all worked involved in construction the curbs and gutters, street light pole concrete bases, new electrical pull boxes and square foot for sidewalks, ramps and driveway approaches, complete in place, including concrete, aggregate base, excavation, and backfill.

The Contractor will be responsible to install and pull new electrical wire (10 gage) in the new conduits and connect the new electrical wires to the point electrical connection (as determined by PG&E), at the adjacent electrical pull boxes and the existing meter boxes. The payment shall be the same from the base bid to install and pull new electrical wire (10 gage).
At these 60 locations the Contractor will be responsible for:

1. Provide Traffic Control

2. Pick up the City owned new LED street light fixtures from the City's vendor Electrical Distributors Company.

3. Provide and install new street light pole to new bases.

4. Install City owned new LED street light fixtures to new street light poles.

5. Transfer all banner hardware from the existing street light poles to the new street light poles.

6. The Contractor shall install and pull new electrical wire (10 gage) in the new conduits and connect the new electrical wires to the point electrical connection (as determined by PG&E), at the adjacent new electrical pull boxes and the existing meter boxes.

Add Alternatives

7. Contractor shall apply and obtain a Department of Transportation (Caltrans) Construction Encroachment Permit.

8. Saw cut or rock wheel a trench, place 2 inch PVC schedule 40 conduit and back fill trench and repave the street per City of Saratoga Restoration Of Utility Excavations (see detail in Appendix A).

9. Remove and replace vertical curb and gutter.

10. Remove and replace concrete sidewalk.

11. Install electrical pull boxes.

12. Install street light pole concrete bases.

INSPECTION OF WORK SITE

Bidders are required to inspect the site of the work in order to satisfy themselves, by personal examination or by such other means as they may prefer, of the location of the proposed work and the actual conditions of and at the site. Bidders may apply to the Director of Public Works for additional information and explanation before submitting bids. However, no supplemental information requested or furnished shall vary the terms of the Contract Documents or affect the Contractor's sole responsibility to satisfy itself as to the conditions of the work to be performed. No claim for additional compensation will be allowed which is based upon a lack of knowledge of the actual conditions or location of the Work.

Submission of a bid by the bidder shall constitute acknowledgment that, if awarded the contract, the bidder has relied and is relying on its own examination of (a) the site of the work; (b) access to the site; (c) all other data, matters, and things requisite to the fulfillment of the work, including but not limited to the availability of labor and materials; and (d) its own knowledge of existing facilities on and in the vicinity of the site of the Project and not on any representation or warranty by City or its agents of the above items. Removal, relocation, or

protection of existing public utilities not identified by City shall be done in conformance with California Government Code Section 4215.

EXAMINATION OF CONTRACT DOCUMENTS

Each bidder shall thoroughly examine and be familiar with legal and procedural documents, general conditions, specifications, drawings and addenda (if any). Submission of a bid shall constitute acknowledgment, upon which City may rely, that the bidder has thoroughly examined and is familiar with the Contract Documents. Failure or neglect of a bidder to receive or examine any of the Contract Documents shall in no way relieve the bidder of any obligation with respect to its bid or to the Contract. No claim for additional compensation will be allowed which is based upon a lack of knowledge of any Contract Documents.

REPORT OF ERRORS AND OMISSIONS

Bidder shall review architectural and/or engineering plans and specifications, if any, prior to submission of the bid, and report any errors and omissions noted by the bidder to the Director of Public Works. The review by the Contractor shall be confined to the Contractor's capacity as a contractor, and not as a licensed design professional.

INTERPRETATION OF CONTRACT DOCUMENTS

No oral representation or interpretations will be made to any bidders as to the meaning of the Contract Documents. Requests for interpretation shall be made in writing and delivered to the Director of Public Works at least ten (10) working days before the time announced for opening the bids. Interpretations, where necessary, will be made in the form of an addendum to the Contract Documents and, when issued, will be sent as promptly as is practical to all parties to whom the bid documents have been issued. All such addenda shall become part of the Contract.

Requests for information before or after the award of contract shall be directed to:

John Cherbone
Director of Public Works
13777 Fruitvale Avenue, CA 95070
(408) 868-1239; Fax (408) 868-1281

It shall also be the bidder's responsibility to call to the attention of Director of Public Works any missing pages in the Contract Documents, including the addenda. These items shall be brought to the attention of Director of Public Works in writing, at least one week prior to the bid opening date.

BIDS

Bids shall be made on the blank forms prepared by City, which may be removed from the bound Contract Documents. All bids shall include, in the space provided, all information requested, shall be signed by the bidder or an

authorized representative thereof, and shall include the bidder's business address.

Bidders must submit forms Exhibit 15-G (1) and Exhibit 15-H information regarding UDBE commitment with its bid package on bid opening day. The City of Saratoga has elected to make this information a material part of the bid, and bidders that fail to include this information on the correct form will be deemed non-responsive and not eligible for award of the contract.

Bids must be accompanied by security in accordance with California Public Contract Code Sections 20170 et seq.

If the bid is made by an individual, his or her name, signature, and business address shall be shown.

If the bid is made by a firm or partnership, the name and business address of the firm or partnership and the signature of at least one of the general partners shall be shown.
If the bid is made by a corporation, the bid shall show the name of the corporation and the state(s) in which the corporation is incorporated; the name and business address of the corporation's local agent; and the signature of at least one officer authorized to sign on behalf of the corporation. Additionally, the bid shall include a document empowering the signatory or signatories to execute the bid and to bind the corporation.

If the bid is made by a joint venture, the bid shall be signed by at least one of the joint venture firms in a format meeting with the requirements outlined above. Additionally, the bid shall include a document empowering the signatory or signatories to execute the bid and to bind the joint venture.

Every contractor, other than a joint venture, who submits a bid, must at the time the bid is submitted have a California Contractor’s License in good standing. The license shall be in the class or classes specified in the Contract Documents. Any bid from an unlicensed contractor, other than those persons exempt under California Business & Professions Code Section 7028.15, shall be non-responsive and shall be rejected. Section 7028.15 makes it a misdemeanor for any person without a valid contractor’s license (with specified exceptions) to submit a bid to act as a contractor to a public agency. The penalties on a bidder violating these provisions are severe.

Each bid shall be enclosed in a sealed envelope, labeled and delivered to the Director of Public Works at the address above. Bidders are warned against making erasures or alterations of any kind, without initialing each and every such change. Bids that contain uninitialed erasures, alterations or irregularities of any kind, or omissions, may be rejected. No oral, telegraphic, or telephone (including facsimile) bids or modifications will be considered.

Each bidder shall submit with its bid a statement setting forth its experience and qualifications on the forms included in the Contract and Bidding Documents.

Telephones will not be available to bidders for the preparation of the bids or for calling in bid results. Bid forms received after the designated time will not be accepted. Bidders and their authorized agents are invited to attend the bid opening.

No bidder may withdraw its bid for a period of sixty (60) days after the date set for the opening of bids.

City reserves the right to reject any or all bids; to make any awards or any rejections in what it alone considers to be in the best interest of City, and to waive any informalities or irregularities in the bids.

ADDENDA

Each bid shall include specific acknowledgment (in the space provided) of the receipt of all addenda issued during the bidding period. A bidder's failure to acknowledge all addenda may result in the bid being rejected as not responsive.

BID PRICES

Bid prices shall include everything necessary for the completion of construction and fulfillment of the contract, including but not limited to furnishing all transportation, materials, equipment, tools, excavation, utilities, sheeting, shoring, bracing and supports, plant and other facilities, and all management, superintendence, permits, labor and services, except as may be provided otherwise in the Contract Documents.

In the event that the product of a unit price and an estimated quantity does not equal the extended amount quoted, the unit price shall govern and the correct product of the unit price and the estimated quantity shall be deemed to be the amount bid. If the sum of the individual items does not equal the total base price, the individual item totals shall govern and the corrected sum shall be deemed to be the total base bid.

Where there is a conflict between words and figures, the words shall govern and the figures shall be disregarded.

TAXES

Bid prices shall include all applicable federal, state, and local taxes.

EXPERIENCE OF BIDDERS

At the time of bidding, and throughout the period of the contract, each bidder shall be licensed under the provisions of the California Business and Professions Code to do the type of work contemplated for the project. The license classification shall be a Class A or C-10 - General Engineering Contractor (construction) and State of California Professional Engineering License (design).

It is the intention of City to award a contract, if at all, to the lowest responsive responsible bidder who demonstrates the attributes of trustworthiness, as well as quality, fitness (including financial qualifications), capacity and experience to enable it to prosecute the work successfully and properly, and to complete the work within the time period named in the Contract Documents.
To determine the degree of responsibility to be credited to the bidder, City will weigh any evidence that the bidder has performed satisfactorily other contracts of like nature and magnitude, and comparable difficulty and rates of progress, to the Work. City shall have sole discretion to determine what contracts are of like nature and magnitude, and comparable difficulty and rates of progress. City may reject bids from Contractors who cannot satisfactorily prove the experience and qualifications outlined in paragraph 10 hereof.

LISTS OF SUBCONTRACTORS

On the forms provided, each bidder shall list the name and address of each subcontractor to whom the bidder proposes to sublet portions of the work in excess of one-half of one percent of the total amount of the bid or $10,000, whichever is greater. For the purpose of this paragraph, a subcontractor is defined as anyone who contracts with the Contractor to furnish materials and labor or labor only, and/or one who specially fabricates and/or installs a portion of the work or improvement according to detailed drawings contained in the Contract Documents. All listings and subsequent substitutions, if any, shall be done in conformance with the Subletting and Subcontracting Fair Practices Act, California Public Contract Code Section 4100 et seq.

BID GUARANTY

The bid shall be accompanied by a bid guaranty bond duly completed by a corporate surety authorized to conduct business in the State of California payable to the City of Saratoga in the sum of at least ten percent (10%) of the total amount of the bid. The bond shall be on the form included in the Contract Documents. Alternatively, a certified or cashier's check, payable to the City of Saratoga, in the sum of at least ten percent (10%) of the total amount of the bid may be substituted for the bid guaranty bond. The amount payable to the City of Saratoga under the bid guaranty bond, or the certified or cashier's check, as the case may be, shall be forfeited to City as liquidated damages in the case of the failure or neglect of the successful bidder to furnish, execute, and deliver to City the required performance and payment bonds and evidences of insurance, and/or to enter into, execute, and deliver to City the Agreement on the form provided herewith, within ten (10) days after being notified in writing by City that the award has been made.

MODIFICATION OF BID

Modification of a bid already received will be considered only if the modification is received prior to the deadline for receiving bids. All modifications shall be made in writing, executed, and submitted in the same form and manner as the original bid.

POSTPONEMENT OF OPENING

City reserves the right to postpone the date and time for receiving and/or opening of bids at any time prior to the date and time established in the Notice Inviting Bids. Pursuant to Public Contract Code Section 4104.5, the City shall extend the date and time for closing of submission of bids (the "bid deadline") by no less than seventy-two (72) hours in the event that CITY issues any material changes, additions, or deletions to the bidding documents later than seventy-two (72) hours prior to the bid deadline.

NON COLLUSION AFFIDAVIT

California Public Contract Code Section 7106 requires that each bidder execute a Noncollusion Affidavit on all public works contracts. Bidder shall execute the Noncollusion Affidavit included with the Contract Documents and submit it to City with the bid.

DISQUALIFICATION OF BIDDER

If there is a reason to believe that collusion exists among any of the bidders, none of the bids of the participants in such collusion will be considered, and City may choose to reject all bids received.

REJECTION OF BIDS

City reserves the right to reject any bids which are incomplete, obscure, or irregular; any bids which omit a bid on any one or more items for which bids are required; any bids which omit unit prices if unit prices are required; any bids in which unit prices are unbalanced in the opinion of City; any bids accompanied by insufficient or irregular bid guaranty; and any bids from bidders who has been delinquent or unfaithful in any former contract with City. City reserves the right to reject defective bids or to waive technical defects, as the interests of City may require.

RELIEF OF BIDDERS

Attention is directed to the provisions of California Public Contract Code Section 5100, et seq., concerning relief of bidders, and in particular to the requirement therein that if a bidder claims a mistake was made in its bid, the bidder shall give City written notice of the alleged mistake within five (5) calendar days after the opening of the bids, specifying in the notice, in detail, how the mistake occurred.

COMPLETING AND SIGNING FORMS

The Bidder’s attention is directed to the forms included in the Contract Documents, which must be completed and signed. FAILURE TO PROPERLY COMPLETE AND SIGN ANY FORMS MAY BE CAUSE FOR REJECTION OF A BID.

DEBARRED CONTRACTORS AND SUBCONTRACTORS

No contractor or subcontractor who is ineligible to bid or work on, or be awarded, a public works contract under California Labor Code Sections 1777.1 or 1777.7 can bid on, be awarded or perform work as a subcontractor on the Project. The Contractor is prohibited from letting work on the Project to a subcontractor who is ineligible to perform work on a public works project under these sections of the Labor Code.

PRIOR APPROVAL OF SUBSTITUTIONS ("APPROVED EQUALS")

Bidders wishing to obtain prior approval of a substitution for a specified material or system (an "approved equal") shall submit all required documentation in compliance with procedures established in the Contract Documents. Any request for an approved equal must be fully supported with technical data, test results, or other pertinent information as evidence that the substitute offered is equal to or better than the specification requirement.

Prior approval requests must be received by City, in writing, at least ten (10) business days prior to bid deadline. If City determines the requested material or system is equal to that specified, City will notify the Bidders prior to time for submitting bids. City's failure to notify the Bidders of an approved equal shall be deemed a rejection of the requested substitution.

PREVAILING WAGE AND APPRENTICESHIP

In accordance with California Labor Code Section 1771, all contractors and subcontractors on this public work project shall pay not less than current prevailing wage rates as determined by the California Department of Industrial Relations ("DIR"). All contractors and subcontractors on this public work project shall comply with the requirements of California Labor Code Sections 1777.5 and 1777.6 in the employment of apprentices.

Questions regarding general prevailing wage rates should be directed to:

Department of Industrial Relations
Division of Labor Statistics and Research
P.O. Box 420603
San Francisco, CA 94142-0603
Phone: (415) 703-4774

Questions pertaining to apprenticeship crafts should be directed to:

Department of Industrial Relations
Division of Apprenticeship Standards
P.O. Box 420603
San Francisco, CA 94142-0603
Phone: (415) 703-4920
Information is also available at the Department of Industrial Relations' website:
http://www.dir.ca.gov

Any contractor who is awarded a public works contract is not relieved of the obligation to pay prevailing wage rates for any craft or classification not listed in the General Determinations or in any Special Determination. If a contractor intends to use a craft or classification not listed in the General Determinations or existing Special Determinations, he or she must notify CITY no later than forty-five (45) days before the bid deadline and request a Special Determination. If no determination has been made at the time the contract is awarded, the contractor shall pay the prevailing wage rate of the craft or classification most closely related to the craft or classification used.

All prevailing wage rates are subject to modification pursuant to Important Notices issued by the DIR's Division of Labor Statistics and Research and recent union contract negotiations.

BID PROTEST PROCEDURES

These procedures apply to all procurement actions, whether by sealed bid, request for bid or sole source, and regardless of the stage of the procurement process at which the protest is filed.

Any protest relating to the form or content of the bidding or contract documents must be submitted in writing to Public Works Director at 13777 Fruitvale Avenue, Saratoga, CA 95010 no later than ten (10) working days before the bid deadline. Any person who submits a bid shall be deemed to have waived any protest to the form or content of the proposal documents.

Any protest relating to any particular proposal or the award of the contract must be submitted in writing to Public Works Director. The protest must be received no later than ten (10) working days after the basis of protest is known or should have been known, whichever is earlier.

The initial protest document shall contain a complete statement of the basis for the protest.

The protest shall refer to the specific portion(s) of the proposal documents which forms the basis for the protest.

The protest shall include the name, business address and telephone number of the person representing the protesting party.

The party filing the protest shall concurrently transmit a copy of the initial protest document and any attached documentation to all other parties who have a direct financial interest that may be adversely affected by the outcome of the protest. Such parties shall include all other bidders who appear to have a reasonable prospect of receiving an award depending upon the outcome of the protest. The documents shall be transmitted by fax or overnight mail.

The procedure and time limits set forth in this section are mandatory and are the sole and exclusive remedy in the event of protest. Failure to comply with these procedures shall constitute a waiver of any right to further pursue the protest, including filing a Government Code claim or instituting legal proceedings

GENERAL CONDITIONS

SARATOGA VILLAGE PEDESTRIAN ENHANCEMENT STREET LIGHT WORK PROJECT

SECTION GC-1 DEFINITIONS AND TERMS

Whenever in the Contract Documents the following terms are used, the intent and meaning shall be interpreted as follows (unless noted otherwise):

Agreement – the written instruments comprising the complete and integrated contract between the City of Saratoga and the Contractor.

Business day – see "working day" below

Calendar day – a period of twenty-four (24) hours measured from midnight to the next midnight. If not otherwise specified in the Agreement, days shall be presumed to be calendar days.

Caltrans Standard Specifications - Standard Specifications for Construction of Local Streets and Roads issued by the State of California, Department of Transportation, 2006 edition. Any reference therein to a State agency or officer shall be interpreted as if the corresponding City of Saratoga office or officer acting under this contract were so specified. All metric measurements or quantities in the Caltrans Standard Specifications shall be disregarded, and equivalent United States measures used.

Caltrans Standard Plans - Standard Plans for Construction of Local Streets and Roads issued by the State of California, Department of Transportation, current edition. All metric measurements or quantities in the Caltrans Standard Plans shall be disregarded, and equivalent United States measures used.

Contractor – the individual or entity with whom City has entered into the Agreement.

Council - The City of Saratoga City Council, the governing body of the City of Saratoga.

County – Santa Clara County, California.

City – the City of Saratoga.

Engineer – The Director of Public Works of the City of Saratoga, acting either directly or through properly authorized agents, such agents acting within the scope of the particular duties entrusted to them.

Laboratory - The designated laboratory authorized by the City of Saratoga to test materials and work involved in the contract.

Work -
Working day – a period comprising the normal working hours of the day and further defined in Section 8-1.06 ("Time of Completion") of the Caltrans Standard Specifications.

Other terms appearing in the Contract Documents shall have the intent and meaning specified in Section 1 ("Definitions and Terms") of the Caltrans Standard Specifications.

SECTION GC-2 BID REQUIREMENTS AND CONDITIONS

A. APPROXIMATE QUANTITY ESTIMATE

The quantities given in the Notice Inviting Bids and in the bid and contract forms are approximate only, being given as a basis for the comparison of bids, and CITY does not, expressly or by implication, agree that the actual amount of work will correspond therewith, but reserves the right to increase or decrease the amount of any class or portion of the Work, or to omit portions of the Work, as may be deemed necessary or advisable by the Director of Public Works.

B. EXAMINATION OF PLANS, SPECIFICATIONS, CONTRACT, AND SITE OF WORK

The bidder shall examine carefully the site of work contemplated and all Contract Documents, including all bid and contract forms incorporated by reference therein. The submission of a bid shall be conclusive evidence that the bidder has investigated and is satisfied as to the conditions to be encountered, as to the character, quality, and scope of work to be performed, the quantities of materials to be furnished, and as to the requirements of the bid, plans, specifications, and the contract. If, during the course of its examination, a bidder finds facts or conditions which appear to be in conflict with the letter or spirit of the project plans and specifications, the bidder shall contact CITY for additional information and explanation before submitting its bid. Any request for information must be submitted at least ten (10) working days before the time announced for opening the bids, if any.

C. QUESTIONS DURING BIDDING

Any questions regarding the Contract Documents or bid forms shall be directed to the person listed in the Information For Bidders. All questions must be submitted at least ten (10) working days before the original bid deadline.

D. ADDENDA

When CITY deems it necessary, addenda may be issued to the Contract Documents to amend, clarify or correct matter contained therein. Such addenda shall constitute a part of the Contract Documents and shall be equally binding with them. Addenda shall be forwarded to all prospective bidders when such addenda are issued prior to receipt of bids. Bidder must acknowledge all addenda on the bid form. Failure to acknowledge all addenda issued will render the bid nonresponsive.

E. BID FORM

All bids must be submitted upon blank forms provided in the Contract Documents. Bids shall include all applicable taxes that the Contractor is required to pay. All bids must give the prices proposed and must be signed by the bidder and include bidder's business address. If the bid is made by an individual, his name and business address must be shown. If made by a firm or partnership, the name and business address of each member of the firm or partnership must be shown. If made by a corporation, the bid must show the name of the state(s) in which the bidder is incorporated and the names, titles, and business addresses of the corporation's president, secretary, and treasurer. All bids shall be submitted as directed in the Notice Inviting Bids under sealed cover plainly marked as a bid, and identifying the project to which the bid relates and the date of the bid opening therefor. Bids which are not properly marked may be disregarded.

F. PUBLIC OPENING OF BIDS

Bids will be opened and read publicly at the time and place indicated in Notice Inviting Bids. Bidders or their authorized agent are invited to be present.

SECTION GC-3 AWARD AND EXECUTION OF CONTRACT

A. AWARD OF CONTRACT

CITY reserves the right to reject any and all bids. The contract will be awarded, if at all, to the lowest responsive responsible bidder whose bid complies with all the requirements set forth in the Notice Inviting Bids and Information to Bidders and all documents referenced therein.

In the event that bids are required to include prices for items that may be added to or deducted from the scope of the work of the contract for which the bid is being submitted, the lowest bid shall be the lowest bid price on the base contract those additive or deductive items that were specifically identified in the bid solicitation as being used for the purpose of determining the lowest bid price. CITY reserves the right to add to or deduct from the contract any of the additive or deductive items after the lowest responsible bidder has been determined.

The contract will be awarded, if at all, within 60 calendar days after the opening of the bids.

The Work will not start until CITY has successfully acquired all necessary rights of way, easements and permits to begin work on this project.

B. CONTRACT BONDS

The successful bidder shall furnish two separate contract bonds. Each of the bonds shall be executed in an amount equal to at least 100% of the Contract Price. One bond shall guaranty the faithful performance of the contract by the Contractor; and the other bond shall secure payment of the claims of laborers, mechanics, and material suppliers employed under the contract and shall contain all provisions required by law to be included

in such bond forms, including the requirements of Civil Code Sections 3247 - 3252. No alteration, extension of time, extra and additional work, or other change authorized by the Contract Documents will affect the obligations of the surety or sureties on the payment or performance bonds, and no notice to the surety or sureties shall be required.

Any bond required herein shall be issued by a corporate surety admitted to transact surety business in the State of California and holding a valid Certificate of Authority to transact Surety Insurance in the State of California.

C. EXECUTION OF THE CONTRACT

The Contract shall be signed by the successful bidder and returned, together with the Contract bonds required by Section GC-3 (B) and insurance certificate required by Section GC-7 (S) of these General Conditions, after the bidder has received notice that the Contract has been awarded. No bid shall be considered binding upon the City of Saratoga until the award of the contract by the Council.

D. NOTICE TO PROCEED

A separate Notice to Proceed will be issued to the Contractor for this work. Within ten (10) working days from the Notice to Proceed or date specified in the Notice to Proceed, the Contractor shall commence work. Working days will be charged to the Contractor after the ten-day period has elapsed.

E. FAILURE TO EXECUTE CONTRACT

Failure to execute the Agreement and file acceptable performance and payment bonds and insurance as provided herein within fifteen (15) calendar days after the bidder has received notice that the contract for the Work has been awarded to him, shall be just cause for the annulment of the award and the forfeiture of the bid guaranty. Upon any such failure by the successful bidder, the contract for the work may be awarded to the second lowest responsible bidder. If the second lowest responsible bidder fails to execute the Agreement and file acceptable bonds and insurance as provided herein within fifteen (15) calendar days after such bidder has received notice that the contract for the Work has been awarded to him, the contract for the Work may be awarded to the third lowest responsible bidder. Failure of the second or of the third lowest responsible bidder to whom a contract is so awarded to execute the Agreement and file acceptable bonds and insurance as provided herein within fifteen (15) calendar days after such bidder has received notice that the contract for the Work has been awarded to him shall be just cause for the annulment of the award and the forfeiture of the bid guaranty of each such bidder.

F. RETURN OF BID GUARANTEES

CITY will retain all bid guarantees until the Agreement for the Work has been fully executed and CITY has received the bonds and evidence of insurance required to be furnished, or CITY has acted to reject all bids. CITY will return the bid guarantees of unsuccessful bidders, other than those forfeited.

SECTION GC-4 SCOPE OF WORK

A. INTENT OF PLANS AND SPECIFICATIONS

The intent of the Contract Documents is to prescribe the details for the construction and completion of the work the Contractor undertakes to perform.

Where the plans or specifications describe portions of the work in general terms, but not in complete detail, it is understood that only the best general practice is to prevail and that only materials and workmanship of the first quality are to be used. Unless otherwise specified, the Contractor shall furnish all labor, material, tools, equipment, flaggers, and incidentals, and do all the work involved in executing the contract in a satisfactory and workmanlike manner.

B. STANDARD SPECIFICATIONS AND SPECIAL CONDITIONS

All work embraced herein shall be constructed in strict accordance with the applicable codes, plans and the **2006 Caltrans Standard Plans & Specifications & CSI**, where applicable. All work will be done under the inspection of City and the Director of Public Works and any other public agency with jurisdiction over the Project and shall be the responsibility of the Contractor.

The work embraced herein shall be done in accordance with specifications approved by CITY if such work, material or equipment is not specifically detailed in the Contract Documents, Special Conditions, or accompanying plans.

The parts of the Contract Documents are intended to be complementary.

In case of conflict between Sections 1 through 9 of the Caltrans Standard Specifications and the General Conditions or Special Conditions of this Agreement, the General Conditions or Special Conditions shall control. In case of a conflict between the General Conditions and the Special Conditions, the Special Conditions shall control. In case of conflict between the Caltrans Standard Specifications and the other Contract Documents, the provisions of paragraph GC-5.D Coordination And Interpretation Of Plans, Standard Specifications, and Special Conditions shall apply.

C. FINAL CLEAN-UP

Before acceptance and final payment, the Contractor shall clean the streets, roads, structures, and all ground occupied by him in connection with the Work, of all rubbish, excess materials, temporary structures, and equipment. All parts of the Work shall be left in a neat and presentable condition. Any damage to property, missing signs, mailboxes, etc. must be repaired/replaced to the satisfaction of CITY. Full compensation for final clean up shall be deemed included in the prices paid for the various contract items of work, and no separate payment will be made therefor.

D. CHANGES

CITY reserves the right to make such alterations, deviations, additions to or omissions from the Contract Documents, including the right to increase or decrease the quantity of any

item or portion of the Work or to omit any item or portion of the Work, as may be deemed by the Director of Public Works to be necessary or advisable and to require such extra work as may be determined by the Director of Public Works to be necessary for the proper completion or construction of the whole work. Changes in quantities shall be in accordance with the provisions of Section 4-1.03B ("Increased or Decreased Quantities") of the Caltrans Standard Specifications.

Any such changes will be set forth in a contract change order which will specify, in addition to the work to be done in connection with the change made, adjustment of contract time, if any, and the basis of compensation for such work. A contract change order will not become effective until approved by CITY in writing.

All changes in the work shall be made as provided in the Contract Documents. Notice is hereby given that under certain circumstances, changes may require the approval of the Council, and may further require notice to affected property owners and a public hearing.

E. SALVAGE FOR THE CITY

The Contractor shall remove and preserve carefully any materials designated to be salvaged for the City and shall arrange for the delivery of those materials to the City as directed by the Director of Public Works. The Contractor shall be liable for any damage or destruction of materials designated for salvage.

F. SEVERABILITY CLAUSE

If any provision or any part of any provision of these Contract Documents is, for any reason, held to be invalid, unenforceable or contrary to any public policy, law, statute, regulation or ordinance, then the remainder of these Contract Documents shall not be affected thereby and shall remain valid and fully enforceable.

G. EXTRA WORK

New and unforeseen work will be classed as extra work when such work cannot be covered by any of the various items or combination of items for which there is a bid price. The Contractor shall do no extra work except upon written order from the Director of Public Works. Compensation for authorized extra work will be paid as previously agreed upon in writing, or by force account as provided in Section 9-1.03 ("Force Account Payment") of the Caltrans Standard Specifications.

SECTION GC-5 CONTROL OF WORK

A. AUTHORITY OF DIRECTOR OF PUBLIC WORKS

The Director of Public Works shall decide all questions which may arise as to the quality or acceptability of materials furnished and work performed and as to the manner or performance and loss of progress of the work; all questions which may arise as to the interpretation of the plans and specifications; all questions as to the acceptable fulfillment of the contract on the part of the Contractor; and all questions as to compensation. The

Director of Public Work's decision shall be final and shall have authority to enforce and make effective such decisions and orders which the Contractor shall carry out promptly.

B. PLANS AND WORKING DRAWINGS

All authorized alterations affecting the requirements and information given on the approved plans shall be in writing. No changes shall be made to any plan or drawing without approval of the Director of Public Works.

The Plans furnished consist of general drawings and show such details as are necessary to give a comprehensive idea of the construction contemplated. All authorized alterations affecting the requirements and information given on the contract plans shall be in writing.

The Plans shall be supplemented by such working drawings prepared by the Contractor as are necessary to perform the Work adequately. No change shall be made by the Contractor to any working drawing after it has been approved by the Director of Public Works.

It is expressly understood, however, that approval of the Contractor's working drawings shall not relieve the Contractor of any responsibility for accuracy of dimensions and details, or for mutual agreement of dimensions and details. Contractor shall be responsible for agreement and conformity of his working drawings with the Contract Documents.

Full compensation for furnishing all working drawings shall be deemed included in the prices paid for the contract items of work to which such drawings relate and no separate payment will be made therefor.

C. CONFORMITY WITH CONTRACT DOCUMENTS AND ALLOWABLE DEVIATIONS

Work and materials shall conform to the lines, grades, cross sections, dimensions and material requirements, including tolerances, in the Contract Documents. Although measurement, sampling and testing may be considered evidence as to such conformity, the Director of Public Works shall be the sole judge as to whether the work or materials deviate from the plans and specifications, and his decision as to any allowable deviations therefrom shall be final. Deviations from the approved plans, as may be required by the exigencies of construction, will be determined in all cases by the Director of Public Works and authorized in writing.

D. COORDINATION AND INTERPRETATION OF PLANS, STANDARD SPECIFICATIONS, AND SPECIAL CONDITIONS

The Caltrans Standard Specifications, the Santa Clara County Standard Plans and Specifications (if any), any Special Conditions, these General Conditions, contract change orders, and all supplementary documents are essential parts of the Contract Documents, and a requirement occurring in one is binding as though occurring in all. They are intended to be cooperative, to describe, and to provide for a complete work. In the event of a conflict, the most stringent shall govern.

In the event of any discrepancy between any drawing and the figures written thereon, the figures shall be taken as correct. Detail drawings shall prevail over general drawings.\

E. ORDER OF WORK

When required by the Special Conditions or Plans, the Contractor shall follow the sequence of operations as set forth therein. Full compensation for conforming with such requirements will be deemed included in the prices paid for the various contract items of work and no separate payment will be made therefor.

F. SUPERINTENDENCE

The Contractor shall provide competent supervision of the Work as approved by the Director of Public Works. The Contractor or designated representative shall be present at the site at all times while work is actually in progress. Before starting work, the Contractor shall designate in writing, a representative who shall have the authority to represent and act for the Contractor regarding any written or verbal directions, or requests of the Director of Public Works. Directions or requests delivered to the representative shall have the same force and effect as if delivered to the Contractor. The authorized representative shall be an employee of the Contractor's organization and shall be shown on the Contractor's payroll

The Contractor will not designate a subcontractor as the authorized representative.

Whenever the Contractor or its representative is not present on any particular part of the work where the Director of Public Works desires to give direction, the Director of Public Works will give orders which shall be received and obeyed by the superintendent or foreman who may have charge of the particular work for which the order is given.

Failure of the Contractor or its representative to be present at the job site at all times when work is in progress will be deemed failure on the part of the Contractor to perform a provision of the Contract. If the Contractor or its representative is not present at the job site, the Director of Public Works may, in accordance with Section 8-1.05 ("Temporary Suspension of Work") of the Caltrans Standard Specifications, suspend all work until satisfactory arrangements have been made to have a designated representative on the site at all times when work is in progress. No additional compensation or additional working days will be allowed for such suspension. All working days lost due to such suspension will be charged to the Contractor.

During periods when work is suspended, arrangements acceptable to the Director of Public Works shall be made for any emergency work that is required.

G. LINES AND GRADES

Unless otherwise stated, stakes or marks will be set by the Contractor, as the Director of Public Works determines to be necessary, to establish the lines and grades required for the completion of the Work.

When the Contractor requires stakes or marks outside the scope of this project, the Contractor shall notify the Director of Public Works of his requirements in writing at least three (3) calendar days (72 hours) in advance of starting operations that require such stakes or marks. The Contractor shall coordinate his work such that each staking request will have a minimum of four (4) hours of field staking time. If the Contractor submits a

request having less than the minimum four (4) hours of field staking time, the Contractor will be billed the Director of Public Work's time and cost for the difference between the four (4) hour minimum and the actual staking time.

The Contractor shall ensure that the area to receive stakes shall be free of all obstructions, equipment, stockpiles, etc. If the area to receive stakes is not ready for staking when City's representative arrives on the site, the original 72 hour advance time will become void and City's representative will have 72 hours from the time the area is made ready for stakes to place the stakes and to prepare cut sheets.

Any stakes and marks set by the Director of Public Works shall be carefully protected from vandalism and preserved by the Contractor. In case such stakes and marks are lost, destroyed, or damaged, the Contractor must notify the Director of Public Works in writing of his request for the stakes to be reset. Upon receipt of the request, the Director of Public Works will replace the stakes within three (3) working days. The Contractor will be charged for the cost of necessary replacement or restoration of stakes and marks which in the judgment of the Director of Public Works were carelessly lost or willfully destroyed or damaged by the Contractor's operations. Restake charges shall include any recalculation, checking, and administrative charges CITY incurs. These charges will be deducted from any monies due or to become due the Contractor.

H. INSPECTION

The Director of Public Works shall at all times have access to the Work during its construction and shall be furnished with every reasonable facility for ascertaining that the materials and the workmanship are in accordance with the requirements and intentions of the Contract Documents. All work done and all materials furnished shall be subject to the Engineer's inspection.

The inspection of the work or materials shall not relieve the Contractor of any of its obligations to perform the Work as prescribed. Work and materials not meeting such requirements shall be made good; unsuitable work or materials may be rejected, notwithstanding that such work or materials may have been previously inspected by the Director of Public Works or that payment therefor has been included in a progress estimate.

I. REMOVAL OF REJECTED AND UNAUTHORIZED WORK

The Contractor shall remedy or remove and replace at its own expense and in an acceptable manner all work that has been rejected. CITY will not pay for such removal, replacement, or remedial work.

Any work done beyond the lines and grades shown on the plans or established by the Director of Public Works, or any extra work done without written authority, will be deemed unauthorized work for which CITY will not pay. Upon order of the Director of Public Works, the Contractor shall remedy or remove and replace unauthorized work at the Contractor's expense.

Upon failure of the Contractor to comply promptly with any order of the Director of Public Works made under this section, the Director of Public Works may cause rejected or unauthorized work to be remedied, removed, or replaced, and to deduct the costs from any monies due or to become due the Contractor.

J. CHARACTER OF WORKERS

If any subcontractor or person employed by the Contractor appears to CITY to be incompetent or to act in a disorderly or improper manner, he or she shall be discharged immediately on the request of CITY, and such person shall not again be employed on the Work.

K. FINAL INSPECTION

When the work has been completed, CITY and the Director of Public Works, or Director of Public Work's designee, will make the final inspection. The Contractor shall request the final inspection in writing.

SECTION GC-6 CONTROL OF MATERIALS

A. GENERAL

The control of the materials used in the work, including but not limited to the sources, handling, testing, and rejections, shall conform to Section 6 of the 2006 Caltrans Standard Specifications.

B. SAMPLES AND TESTS

The source of supply of each material shall be approved by the Director of Public Works before delivery begins and before the material is used in the work.

Upon request of the Director of Public Works or as specified in these documents, representative material samples of the prescribed character and quality shall be submitted by the Contractor for testing or examination. No material shall be used without approval of the Director of Public Works.

All tests of materials furnished by the Contractor shall be made in accordance with commonly recognized standards of national organizations, and such special methods and tests as are prescribed in the Caltrans Standard Specifications, and the Special Conditions. The cost of re-testing material or workmanship that fails to pass the first test shall be borne by the Contractor. Contractor shall submit all test results to the Director of Public Works within five (5) calendar days of the testing at no charge to CITY.

Full compensation for conforming with the requirements of this section shall be deemed included in the prices paid for the various contract items of work and materials, and no separate payment will be made therefor.

C. DEFECTIVE MATERIALS

All materials that the Director of Public Works determines do not conform to the requirements of the Contract Documents will be rejected, whether in place or not. They

shall be removed immediately from the work site, unless otherwise permitted by the Director of Public Works. No rejected material shall be used in the Work, unless the defects are corrected and the Director of Public Works gives written approval.

Upon failure of the Contractor to comply promptly with any order of the Director of Public Works made pursuant to this section, the Director of Public Works may cause the removal and/or replacement of rejected material and may deduct the costs thereof from any monies due or to become due the Contractor.

D. CHANGES TO SPECIFICATIONS/APPROVED EQUALS

Changes to the specifications will be made by written addendum executed by the **Public Works Director.**

Requests for approved equals or for clarification of specifications and protests of specifications must be received by CITY, in writing, by the time specified in the Instructions to Bidders prior to bid deadline or, if made after the contract is awarded, no more than fifteen days after the facts giving rise to the request came to the attention of the Contractor. Any request for an approved equal or protest of the specifications must be fully supported with technical data, test results, or other pertinent information as evidence that the substitute offered is equal to or better than the specification requirement.

If CITY determines the requested material or system is equal to that specified, CITY will notify the Bidders prior to bid deadline or Contractor within thirty calendar days after receiving the request. City's failure to notify the Bidders or the Contractor of an approved equal shall be deemed a rejection of the requested substitution.

Wherever brand, manufacturer or product names are indicated in the specifications, they are included ONLY for the purpose of establishing identification and a general description of the item. Wherever such names appear, the term "or approved equal" should be understood to follow.

It should be understood that specifying a brand name, components and/or equipment in this specification shall not relieve the supplier from its responsibility to produce the product in accordance with the performance warranty and contractual requirements. The supplier is responsible for notifying CITY of any inappropriate brand name, component and/or equipment that may be called for in the specifications and to propose a suitable substitute for consideration.

D. WARRANTY OF TITLE.

Contractor warrants to CITY and its successors and assigns that the title to the materials, supplies or equipment covered by the Contract, when delivered to CITY or to its successors or assigns, is free from all liens and encumbrances.

E. WARRANTY OF FITNESS.

Contractor warrants that all materials, supplies and products furnished meet the requirements and conditions of the Contract Documents and are fit for the purpose intended.

F. WARRANTY OF MERCHANTABILITY.

Contractor warrants that the goods are merchantable in accordance California Commercial Code Section 2314. In accepting this and other warranties and the materials or supplies to be manufactured or assembled pursuant to the Contract Documents, CITY does not waive any warranty, either express or implied, in California Commercial Code Sections 2312 through 2315, inclusive, or any liability of the manufacturer as determined by any decision of a court of the State of California or of the United States.

SECTION GC-7 LEGAL RELATIONS AND RESPONSIBILITY

A. GENERAL

In connection with laws to be observed and responsibility of the Contractor, attention is directed to Section 7 ("Legal Relations and Responsibility") of the Caltrans Standard Specifications and to the laws applicable to this contract and to the Work that are referenced therein. Full compensation for conforming to the provisions of Section 7-1.08 ("Public Convenience") and Section 7-1.09("Public Safety") shall be deemed included in the prices paid for the various contract items of work, and no separate payment will be made therefor.

B. LAWS TO BE OBSERVED

The Contractor shall keep itself fully informed of all existing and future state and federal laws and county and municipal ordinances and regulations which in any manner affect those engaged or employed in the work, or the materials used in the work, or which in any way affect the conduct of work, and of all such orders and decrees of bodies or tribunals having any jurisdiction or authority over the same.

The Contractor shall at all times observe and comply with, and shall cause all his agents and employees to observe and comply with all existing and future laws, ordinances, regulations, orders, and decrees applicable to this contract or to the Work.

The Contractor shall protect and indemnify CITY, and all officers and employees thereof connected with the work, against any claim or liability arising from or based on the violation of any such law, ordinance, regulation, order, or decree, whether by City’s representative or its employees. If any discrepancy or inconsistency is discovered in the plans, drawings, specifications, or contract for the work in relation to any such law, ordinance, regulation, order, or decree, the Contractor shall forthwith report the same to the Director of Public Works in writing.

C. LABOR

In connection with laws to be observed and responsibility of the Contractor, attention is directed to Section 7 ("Legal Relations and Responsibility") of the Standard Specifications and to the laws applicable to this contract and to the Work that are referenced therein. Attention is particularly directed to the subsections pertaining to Hours of Labor, Alien Labor, Labor Discrimination, Prevailing Wages, Apprentices, and the Fair Labor Standards Act.

This is a public works contract within the meaning of Part 7 of Division 2 of the California Labor Code (Sections 1720 et seq.), and the contractor and any subcontractor under him shall pay not less than the specified prevailing wage rates to all workers employed. Pursuant to the provisions of Section 1773 of the California Labor Code, the CITY has obtained the general prevailing rate of wages and employer payments for health and welfare, vacation, pension and similar purposes in the City of Saratoga, a copy of which is on file 13777 Fruitvale Avenue, Saratoga, California at the office of the Public Works Director, and shall be made available for viewing to any interested party upon request.

Attention is directed to the provisions in of the Labor Code Sections 1777.5 and 1777.6 concerning the employment of apprentices by the Contractor or any subcontractor under the Contractor. It shall be the responsibility of the Contractor to comply with and to insure that all subcontractors comply with the requirements of said sections in the employment of apprentices. Information relative to apprenticeship standards, wage schedules, and other requirements may be obtained from the Director of Industrial Relations, ex-officio the Administrator of Apprenticeship, San Francisco, California, or from the Division of Apprenticeship Standards and its branch offices.

Pursuant to the requirements of Division 4 of the Labor Code, the Contractor will be required to secure the payment of worker’s compensation to its employees in accordance with the provisions of Section 3700 of the Labor Code.

Prior to commencement of work, the Contractor shall sign and file with the Director of Public Works a certification in the following form:

"I am aware of the provisions of Section 3700 of the Labor Code which require every employer to be insured against liability for worker’s compensation or to undertake self-insurance in accordance with the provisions before commencing the performance of the work of this contract."

Full compensation for conforming to the requirements of this section shall be deemed included in the prices paid for the various contract items of work, and no separate payment will be made therefor.

All penalties set forth in Section 7 ("Legal Relations and Responsibilities") of the Caltrans Standard Specifications shall be payable to the City of Saratoga.

D. CONTRACTOR'S LICENSING LAWS

Attention is directed to the California Business and Professions Code Sections 7000 et seq. concerning the licensing of contractors. All bidders and subcontractors shall be licensed in accordance with the laws of this State and any bidder or subcontractor not so licensed is subject to penalties imposed by such laws.

E. CHILD AND FAMILY SUPPORT OBLIGATIONS

The contractor shall fully comply with all state and federal laws relating to child and family support enforcement, including, but not limited to, disclosure of information and compliance with earnings assignment orders, as provided in Chapter (commencing with Section 5200) of Part 5 of Division 9 of the Family Code.

F. DOMESTIC MATERIALS

Only such unmanufactured materials as have been produced in the United States, and only such manufactured materials as have been manufactured in the United States, substantially all from materials produced in the United States, shall be used in the performance of the contract, in accordance with the provisions of California Government Code Sections 4300 et seq.

Pursuant to California Government Code Section 4304, any person who fails to comply with this section of the contract shall not be awarded any contract for the construction, alteration or repair of public works or for the purchase of materials for public use for a period of three (3) years from the date of the violation.

G. PAYMENT OF TAXES

The contract prices paid for the Work shall include full compensation for all taxes the Contractor is required to pay, whether imposed by federal, state or local government, including, without being limited to, federal excise tax. Taxes shall be deemed included in the prices paid for the various contract items of work, and no separate payment will be made therefor.

H. PERMITS AND LICENSES

The Contractor shall procure all permits and licenses, pay all charges and fees, and give all notices necessary and incidental to the due and lawful prosecution of the Work. Any construction permits required by CITY for performing any work on this project will be issued by CITY at no charge to the Contractor. The Contractor and all subcontractors shall pay all City business license fees.

I. PATENTS

The Contractor shall assume all costs arising from the use of patented materials, equipment, devices, or processes used on or incorporated in the Work. In addition to the obligations set forth in paragraph N ("Responsibility for Damage") below, the Contractor shall indemnify, defend, and hold CITY, its elected and appointed officials, and its employees harmless against any claim arising from Contractor’s work under this Agreement in which a violation of intellectual property rights, including but not limited to copyright or patent infringement, is alleged.

J. SAFETY

The Contractor shall be solely and completely responsible for conditions of the job site, including safety of all persons (including employees) and property on or near the Project or adjacent to the work site during the performance of the Work. This requirement shall apply continuously and not be limited to normal working hours.

The duty of the Director of Public Works to conduct review of the Work does not include review or approval of the adequacy of the Contractor's safety program, safety supervisor, or any safety measures taken in, on, or near the job site.

Safety provisions shall conform to Cal-OSHA Safety Orders, and all other applicable federal, state, county, and local laws, ordinances, codes, and regulations. Where any of these are in conflict, the more stringent requirement shall be followed. The Contractor's failure to thoroughly familiarize itself with the aforementioned safety provisions shall not relieve it from the obligation to comply with such provisions or from the penalties set forth therein.

The Contractor shall develop and maintain for the duration of this contract a safety program that will effectively incorporate and implement all required safety provisions. The Contractor shall appoint a qualified employee to supervise and enforce compliance with the safety program. Information regarding the safety program shall be posted at the project site.

K. PUBLIC CONVENIENCE AND SAFETY

Contractor shall submit a traffic control plan to the Director of Public Works for approval prior to start of work.

The Contractor's attention is directed to Section 7-1.08 ("Public Convenience") and 7-1.09 ("Public Safety") of the Caltrans Standard Specifications. Full compensation for complying with the provisions of such subsections shall be deemed included in the prices paid for the various contract items of work, and no separate payment will be made therefor.

All signs required by the Director of Public Works shall be furnished and installed by the Contractor. The cost of furnishing, installing, maintaining, and removing such signs shall be deemed included in the prices paid for the various contract items of work, and no separate payment will be made therefor.

The Contractor shall notify the City of Saratoga Fire and Police Departments in writing at least 2 working days before closing any street or otherwise hindering access by emergency vehicles to any area.

L. FLAGGING COSTS

The costs of furnishing all flagmen and guards under the provisions of this section and Sections 7-1.08 ("Public Convenience"), 7-1.09 ("Public Safety"), and 12-2.02 ("Flagging Costs") of the Caltrans Standard Specifications will be borne by the Contractor and shall be

considered included in the prices paid for the various contract items of work; no separate payment will be made therefor.

M. PRESERVATION OF PROPERTY

Attention is directed to Section 7-1.12 ("Indemnification and Insurance") and to Section 8-1.10, ("Utility and Non-Highway Facilities") of the Caltrans Standard Specifications. Contractor shall exercise due care to avoid injury to existing highway improvements or facilities, utility facilities, adjacent property, and roadside trees and shrubbery that are not to be removed.

Roadside trees and shrubbery; pole lines, fences; mailboxes; signs; markers and monuments; buildings and structures; conduits; pipe lines under or above ground ; sewer and water lines ; all highway facilities ; and any other improvements or facilities within or adjacent to the work, other than those to be removed in accordance with the plans, shall be protected from injury or damage. If ordered by the Director of Public Works, the Contractor shall provide and install suitable safeguards, approved by the Director of Public Works, to protect such objects from injury or damage. If such objects are injured or damaged by reason of the Contractor's operation, they shall be replaced or restored at the Contractor's expense. The facilities shall be replaced or restored to a condition as good as when the Contractor entered upon the work, or as good as required by the contract, if any such objects are a part of the work being performed under the contract. The Director of Public Works may make or cause to be made such temporary repairs as are necessary to restore to service any damaged highway or other facility. The cost of such repairs shall be borne by the Contractor and may be deducted from any monies due or to become due to the Contractor under the contract.

It shall be the Contractor's responsibility to ascertain the existence of any underground improvements or facilities that may be subject to damage in the course of performing the Work. A minimum of forty-eight (48) hours, or two working days, prior to beginning of construction, the Contractor shall notify Underground Services Alert (USA), telephone 1-800-642-2444, to have existing facilities marked in the field.

Full compensation for furnishing all labor, materials, tools, equipment and incidentals, and for doing all the work involved in protecting or repairing property as specified in this section shall be deemed included in the prices paid for the various contract items of work and no separate payment will be made therefor.

N. PRE CONSTRUCTION SURVEY

The Contractor shall, if required by CITY, provide pre-construction color photographs, 35mm or larger film size, of the work site including surrounding areas as stated above. Each photograph shall be marked to indicate the date, name of work, and the location where the photograph was taken. Photographs shall be taken at intervals as directed by the Director of Public Works or his designee.

Prints shall be submitted in a three-ring photo album binder with clear plastic-covered fillers, four photos each side, grouped according to street, lateral, or line, and in sequence. Each group of prints shall be identified by a label that projects beyond the edge of filler and is easily recognized. Negatives may be placed within the filler sleeves or submitted separately.

Approximately twenty-five (25) photographs shall be submitted to the Director of Public Works for the Director of Public Work's approval. This approval shall be obtained before proceeding with the remaining photographs. Video may also be required if specified in the technical specifications.

The photographs and/or video tapes shall be submitted to the Director of Public Works either prior to or with the first progress payment request. The progress payment request will not be considered for payment until the Director of Public Works accepts this deliverable.

Full compensation for furnishing all pre-construction survey photos and/or videos shall be deemed included in the prices paid for the various contract items of work and no separate payment will be made therefor.

O. RESPONSIBILITY FOR DAMAGE

The City of Saratoga and all officers and employees thereof connected with the Work, including but not limited to the City Council, shall not be answerable or accountable in any manner for any loss or damage that may happen to the Work or any part thereof; for any loss or damage to any of the materials or other things used or employed in performing the Work; for injury to or death of any person; or for damage to property from any cause except losses due to sole or active negligence of the City of Saratoga's officers or employees.

All loss or damage arising from any unforeseen obstruction or difficulties, either natural or artificial, which may be encountered in the execution of the work, or the furnishing of the supplies, materials, or equipment, or from any action of the elements prior to final written acceptance of the work, or of the supplies, materials or equipment, or from any act or omission not authorized by the Contract Documents on the part of the Contractor or any agent or person employed by it, shall be sustained and borne solely by the Contractor.

Notwithstanding any other provision of the Contract Documents, Contractor shall, to the fullest extent allowed by law, defend, indemnify and hold harmless the City of Saratoga, its elected and appointed officials, and its employees from all liability, penalties, costs, losses, damages, expenses, causes of action, claims or judgments, including attorney's fees and other defense costs, resulting from injury to or death sustained by any person (including Contractor's employees), or damage to property of any kind, or any other injury or damage whatsoever arising out of or in any way connected with the performance of the Contract, including any of the same resulting from the alleged or actual negligent acts or omissions of City's officers, agents, contractors or employees; except that said indemnity shall not be applicable to injury, death or damage to property arising from the sole or active negligence or willful misconduct of CITY, its officers, agents, or employees who are directly responsible

to CITY. This indemnification shall extend to claims asserted after termination of this Contract for whatever reason.

Without limiting the generality of the foregoing indemnity, such indemnity obligation expressly extends to and includes any and all claims, demands, losses, damages, costs, expenses, fines, penalties, judgments or liability occasioned as a result of:

a) Damages to adjacent property caused by the conduct of the Work;
b) The violation by the Contractor, the Contractor's agents, employees, or independent contractors or subcontractors, of any provisions of federal, state or local law, including applicable administrative regulations such as, without limitation, discharge permit requirements;
c) Injury to or death of any person, or any property damage to property owned by any person while on or about the site or as a result of the Work, whether such persons are on or about the site by right or not, whenever the Work is alleged to have been a contributing cause in any degree whatsoever.

In addition to any remedy authorized by law, so much of the money due the Contractor under and by virtue of the contract as shall be considered necessary by CITY, may be retained by CITY until disposition has been made of such suits or claims for damage.

P. COOPERATION

Should construction be under way by CITY, other agencies or other contractors within or adjacent to the limits of the Work, or should work of any other nature be under way by other forces within or adjacent to said limits, the Contractor shall cooperate with all such other contractors or other forces to the end that any delay or hindrance to their work will be avoided.

CITY reserves the right to perform other or additional work at or near the site (including material sources) at any time, by the use of other forces.

Q. CONTRACTOR'S RESPONSIBILITY FOR WORK AND MATERIALS

Until the final acceptance of the contract, the Contractor shall have the charge and care of the Work and of the materials to be used therein, including materials for which partial payment has been received. CITY shall not be held responsible for the care or protection of any material or parts of the Work prior to final acceptance, except as expressly provided in the Special Conditions.

R. ACCEPTANCE OF CONTRACT

Upon completion of the Project CITY will conduct such tests as may be required to determine to its own satisfaction that the Project is in conformance with the terms, conditions and requirements of the Contract Documents. After final inspection, CITY shall determine whether or not to accept the Project and will notify the Contractor in writing within fifteen (15) days thereof. In the event of non-acceptance, CITY shall inform the Contractor in writing of the deficiencies found.

When the Director of Public Works has made the final inspection and determines that the contract has been completed in all respects in accordance with the plans and specifications, the Director of Public Works may recommend that the Council formally accept the contract. Immediately upon and after such acceptance by the Council, the Contractor will not be required to perform any further work, except completion or correction of such items as the Director of Public Works may direct, and the Contractor shall be relieved of his responsibility for injury to persons or property or damage to the Work that occurs after the formal acceptance by the Council.

The formal acceptance by the Council does not relieve the Contractor of the one (1) year maintenance responsibility.

S. PERSONAL LIABILITY

Neither the Council, nor any other officer or authorized employee of the City of Saratoga, nor any officer or employee of any state, county, or local agency shall be personally responsible for any liability arising under or by virtue of the contract.

T. INSURANCE

Within ten (10) days after award of the Contract, the Contractor shall promptly obtain, at its own expense, all the insurance described in this section, and submit coverage verification for review and approval by CITY. This insurance shall be in addition to any other form of insurance or bonds required under the terms of the contract.

The Notice to Proceed with the Work will not be issued, and the Contractor shall not commence work, until such insurance has been approved by CITY. Such insurance shall remain in full force and effect at all times during the prosecution of the Work and until the final completion and acceptance thereof. In addition, the Commercial General Liability Insurance shall be maintained for a minimum of five (5) years after final completion and acceptance of the Work. The Notice to Proceed does not relieve the Contractor of the duty to obtain such insurance as required herein.

The Contractor shall not allow any subcontractors to commence work until all insurance required of the subcontractor has been obtained and verified by the Contractor and submitted to CITY. Subcontractors shall furnish original certificates and endorsements as verification of insurance coverage. The liability insurance limits specified herein shall apply to all subcontractors listed in Contractor’s bid. The Contractor shall designate appropriate insurance limits for all other subcontractors.

Companies writing the insurance under this article shall be authorized to do business in the State of California. Insurance is to be placed with insurers with a current A.M. Best’s rating of no less than A:VII.

Contractor shall include all costs for all insurance in its bid.

Nothing contained in these insurance requirements is to be construed as limiting the extent of the Contractor's responsibility for payment of damages resulting from its operations under this Contract. Coverage required hereunder shall operate as Primary Insurance.

The Contractor shall procure, pay for, and maintain throughout the duration of this Contract the following insurance coverage:

Commercial General and Automobile Liability Insurance - This insurance shall protect the Contractor from claims for bodily injury and property damage which may arise because of the nature of the work or from operations under this Contract. The coverage shall be at least as broad as Insurance Services Office (ISO) Commercial General Liability coverage (occurrence Form CG 0001), ISO Form G0009 11 88 Owners and Contractors Protective Liability Coverage – Coverage for Operations of Designated Contractor) and Insurance Services Office Form Number CA 0001 covering Automobile Liability, code 1 (any auto).

Claims-made policies will not be accepted.

a. Additional Insureds – The Commercial General Liability ("CGL") policy of insurance shall be endorsed to name as additional insureds the City of Saratoga, all of its elected and appointed officials, directors, officers, employees, agents and servants, using ISO Form CG201185. This policy shall provide coverage to each of the additional insureds with respect to the Work. Both bodily injury and property damage insurance must be on an occurrence basis. The policy shall be endorsed to provide primary coverage to the full limit of liability stated in the declarations. If the additional insureds have any other insurance or self-insurance against the loss covered by this policy, that other insurance shall be excess insurance and not contribute with contractor’s policy.

b. Amount of Coverage - The bodily injury and property damage liability of the CGL insurance shall provide coverage in the following limits of liability: $1,000,000 per occurrence with an annual general aggregate limit of not less than $2,000,000, and $2,000,000 products and completed operations aggregate, combined single limit. The Automobile Liability insurance policy shall provide minimum limits of $1,000,000 per accident for bodily injury and property damage.

c. Subcontractors - The CGL insurance shall not require the Contractor to have its subcontractors named as insureds in the Contractor's policy, but the insurance shall protect the Contractor from contingent liability which may arise from operations of its subcontractors.

d. Included Coverage - The CGL insurance shall also include all of the following coverages:
Premises – Operations;
Owner's/Independent Contractors and Contractor's Protective;
Products - Completed Operations;

Personal Injury - (False Arrest, Libel, Wrongful Eviction, etc.);
Blanket Contractual Liability, including the indemnity agreement in this contract;
Separation of Insureds / Cross-Liability Provisions;
Duty to Defend All Insureds;
Deletion of any limitation on Coverage for Bodily Injury or Property Damage Arising Out of Subsidence or Soil or Earth Movement;
A provision that the annual general aggregate and the products and completed operations annual aggregate shall apply separately to the Project;
Pollution Legal Liability Endorsement;
XCU - Explosion, Collapse, Underground Damage. (XCU may be deleted with City's prior written approval when not applicable to operations performed by the Contractor or its sub-contractors.)

e. Umbrella Policy or Follow-Form Excess Liability Policy - At the option of the Contractor, primary limits may be less than required, with an Umbrella Policy or Follow-Form Excess Liability Policy providing the additional limits needed. This form of insurance will be acceptable provided that the Primary and Umbrella/Excess Policies both provide the insurance coverages herein required, including all additional insured requirements. The umbrella/excess insurance shall be provided on a "following form" basis with coverage at least as broad as provided on the underlying CGL insurance.

f. The certificate of insurance shall guaranty that the policy will not be amended, altered, modified, or canceled without at least thirty (30) days notice mailed by registered mail to the Administrative Services Director, City of Saratoga; 13777 Fruitvale Ave.; Saratoga, California 95070.

g. In accordance with Insurance Code Section 11580.04, coverage shall not extend to any indemnity coverage for the active negligence of the additional insured in any case where any agreement to indemnify the additional insured would be invalid under Civil Code Section 2782(b).

Workers' Compensation Insurance – California Labor Code Sections 3700 et seq. require every employer to be insured against liability for Workers' Compensation or to undertake self-insurance in accordance with the provisions of that code. The Contractor shall comply and shall ensure that all subcontractors comply with such provisions. In addition, the Contractor shall have and maintain Employers' Liability insurance with limits of $1,000,000 per accident for bodily injury or disease before commencing the performance of the Work.

Before the Notice to Proceed is issued, the Contractor shall submit written evidence that the Contractor has obtained for the period of the Contract full Workers' Compensation Insurance coverage for all persons whom it employs or may employ in carrying out the Work. This insurance shall be in accordance with the requirements of the most current and applicable State Workers' Compensation Insurance Laws.

Builder's Risk Insurance - The Contractor shall purchase and maintain "All Risk or Special Form" Builder's Risk Insurance on a replacement cost basis in an amount equal to the full replacement cost of the Work on a completed value basis, including coverage for ‘soft costs’ such as design, engineering, and construction management fees. The builder's risk insurance shall cover all risks of loss, including but not limited to fire; lightning; windstorm; hail, explosion; riot; riot attending a strike; civil commotion; smoke damage; damage by aircraft or vehicles; vandalism and malicious mischief; theft; collapse; flood; and earthquake. This insurance shall name the City of Saratoga, its elected and appointed officials, employees, agents and servants and the Contractor as insureds, as their interests may appear, and shall include coverage including, but not limited to all damages or loss to the Work; to appurtenances; to materials and equipment to be used on the Project while the same are in transit or stored on or off the project site; and/or to construction plant and temporary structures. This insurance is required only if listed as a separate bid item in the bid schedule.

Coverage for acts of God, as defined in Public Contract Code Section 7105, in excess of five percent of the Contract amount is subject to separate coverage and is required only if listed as a separate bid item in the bid schedule.

Builder’s Risk Insurance policies shall contain the following provisions:

(1) CITY shall be named as loss payee.

(2) The insurer shall waive all rights of subrogation against CITY.

Builder’s Risk Insurance may have a deductible clause not to exceed the following limits:

(1) If, pursuant to Public Contract Code Section 7105, CITY requires coverage for any damage to the work caused by an act of God, and has set forth the amount of the work to be covered and the insurance premium for such coverage as a separate bid item, the deductible for such coverage shall not exceed five percent (5%) of the value of the Work at risk at the time of the loss.

(2) All other perils: $5,000.

The Contractor shall be responsible for paying any and all deductible costs.

The policy shall provide CITY the right to occupy the premises without termination of the policy until acceptance of the project.

Proof of Coverage - Before the Notice to Proceed is issued, the Contractor shall furnish CITY with certificate(s) evidencing issuance of all required insurance and copies of the policy declaration or information page(s) and endorsements. The certificate(s) and endorsements for each insurance policy are to be signed by a person authorized by that insurer to bind coverage on its behalf. The certificates are to be on amended ACORD forms and ISO endorsement forms or equivalent endorsement forms acceptable to CITY.

The certificate(s), policy declaration or information page(s), and endorsements are to be received and approved by CITY before work commences. Endorsements are not required for Workers Compensation or Builder's Risk Insurances. Such certificates of insurance shall provide that the insurance policy shall not be cancelable, nonrenewable, or otherwise be subject to material modification, except with thirty (30) days' prior written notice to CITY. Contractor shall also provide certificate(s) evidencing renewals of all insurance required herein, at least ten (10) days prior to the expiration date of any such insurance.

Any deductibles or self-insured retentions must be declared to and approved by CITY. At the option of CITY, either the insurer shall reduce or eliminate such deductibles or self-insured retentions as respects CITY and other additional insureds or the Contractor shall procure a bond guaranteeing payment of losses, related investigations, claim administration, and defense expenses.

If the Contractor fails to comply strictly with all requirements of this section or if CITY receives any notice that any required insurance coverage will be diminished or canceled, CITY, at its option, may, notwithstanding any other provisions of this Agreement to the contrary, immediately declare a material breach of this Agreement and suspend all further work pursuant to this Agreement.

U. ABANDONMENT OR DELAY OF WORK

CITY reserves the right to terminate the Contractor's control of the Work in accordance with Section 8-1.08 ("Termination of Control") of the Caltrans Standard Specifications.

CITY reserves the right to terminate the contract in accordance with Section 8-1.11 ("Termination of Contract") of the Caltrans Standard Specifications.

CITY also reserves the right to terminate the Contract for any of the following reasons:

- The Contractor is insolvent or has made a general assignment for the benefit of creditors, or a receiver has been appointed on account of the insolvency of the Contractor.
- The Contractor or any of its subcontractors violate any of the material provisions of the Agreement or fail to perform the Work within the time specified in the Contract Documents.
- The Contractor or any of its subcontractors should fail to make prompt payment to subcontractors or to suppliers for material or for labor.
- The Contractor or a subcontractor persistently disregards laws, ordinances, or the instructions of CITY or the Director of Public Works.
- The Contractor fails to abide by a proper stop work notice or fails to correct rejected work or materials.
- The Contractor fails to provide and keep in full force and effect all required insurance or fails to cause all subcontractors to so comply.

- The Contractor fails to supply a sufficient number of properly skilled workers or proper materials, or fails to diligently prosecute the Work.
- The Contractor commits any substantial violation of the Contract that constitutes a material breach of the Contract.

CITY may, without prejudice to any other right or remedy, give written notice to the Contractor of its intention to terminate the contract.

If, within seven (7) days of the delivery of such notice, the Contractor does not cease such violation or otherwise make satisfactory arrangements for a correction thereof, which arrangements are set forth in a written agreement signed by the Contractor and CITY, the Contractor's right to complete the Work shall cease and terminate.

If CITY terminates the Contractor's control for failure to correct the violation, it shall immediately give written notice of termination to the Contractor.

If CITY takes over the Work, it may prosecute the same to completion by contract or by any other method it deems advisable, for the account and at the expense of the Contractor. The Contractor shall be liable to CITY for any excess costs, including management, supervision, and design support, occasioned thereby. In such event, CITY may, without liability, take possession of and utilize in completing the Work, the Contractor's materials and equipment to be incorporated into the Work, whether stored at the project site or elsewhere. Whenever the Contractor's right to proceed is terminated, the Contractor shall not be entitled to receive any further payment until the Work is finished.

If CITY terminates the Contract for cause, CITY may retain out of any funds due or to become due the Contractor the amount of the cost of completing the Work and any expense incidental to reletting the contract or performing the Work. CITY may also hold the Contractor and the Contractor's sureties responsible for such cost and expense, and for any damages resulting from the abandonment or failure. The Contractor shall not receive any further payment until the Work is complete.

V. ASSIGNMENT OF ANTI-TRUST CLAIMS

In entering into a public works contract or a subcontract to supply goods, services, or materials pursuant to a public works contract, the contractor or subcontractor offers and agrees to assign to the awarding body all rights, title, and interest in and to all causes of action it may have under Section 4 of the Clayton Act (15 U.S.C. Sec. 15) or under the Cartwright Act (Chapter 2 (commencing with Section 16700) of Part 2 of Division 7 of the Business and Professions Code), arising from purchases of goods, services, or materials pursuant to the public works contract or the subcontract. This assignment shall be made and become effective at the time the awarding body tenders final payment to the contractor, without further acknowledgement by the parties.

W. CONTRACTOR'S BOOKS AND RECORDS.

A. Contractor and its subcontractors shall establish and maintain records pertaining to this contract. Contractor's and subcontractors' accounting systems shall conform to generally accepted accounting principles and all records shall provide a breakdown of total costs charged under this contract, including properly executed payrolls, time records, invoices and vouchers.

B. Contractor shall maintain any and all ledgers, books of account, invoices, vouchers, canceled checks and other records or documents evidencing or relating to charges for services or expenditures and disbursements charged to CITY for a minimum period of three (3) years, or for any longer period required by law, from the date of final payment to Contractor to this Agreement.

C. Contractor shall maintain all documents and records which demonstrate performance under this Agreement for a minimum period of three (3) years, or for any longer period required by law, from the date of termination or completion of this Agreement.

D. Any records, data or documents required to be maintained pursuant to this Agreement shall be made available for inspection, copying or audit, at any time during regular business hours, upon written request by CITY or a designated representative for the purpose of auditing and verifying statements, performance, invoices, or bills submitted by Contractor pursuant to this contract and shall provide such assistance as may be reasonably required in the course of such inspection. Copies of such documents shall be provided to CITY for inspection at City's facility when it is practical to do so. Otherwise, unless an alternative is mutually agreed upon, the records shall be available at Contractor's address indicated for receipt of notices in the Agreement.

E. Where CITY has reason to believe that such records or documents may be lost or discarded due to dissolution, disbandment or termination of Contractor's business, CITY may, by written request, require that custody of the records be given to CITY and that the records and documents be maintained at City's facility. Access to such records and documents shall be granted to any party authorized by Contractor, Contractor's representatives, or Contractor's successor-in-interest.

F. Pursuant to California Government Code Section 8546.7, the parties to this Contract shall be subject to the examination and audit of representative of the Auditor General of the State of California for a period of three (3) years after final payment under the contract. The examination and audit shall be confined to those matters connected with the performance of this contract including, but not limited to, the cost of administering the contract.

SECTION GC-8 PROSECUTION AND PROGRESS

A. GENERAL

The prosecution and progress of the work shall conform to Section 8 of the Caltrans Standard Specifications and the Special Conditions.

B. SUBLETTING AND ASSIGNMENT

Attention is directed to Section 8-1.01 ("Subcontracting") of the Caltrans Standard Specifications which provides that the Contractor shall give personal attention to the performance of the Contract and shall keep the Work under its control.

No subcontractors will be recognized as such, and all persons engaged in the work of construction will be deemed employees of the Contractor. The Contractor will be held responsible for all subcontractors' work, which shall be subject to the provisions of the Contract and specifications.

When a portion of the work that has been subcontracted by the Contractor is not being prosecuted in a manner satisfactory to CITY, the subcontractor shall be removed immediately on the requisition of CITY and shall not again be employed on the work.

Attention is directed to Section 8-1.02 ("Assignment") of the Standard Specifications. The performance of the Contract may not be assigned except upon written consent of CITY.

C. COMMENCEMENT OF WORK, PROGRESS, AND TIME FOR COMPLETION

The Contractor shall begin work within ten (10) working days after the date specified on the Notice to Proceed and shall diligently prosecute the same to completion within the time set forth in these Contract Documents.

D. HOURS OF WORK, HOLIDAYS, AND OVERTIME.

The Contractor shall perform all work during the working hours of 7:30 a.m. to 6:00 p.m., Monday through Friday (unless otherwise noted below). If the Contractor wishes to work during any other hours or on weekends, the Contractor must obtain written permission from CITY. The request must be received at least two (2) working days in advance of any work.

No work will be allowed on CITY holidays except in an emergency. A listing of CITY holidays is available from the City Clerk's Office 13777 Fruitvale Avenue, Saratoga, California, 95070.

If Contractor requests overtime work in which CITY will incur costs, CITY reserves the right to bill the Contractor at time and one half to cover the costs incurred.

E. TEMPORARY SUSPENSION OF WORK

In accordance with Section 8-1.05 ("Temporary Suspension of Work") in the Caltrans Standard Specifications, the Director of Public Works or his designee shall have the authority to suspend the Work wholly or in part, for such a period as the Director of Public Works may deem necessary.

F. TIME OF COMPLETION AND LIQUIDATED DAMAGES

The Contractor shall complete all or any designated portion of the work called for under the contract in all parts and requirements within the time set forth in the Special Conditions.

The Contractor's attention is directed to Section 8-1.07 ("Liquidated Damages") of the Caltrans Standard Specifications which shall apply here. In addition to the foregoing liquidated damages, CONTRACTOR shall pay any fines, penalties or other monetary sanctions levied by any authority having jurisdiction over the Project on account of delays in completing the WORK not solely attributable to CITY, including but not limited to violations of discharge permit limits or other discharge restrictions.

The parties to the Contract agree that in case all the work called for under the Contract is not completed before or upon the expiration of the time limit as set forth in this Agreement damage will be sustained by the CITY. The parties further agree that it is and will be impracticable to determine the actual damage that the CITY will sustain in the event of and by reason of such delay. It is therefore agreed that the Contractor will pay to the CITY the sum stated in the Notice Inviting Bids for each and every calendar day's delay beyond the time prescribed to complete the work. The Contractor agrees to pay such liquidated damages as herein provided, and in case the same are not paid, agrees that the CITY may deduct the amount thereof from any monies due or that may become due the Contractor under the Agreement.

It is further agreed that if the work called for under the Contract is not finished and completed in all parts and requirements within the time specified, CITY shall have the right to extend the time for completion. CITY is under no obligation to extend the time for completion. If CITY decides to extend the time for completion, it shall further have the right to charge to the Contractor, his heirs, assigns or sureties, and to deduct from the final payment for the Work, all or any part, as it may deem proper, of the actual cost of engineering, inspection, superintendence, and other overhead expenses which are directly chargeable to the Contract, and which accrue during the period of such extension, except that the cost of final surveys and preparation of final estimate shall not be included in such charges.

The Contractor will not be assessed liquidated damages or the cost of engineering and inspection during a delay in the completion of the Work caused by acts of God (as defined in Public Contract Code Section 7105) or of the public enemy; fire; floods; epidemics; quarantine restrictions; strikes; freight embargoes; unusually severe weather; and/or delays of subcontractors due to such causes, provided that the Contractor within fifteen (15) days from the beginning of any such delay notifies the Director of Public Works in writing of the causes of delay. The Director of Public Works shall ascertain the facts and the extent of delay, and the Director of Public Work’s findings thereon shall be final and conclusive.

Except for the additional compensation provided for in Section 8-1.09 ("Right of Way Delays") of the Caltrans Standard Specifications, and except as provided in Public Contract Code Section 7102, the Contractor shall have no claim for damage or compensation for any delay or hindrance.

It is the intention of the above provisions that the Contractor shall not be relieved of liability for liquidated damages or engineering and inspection charges for any period of delay in

completion of the work in excess of that expressly provided for in Section 8-1.07 of the Caltrans Standard Specifications.

G. LIMITS OF WORK

The "limits of work" are shown on the plans (where applicable). The Contractor shall make its own arrangements, and pay all expenses for additional area required outside of the limits of work unless provided in the Special Conditions.

H. UTILITY FACILITIES

The Contractor shall protect from damage any utility facilities that are to remain in place, be installed, relocated, or otherwise rearranged.

If the Contractor while performing the Work discovers utility facilities not identified in the Contract Documents with reasonable accuracy, the Contractor shall immediately notify CITY and the utility owner. CITY shall arrange the removal, relocation, or protection of existing main or trunk line utility facilities located at the site of the Work but not identified in the Contract.

If the Contractor is required to locate, repair damage not due to the Contractor’s failure to exercise reasonable care, and remove or relocate existing main or trunk line utility facilities, it shall be compensated under Section 9-1.03 ("Force Account Payment") of the Caltrans Standard Provisions, including payment for equipment on the Project necessarily idled during such work.

Contractor will not be entitled to damages or additional payment for delays caused solely by the failure of CITY, or the owner of the utility, to provide for removal or relocation of existing main or trunk line utility facilities not identified in the Contract Documents, except for equipment necessarily idled during such work.

Contractor will not be assessed liquidated damages for delay in completing the work solely attributable to the failure of CITY, or the owner of the utility, to provide for removal or relocation of existing main or trunk line utility facilities not indicated in the Contract Documents.

The right is reserved by CITY and by the owners of facilities or their authorized agents to enter the job for the purpose of making such changes as are necessary for the rearrangement of their facilities or for making necessary connections or repairs to their properties. The Contractor shall cooperate with forces engaged in such work and shall conduct its operations in such a manner as to avoid any delay or hindrance to the work being performed by such other forces.

Attention is directed to the possible existence of underground facilities not known to CITY, or in a location different from that which is shown on the plans or in the Special Conditions. The Contractor shall take all steps reasonably necessary to ascertain the exact location of all underground facilities prior to doing work that may damage such facilities or interfere with their service, including but not limited to calling USA to mark utilities. See GC-7(L).

I. COMPENSATION

Full compensation for conforming to the requirements of this section shall be deemed included in the prices paid for the various contract items of work, and no separate payment will be made therefor, except that this provision does not constitute a waiver, alteration, or limitation of the applicability of California Public Contracts Code Section 7102.

SECTION GC-9 MEASUREMENT AND PAYMENT

A. GENERAL

Attention is directed to Section 9 ("Measurement and Payment") of the Caltrans Standard Specifications which includes procedures for determination of payments, compensation for extra work by force account, partial payments, and final payments.

B. SCOPE OF PAYMENT

The Contractor shall accept the compensation provided in the Contract as full payment for furnishing all labor, materials, tools, equipment, and incidentals necessary to the completed work and for performing all work contemplated and embraced under the contract; for loss or damage arising from the nature of the work, from the action of the elements, or from any unforeseen difficulties that may be encountered during the prosecution of the work until the acceptance by CITY; for all risks of every description connected with the prosecution of the work; for all expenses incurred in consequence of the suspension or discontinuance of the work as provided in the contract; and for completing the work according to the plans and specifications.

In accordance with Public Contract Code Section 9203, for any public work contract with a total cost greater than five thousand dollars ($5,000) progress payments shall not be made in excess of ninety-five percent (95%) of actual Work completed plus a like percentage of the value of material delivered on the ground or stored subject to, or under the control of, CITY, and unused.

In all contracts with subcontractors, the contractor shall comply with Public Contract Code Section 7200 regarding the percentage of retention proceeds withheld.

Neither the payment of any estimate nor of any retained percentage shall relieve the Contractor of any obligation to make good any defective work or material.

Contractor shall submit certified payroll reports with each payment request.

CITY shall review each payment request and tender payment in accordance with Public Contract Code Section 20104.50.
No compensation will be made in any case for loss of anticipated profits. Contractor shall include with each estimate for payment a “Conditional Waiver and Waiver and Release Upon Progress Payment” form as prescribed in Civil Code Section 3262 signed by all subcontractors, material suppliers, equipment lessors and other parties covering labor, materials, equipment or services included in the pay estimate. Within thirty (30) days of the date CITY makes payment to the Contractor on an estimate for payment, the Contractor

shall obtain and submit to Owner “Unconditional Waiver and Release Upon Progress Payment” in the form prescribed in Civil Code Section 3262 from the same subcontractors, suppliers, equipment lessors and others. These forms are included at the end of the General Conditions Section, following subsection GC-13.

C. EXTRA AND FORCE ACCOUNT WORK

Extra work as herein before defined, when ordered and accepted, shall be paid for under a written work order in accordance with the terms therein provided, and as provided in Section GC-4 (F) of the General Conditions. Payment for extra work will be made at the unit price or lump sum previously agreed upon in writing or by force account as provided in Section 9-1.03 ("Force Account Payment") of the Caltrans Standard Specifications.

D. STOP NOTICES

CITY, by and through appropriate City of Saratoga office or officers, may at its option and at any time retain out of any amounts due the Contractor, sums sufficient to cover claims stated in stop notices filed pursuant to Civil Code Sections 3179 et seq. and to provide for the cost of any litigation thereunder.

E. PAYMENT

Upon final approval and acceptance of the work by CITY, Contractor shall be paid all sums of money in accordance with the terms and conditions as outlined in the Contractor’s submittal of City’s Bid Form.

No such estimate or payment shall be construed to be an acceptance of any defective work or improper materials.

F. SUBSTITUTION OF SECURITIES FOR WITHHELD AMOUNTS

Pursuant to Public Contract Code Section 22300, the Contractor may substitute securities for any monies retained to ensure performance. At the request and expense of the Contractor, securities equivalent to the amount retained shall be deposited with CITY, or with a state or federally chartered bank in California as the escrow agent, and CITY shall then pay such monies to the Contractor. Alternatively, the Contractor may request that CITY make payment directly to the escrow holder, to be invested at the Contractor’s expense and direction.

Eligible securities shall include those listed in Government Code Section 16430, or bank or savings and loan certificates of deposit, interest bearing demand deposit accounts, standby letters of credit, or any other security mutually agreed to by the Contractor and CITY. The Contractor shall be the beneficial owner of any securities substituted for monies, and shall receive any interest on such securities.

Any escrow agreement shall be substantially similar in form to the form of escrow agreement included in Public Contract Code Section 22300(f).

G. FINALIZING PROGRESS PAYMENT

CITY shall, after the completion of all Work required under the Contract, make a final estimate of the amount of work done, and the value of such work, and CITY shall pay ninety percent (90%) of the entire sum so found to be due after deducting therefrom all previous payments and all amounts to be kept and all amounts to be retained under the provisions of the Contract Documents.

H. FINAL PAYMENT

The 10% retained by CITY after each progress payment is made shall be due and payable to the Contractor after the expiration of thirty-five (35) days from the date of recordation of the Notice of Completion following acceptance of the Work by CITY. It is expressly understood that said final payment or a portion thereof may not be paid to the Contractor if any stop notices are properly filed.

No certificate given or payments made under the Contract, except the final certificate or final payment, shall be conclusive evidence of the performance of the Contract, either wholly or in part, against any claim of CITY, and no payments shall be construed to be acceptance of any defective work or improper materials.

Payment by CITY of the final undisputed amount due under the Contract, including payment based upon adjustments for any work done in accordance with any alterations of the Contract Documents, shall be contingent upon the Contractor furnishing CITY with a release of all claims against CITY arising by virtue of the contract related to those amounts. In the event the Contractor has any such claims, such claims in stated amounts may be specifically excluded by the Contractor from the release, in which case the payment by CITY may be of only undisputed amounts.

I. REPAIR OR RECONSTRUCTION OF DEFECTIVE WORK

If, within a period of one (1) year after final acceptance of the work performed under this contract, any structure furnished, installed, constructed, and/or caused to be installed or constructed by the Contractor, or any of the work done under this contract, fails to fulfill any of the requirements of the Contract Documents, the Contractor shall without delay and without any cost to CITY, repair, replace or reconstruct any defective or otherwise unsatisfactory part or parts of the Work. Should the Contractor fail to act promptly or in accordance with this requirement, or should the situation require that repairs or replacements be made before the Contractor can be notified, CITY may, at its option, make the necessary repairs or replacements or perform the necessary work and the Contractor shall pay to CITY the actual cost of such repairs plus 25%.

J. FISCAL AGENT PAYMENT

With certain exceptions, all monies for the progress payments and final payment under the contract will be sent to the Contractor. CITY will send, by first-class mail, warrants payable to the Contractor to the mailing address specified on the separate payment request certified and approved by CITY.

K. CLAIMS PROCEDURES

Attention is directed to the provisions in Section 9 ("Measurement and Payment") of the Caltrans Standard Specifications regarding notice of claims or potential claims, which shall apply to any and all claims, including requests for additional compensation and/or an adjustment in the time for performing the Work. Claims shall be resolved by arbitration as described in Section 9-1.10 of the Caltrans Standard Specifications.

SECTION GC-10 DUST CONTROL

The Contractor shall provide suitable means for dust control by applying either water or dust palliative for operations within the limits of the Work. Dust control work shall be performed in such manner to prevent dust at all times, including during non-working hours. Full compensation for providing dust control shall be deemed included in the prices paid for the various contract items of work, and no separate payment will be made therefor.

If dust control is not performed in a manner satisfactory to the Director of Public Works, then either (i) work shall be suspended until the dust control measures are sufficient or (ii) dust control may be performed by CITY, or its designee, and CITY will deduct all costs it incurs performing dust control plus twenty-five percent (25%) from amounts due or that become due to Contractor.

SECTION GC-11 RESERVED

SECTION GC-12 DIFFERING SITE CONDITIONS

The Contractor shall promptly, and before the following conditions are disturbed, notify CITY in writing of any:

a) Material that the Contractor believes may be hazardous waste, as defined in California Health and Safety Code Section 25117, that is required to be removed to a Class I, Class II, or Class III disposal site in accordance with provisions of existing law;

b) Subsurface or latent physical conditions at the site differing materially from those indicated in the Contract Documents; or

c) Unknown physical conditions at the site of any unusual nature, differing materially from those ordinarily encountered and generally recognized as inherent in work of the character provided for in the Contract Documents.

CITY shall promptly investigate the conditions. If it finds that such conditions do materially differ from conditions indicated in the Contract Documents or ordinarily encountered in work of this character, or do involve hazardous waste, and cause an increase or decrease in the Contractor's costs or the time needed to perform any part of the Work, CITY shall issue a change order under the provisions described in the Contract Documents. No claim of the Contractor under this clause shall be allowed unless the Contractor has given the notice required in the Contract Documents. In the event a dispute arises between CITY and the

Contractor as to whether the conditions materially differ, or involve hazardous waste, or cause a decrease or increase in the Contractor's costs or the time needed to perform any part of the Work, Contractor shall not be excused from completing the Work as provided in the Contract Documents. The Contractor shall proceed with all work to be performed under the Contract Documents. The Contractor shall retain any and all rights provided either by the Contract Documents or by law that pertain to the resolution of disputes and protests.

SECTION GC-13 ARCHAEOLOGICAL EXAMINATION

If archaeological materials are uncovered during grading, trenching or other excavation, earthwork within 100 feet of these materials shall be stopped until a professional archaeologist certified by the Society of California Archaeology (SCA) and/or by the Society of Professional Archaeology (SOPA) has had an opportunity to evaluate the significance of the find and to suggest appropriate mitigation measures as necessary.

In the event the work of archaeological examination and related work delays the Contractor's work, he shall be entitled to an extension of time to complete the work equal to the number of working days the Work is thus delayed. However, the Contractor shall have no claim for compensation as a consequence of delay of the Work for the period of time required by CITY for such archaeological examination and related work.

CONDITIONAL WAIVER AND RELEASE UPON PROGRESS PAYMENT

Upon receipt by the undersigned of a check from _____ (Maker of Check) in the sum of $_____ (Amount of Check) payable to _____ _____ _____(Payee or Payees of Check) and when the check has been properly endorsed and has been paid by the bank upon which it is drawn, this document shall become effective to release any mechanic's lien, stop notice, or bond right the undersigned has on the job of CITY located at_____ (Job Description) to the following extent. This release covers a progress payment for labor, services, equipment or material furnished to_____ (Your Customer) through _____ (Date) only and does not cover any retentions retained before or after the release date; extras furnished before the release date for which payment has not been received; extras or items furnished after the release date. Rights based upon work performed or items furnished under a written change order that has been fully executed by the parties prior to the release date are covered by this release unless specifically reserved by the claimant in this release. This release of any mechanic’s lien, stop notice, or bond right shall not otherwise affect the contract rights, including rights between parties to the contract based upon a rescission, abandonment, or breach of the contract, or the right of the undersigned to recover compensation for furnished labor, services, equipment, or material covered by this release if that furnished labor, services, equipment, or material was not compensated by the progress payment. Before any recipient of this document relies on it, said party should verify evidence of payment to the undersigned.

DATED: _____, 20__

By _____

Its _____

CONDITIONAL WAIVER AND RELEASE UPON FINAL PAYMENT

Upon receipt by the undersigned of a check from _____ in the sum of $_____ payable to_____ _____ and when the check has been properly endorsed and has been paid by the bank upon which it is drawn, this document shall become effective to release any mechanic's lien, stop notice, or bond right the undersigned has on the job of the City of Saratoga located at _____ (Job Description). This release covers the final payment to the undersigned for all labor, services, equipment or material furnished on the job, except for disputed claims for additional work in the amount of $_____. Before any recipient of this document relies on it, the party should verify evidence of payment to the undersigned.

DATED: _____

By _____

Its _____

UNCONDITIONAL WAIVER AND RELEASE UPON PROGRESS PAYMENT

The undersigned has been paid and has received a progress payment in the sum of $_____ for labor, services, equipment or material furnished to _____ (Your Customer) on the job of City of Saratoga located at_____ (Job Description) and does hereby release any mechanic's lien, stop notice, or bond right that the undersigned has on the above referenced job to the following extent. This release covers a progress payment for labor, services, equipment, or materials furnished to _____ (Your Customer) through _____ (Date) only and does not cover any retentions retained before or after the release date; extras furnished before the release date for which payment has not been received; extras or items furnished after the release date. Rights based upon work performed or items furnished under a written change order that has been fully executed by the parties prior to the release date are covered by this release unless specifically reserved by the claimant in this release. This release of any mechanic's lien, stop notice, or bond right shall not otherwise affect the contract rights, including rights between parties to the contract based upon a rescission, abandonment, or breach of the contract, or the right of the undersigned to recover compensation for furnished labor, services, equipment, or material covered by this release if that furnished labor, services, equipment, or material was not compensated by the progress payment.

DATED: _____

By _____

Its _____

NOTICE: THIS DOCUMENT WAIVES RIGHTS UNCONDITIONALLY AND STATES THAT YOU HAVE BEEN PAID FOR GIVING UP THOSE RIGHTS. THIS DOCUMENT IS ENFORCEABLE AGAINST YOU IF YOU SIGN IT, EVEN IF YOU HAVE NOT BEEN PAID. IF YOU HAVE NOT BEEN PAID, USE A CONDITIONAL RELEASE FORM.

UNCONDITIONAL WAIVER AND RELEASE UPON FINAL PAYMENT

The undersigned has been paid in full for all labor, services, equipment or material furnished to: _____ (Your Customer) on the job of the City of Saratoga located at _____ (Job Description) and does hereby waive and release any right to a mechanic's lien, stop notice, or any right against a labor and material bond on the job, except for disputed claims for extra work in the amount of $_____.

DATED: _____ .

By _____

Its _____

NOTICE: THIS DOCUMENT WAIVES RIGHTS UNCONDITIONALLY AND STATES THAT YOU HAVE BEEN PAID FOR GIVING UP THOSE RIGHTS. THIS DOCUMENT IS ENFORCEABLE AGAINST YOU IF YOU SIGN IT, EVEN IF YOU HAVE NOT BEEN PAID. IF YOU HAVE NOT BEEN PAID, USE A CONDITIONAL RELEASE FORM

SPECIAL CONDITIONS

1. SPECIAL QUALIFICATIONS

Contractor is advised that in addition to the standard qualifications, the following additional specialty qualifications apply to this Contract:

2. SPECIALTY WARRANTIES

In addition to the standard Warranties for overall workmanship and landscaping work identified in General Conditions Section GC 2O, the following specialty warranties are required:

None

3. AWARD

The award of the contract, if it is to be awarded, will be to the lowest responsive responsible bidder whose proposal complies with all the requirements of the bid documents. The low bid will be determined based upon: Sum of base bid and all add alternatives. The City will consider all add alternatives in determining the low bid, but may not elect to include all of the alternatives in the work.

4. ORDER of WORK

The Contractor shall provide for the orderly progression of work. The Contractor is advised of the following constraints or City requirements with respect to order of work: Order of work will be coordinated with and approved by City's Project Inspector and Project Engineer

5. LIMITS of WORK

Contractor is advised that the City will provide off-site areas for Contractor activities as follows:

None

6. TESTING

Contractor is advised that the following special testing requirements apply:

7. SOUND CONTROL

Contractor shall implement the following sound control measures:

8. PERMITS AND LICENSES

The Contractor is required a City of Saratoga Business License prior to commencing work. If the add alternatives from the bid schedule are required, then the Contractor is required to obtain a Department of Transportation (Caltrans) Encroachment Permit at no extra cost to the City. The City of Saratoga has obtained the following permits in connection with the Work:

9. PUBLIC CONVENIENCE & SAFETY

The contractor will meet with businesses prior to commencing work. Businesses will remain open during construction, and close coordination with the City and business owners will be essential. Contractors will be required to minimize construction impacts to the surrounding business and residential communities.

10. HOURS of WORK

Two (2) lanes of traffic shall be maintained at all times between the hours of 4:00 PM and 9:00 AM. Traffic may be restricted to one (1) lane only between the hours of 9:00 AM and 4:00 PM. Contractor is advised that operations may be performed outside the normal hours (7:30 am to 6:00 pm Monday-Friday) of work only as follows: Special written permission of City Manager.

11. MITIGATION MEASURES

As part of the environmental review process, the City of Saratoga has agreed to the following mitigation measures, which measures are part of the Work: Waste Management Plan Appendix B.

12. MILESTONES and SCHEDULES

A. Construction Progress Schedule.

The Contractor shall prepare and submit the Contractor's Initial Construction Schedule within ten (10) calendar days after the issuance of the Notice to Proceed. The Initial Construction Schedule shall be in a form acceptable to the Engineer, and shall be produced using Microsoft Projects or other software acceptable to CITY. Contractor shall provide the Initial Schedule in electronic format acceptable to City.

Activity durations shall be the total number of actual days required to perform the work including consideration of weather impacts. Area codes shall distinguish construction activities related to individual buildings or areas within buildings (i.e. locker rooms) and site work.

Contractor staff preparing schedules shall be qualified and experienced in the scheduling method specified and capable of fulfilling the scheduling requirements of this section for the duration of the contract.

The Engineer will meet with the Contractor to review and comment on the Contractor's Initial Schedule within five (5) days of its receipt. The Contractor will finalize and re-submit the schedule within five (5) days of the review meeting. Upon favorable review by the Director of Public Works, the Initial Schedule will become the project Baseline Contract Schedule. The Baseline Schedule shall not be revised without written approval of the City. CITY shall have the right to withhold progress payments from the Contractor at its discretion if the Contractor fails to finalize and obtain approval for the Baseline Contract Schedule within the prescribed period.

Failure of the Contractor to incorporate all elements of work required for the performance of the contract or any inaccuracy in the Baseline Contract Schedule shall not excuse the Contractor from performing all work required for a completed project within the specified contract time period, notwithstanding CITY ‘s Representatives favorable review of the Baseline Contract Schedule.

B. Monthly Interval Updates.

The Contractor shall submit an up dated Schedule of the work at least once each month. The schedule shall be submitted no later than five (5) working days from the first of the month and shall be submitted both on paper and on disc. Schedule updates are an essential part of each progress payment application. CITY will not process progress payment applications without an updated schedule in the specified format.

The monthly schedule updates shall include:

The Contractor's estimated percentage complete (progress) for each activity in progress.

Actual start/finish dates for activities.

Identification of errors, if any, from the previous updated schedule.

The Schedule Update Reports shall consist of:

A bar chart showing the previous month's work and a three (3) month projection of upcoming work. The data included on the bar chart shall consist of the activity number, activity description, early start and finish date, original duration, remaining duration, percent complete, and total float.

A CPM tabular report sorted by responsibility, early start date that includes activity number, activity description, original duration, remaining duration, early and late start dates, early and late finish dates, total float, percent complete, activity budget cost, and activity earned cost.

The Schedule Reports shall consist of:

Time scaled network logic diagram(s) reflecting the activities, the interrelationships and logic ties between activities, activity duration and float. The diagram(s) shall be organized by Area. Diagrams shall be no smaller than "D" size (24" x 36") and no larger than "E" size (36" x 48").

A CPM tabular report sorted by responsibility, early start date that includes Activity number, activity description, original duration, remaining duration, early and late start dates, early and late finish dates, total float, percent complete, activity budget cost, and activity earned cost.

Contractor shall submit with each schedule update an updated electronic version.

C. Short Interval Schedule

Short Interval Schedules (SIS) shall be submitted to the Engineer at every weekly site meeting. The Interval shall be three weeks and shall include the past week, the week submitted and the week thereafter. The SIS may be prepared by hand. The SIS shall be based on the Contract Schedule and shall be in bar chart form. The SIS shall be in sufficient detail to evaluate the Contractor's performance in the preceding week and planned progress in upcoming weeks vis a vis the Contract Schedule and Updates thereof.

D. Float Time

Float or slack time is defined as the amount of time between the earliest start date and the latest start date or the earliest finish date and the latest finish date of a scheduled activity. Float or slack time is not for the exclusive use or benefit of either the Contractor or CITY. The Contractor acknowledges and agrees that actual delays affecting path of activities containing float will not have any effect upon the Contract completion date, provided that the actual delay does not exceed the float time associated with those activities.

E. Construction Schedule Revisions

If during the process of schedule updating it becomes apparent that the Construction Schedule no longer represents the actual prosecution and progress of the work, City may require the Contractor to submit a revised schedule at no additional cost to CITY. CITY shall have the right to withhold progress payments

from the Contractor at its discretion, if the Contractor fails to submit a timely, detailed and workable schedule. Updating the construction schedule to reflect actual progress shall not be considered to be a revision of the Schedule.

If actual progress of the Work falls fourteen (14) days behind the most recent schedule update favorably reviewed by Engineer, Contractor shall prepare and submit a recovery schedule within five (5) working days of a written request to explain and display how Contractor intends to reschedule activities (including increasing working hours, shifts, days, or equipment) to regain compliance with the Construction Schedule.

F. Final CPM Schedule at Completion of Contract

At the completion of the contract and prior to the release of any bonds or final payment by CITY, the Contractor shall submit a final CPM schedule, showing the actual sequence and duration of activities.

G. Early Completion of Project

In the event the Contractor wishes to complete work earlier than the specified contract completion date, and CITY and Director of Public Works approve such earlier completion, the following conditions apply:

Approval by CITY of Contractor's proposed earlier completion date shall not change the contract completion date. Contractor shall not, under any circumstances, receive additional compensation from CITY for indirect, general, administrative or other forms of overhead costs, for the period between the time of earlier completion proposed by the Contractor and the official contract completion date.

H. Time Extension Requests

The monthly Updated construction schedules submitted by the Contractor shall not show a completion date later than the Contract Time, subject to any time extensions granted by CITY.

If the Contractor believes that it is entitled to an extension of the Contract Time due to a Change Order, delay/disruption or other event beyond its control, the Contractor, within ten (10) working days of the qualifying event(s), shall submit:

1. A Time Extension Request notification letter with a detailed narrative justifying the time extension requested;

2. Analysis of the delay impact, identifying all schedule activities that are affected by the subject occurrence;

3. A tabular report of the qualifying schedule the analysis is based on; and

4. A schedule analysis entitled "Time Extension Request Schedule" that incorporates the findings of the analysis of delay impact into the latest update of the project schedule.

Time extension request schedules shall be time scaled, utilizing a computer generated network analysis unless otherwise approved by the Director of Public Works. The time extension request shall forecast the adjusted project completion date and impact to any intermediate milestones.

Contract time extensions shall be granted only to the extent the equitable time adjustments to the activity or activities affected by a change order or delay/disruption exceed the total float of a critical activity (or path) and extend the Contract Completion Date.

When Contractor does not submit a Time Extension Request within ten (10) working days, it is mutually agreed that the particular Change Order (including Proposed Change Order) or delay/disruption does not affect the construction schedule and hence no time extension is due to the Contractor.

CITY shall have no obligation to consider any time extension request if the Contractor does not comply with the requirements of the Contract Documents. CITY shall not be responsible or liable to the Contractor for any constructive acceleration due to failure of CITY to grant time extensions under the terms of this contract, should Contractor fail to comply with the time extension submission and justification requirements stated herein.

STATEMENT OF EXPERIENCE AND QUALIFICATIONS

CONTRACTOR'S EXPERIENCE AND QUALIFICATIONS

The following statements as to the experience and qualifications of the bidder are to be submitted with the Contract Bid, as a part thereof. The bidder warrants that the information provided is true and accurate.

The bidder has been engaged in the contracting business, under the present business name, for _____ years. Experience in work of a nature similar to that covered in the Bid extends over a period of _____ years.

The bidder, as a contractor, has successfully completed at least two (2) projects of like magnitude, comparable difficulty and rates of progress to the work, including: (list two or more projects).

_____

_____

_____

_____

The bidder, as a contractor, has never failed to satisfactorily complete a contract awarded to the Contractor, except as follows: (name any and all exceptions and reasons therefor).

_____

_____

_____

_____

The bidder has satisfactorily completed the following contracts in the last three (3) years, for the owner indicated, and to whom reference is made (list five contracts). (Provide a contact person and telephone number for each project.)

CONTRACT	YEAR	TYPE OF WORK	AMOUNT	CONTACT

The names of all persons interested in the foregoing bids as principals are as follows: (NOTE: If Bidder or other interested person is a corporation, state the legal name of the corporation, along with the names of the president, secretary, treasurer, and manager thereof; if a general partnership, state true name of the firm, also the names of all individual partners composing the firm; if a limited partnership, the names of all general partners and limited partners; and if Bidder or other interested person is an individual, state first and last names in full.)

_____

_____

_____

_____

Contractor's License Number:

_____

License Renewal Date:

_____

BID FORM

CONTRACT BID
TO
CITY OF SARATOGA

FOR
SARATOGA VILLAGE PEDESTRIAN ENHANCEMENT STREET LIGHT WORK PROJECT

Name of Bidder _____ of
Business Address _____
Telephone (___) _____ and (___) _____ Facsimile (___) _____

TO THE CITY COUNCIL OF THE CITY OF SARATOGA:

Pursuant to and in compliance with your Notice Inviting Bids for **SARATOGA VILLAGE PEDESTRIAN ENHANCEMENT STREET LIGHT WORK PROJECT**, and the other Contract Documents relating thereto, the undersigned Bidder, being fully familiar with the terms of the Contract Documents, the current general prevailing wage rates, local conditions affecting the performance of the Project, the character, quality, quantities and scope of the work, and the cost of the work at the place of performance, hereby proposes and agrees, within the time stipulated in the Contract Documents, to furnish to the City of Saratoga all of the transportation, materials, equipment, tools, excavation, sheeting, shoring, bracing, supports, plant and other facilities, labor, services, permits, utilities, and other items necessary to conduct and complete said work, all in strict conformity with the Contract Documents, including Addenda Nos. ___, ____, and ____ on file at the City of Saratoga Public Works Department, for the total price of _____dollars ($_____).

Pursuant to Labor Code Section 6705, if the work to be performed includes trenching or excavation more than five feet (5') in depth and the total contract price exceeds twenty-five thousand dollars ($25,000), the Contractor must submit and the Director of Public Works must approve in advance of excavation a detailed plan showing the design of shoring, bracing, sloping, or other provisions to be made for worker protection from the hazard of caving ground during the excavation of such trench or trenches.

Pursuant to Labor Code Section 6707, if the work to be performed includes trenching or excavation more than five feet (5') in depth, each bid must contain, set forth as a separate bid item, sheeting, shoring, and bracing or equivalent method for protecting workers.

Sheeting, shoring or bracing: _____ dollars ($_____)
(All such costs are included in the total price set forth above.)

Bidder acknowledges receipt of the following addendum or addenda during the bidding period and represents that the information contained in the addendum or addenda has been considered in the preparation of this bid proposal: Addendum _____.

NOTE: failure to acknowledge receipt of all addenda may be considered an irregularity in the bid proposal.

Bidder declares that the only persons or parties interested in this bid are those named herein, and that this bid is made without collusion with any person, firm or corporation. Bidder proposes and agrees, if the bid is accepted, that Bidder will execute a contract with CITY, in strict conformity to the Contract Documents, in the form set forth in the Contract Documents, and will perform the entire work for the prices set forth in the attached Bid Schedule, upon which the award of contract is made.

SARATOGA VILLAGE PEDESTRIAN ENHANCEMENT STREET LIGHT WORK PROJECT

BASE BID:

ITEM	QUANT	UNIT	DESCRIPTION	UNIT PRICE	PRICE
1	60	EA.	Install and supply the new street light poles with base plate.		
2	35	EA.	Remove existing street light poles with light fixtures and electrical wires. Install and supply the new street light poles with base plates.		
3	1	Lump Sum.	TRAFFIC CONTROL		
4	95	EA.	Install the LED street light fixtures and connect the new electrical wires from fixture to point of electrical connection at the adjacent electrical pull boxes. The LED streetlight fixtures will be supplied by the City.		
5	4270	LF	Install and pull new electrical wire (10 gage) in the conduits and connect the new electrical wires to the point electrical connection, at the adjacent electrical pull boxes and the existing meter boxes.		
6	1	Lump Sum.	Waste Management Plan (Dispose of the all waste generated by the process of the project).		
TOTAL BASE BID SUBTOTAL CONTRACT ITEMS					

ADD ALTERNATIVES:

ITEM	QUANT	UNIT	DESCRIPTION	UNIT PRICE	PRICE
7	4270	LF	Saw cut or rock wheel a trench, place 2 inch PVC schedule 40 conduit and back fill (Slurry Mix) trench and repave the street per City of Saratoga Restoration Of Utility Excavations		
8	380	LF	Remove and replace vertical curb and gutter (V-24).		
9	2380	SQ.FT	Remove and replace concrete sidewalk.		
10	380	LF	Remove and replace AC one foot wide at 6 inches deep (offset 1 ft from lip of gutter).		
11	60	EA.	Install electrical pull boxes (Christy N09).		
12	60	EA.	Install new concrete street light pole bases.		
TOTAL ALL ADD ALTERNATIVES CONTRACT ITEMS					
SUM OF BASE BID AND ALL ADD ALTERNATIVES CONTRACT ITEMS					

BID BOND

KNOWN ALL PERSONS BY THESE PRESENTS that,

_____
hereinafter called the PRINCIPAL, and _____, a corporation duly organized under the laws of the State of having its principal place of business at _____ in the State of
and authorized to do business in the State of California, hereinafter call the SURETY, are held and firmly bound unto the City of Saratoga, hereinafter called the OBLIGEE, on order, in the sum of
_____Dollars ($_____) (being at least ten percent (10%) of the total amount of PRINCIPAL 's bid) lawful money of the United States, for the payment of which we bind ourselves, our heirs, executors, administrators, successors, and assigns, jointly and severally, firmly by these present.

THE CONDITIONS OF THIS OBLIGATION ARE SUCH THAT:

WHEREAS, the PRINCIPAL has submitted its Bid for the project entitled **SARATOGA VILLAGE PEDESTRIAN ENHANCEMENT STREET LIGHT WORK PROJECT** to the OBLIGEE, said Bid, by reference thereto; being hereby made a part hereof.

NOW, THEREFORE, if said Bid is rejected or, in the alternative, if said Bid is accepted and the PRINCIPAL signs and delivers a Contract and furnishes a Performance Bond and Payment Bond, in the form and within the time required by the Bid and the Contract Documents, then this obligation shall become null and void, otherwise the same shall remain in full force and effect and upon default of the PRINCIPAL shall be forfeited to the OBLIGEE, it being expressly understood and agreed that the liability of the SURETY for any and all default of the PRINCIPAL shall be the amount of this obligation as herein stated, as liquidated damages. Such forfeiture and liquidated damages under this bond shall be without prejudice to the OBLIGEE’S right to pursue any excess actual damages from the PRINCIPAL for breach of contract or otherwise.

The SURETY, for value received, hereby agrees that the obligations of said SURETY and its bond shall not be impaired or affected by any extension of the time within which the OBLIGEE may accept such Bid, and the SURETY hereby waives notice of any such extension.

In the event suit is brought upon this bond by the OBLIGEE and judgment is recovered, the SURETY shall pay, in addition to the sum set forth above, all costs incurred by the OBLIGEE in such suit, including reasonable attorney's fees and expert witness fees, to be fixed by the court.

Signed this _____ day of _____, 2012

_____
PRINCIPAL

BY _____

_____
SURETY

BY _____

Note: Signature of person executing for SURETY must be notarized and evidence of corporate authority attached.

FAITHFUL PERFORMANCE BOND

KNOW ALL PERSONS BY THESE PRESENTS:

WHEREAS, the City of Saratoga, California (hereinafter referred to as "Owner") and _____, (hereinafter referred to as "Contractor"), have entered into a written contract for furnishing of all labor, materials, equipment, transportation and services for the construction of the **SARATOGA VILLAGE PEDESTRIAN ENHANCEMENT STREET LIGHT WORK PROJECT** (hereinafter referred to as the "Construction Contract"); and

WHEREAS, Contractor is required by the terms of the Construction Contract to furnish a bond for the faithful performance of all terms and conditions of the Construction Contract;

NOW, THEREFORE, Contractor, as principal, and _____ (hereinafter referred to as "Surety"), as surety, are held and firmly bound unto Owner in the penal sum of _____ Dollars ($ _____), lawful money of the United States, for the payment of which sum well and truly to be made as provided in this Performance Bond.

1. Contractor and Surety, jointly and severally, bind themselves, their heirs, executors, administrators, successors and assigns to Owner for the performance of the Construction Contract, which is incorporated herein by reference.

2. If Contractor timely performs each and every obligation under the Construction Contract, Surety and Contractor shall have no obligation under this Bond, except to participate in conferences as provided in Subparagraph 3.1.

3. Surety's obligation under this Performance Bond shall arise after:

3.1 Owner has declared a Contractor Default and has notified Contractor and Surety at its address described in Paragraph 10 below that Owner has declared a Contractor Default and has requested and attempted to arrange a conference with Contractor and Surety to be held not later than seven days after receipt of such notice to discuss methods of performing the Construction Contract; and

3.2 Owner has agreed to pay the Balance of the Agreement Price, as calculated under the terms of the Construction Contract, to Surety in accordance with the terms of the Construction Contract or to a contractor selected to perform the Construction Contract in accordance with the terms of the Construction Contract with Owner.

4. When Owner has satisfied the conditions of Paragraph 3, Surety shall promptly and at Surety's expense take one of the following actions:

4.1 Arrange for Contractor, with consent of Owner, to perform and complete the Construction Contract; or

4.2 Undertake to perform and complete the Construction Contract itself, through its agents or through independent contractors; or

4.3 Obtain bids or negotiated bids from qualified contractors acceptable to Owner for a contract for performance and completion of the Construction Contract, arrange for a contract to be prepared for execution by Owner and the contractor selected with Owner's concurrence, to be secured with performance and payment bonds executed by a qualified surety equivalent to the bonds issued on the Construction Contract, and pay to Owner the amount of damages as described in Paragraph 6 in excess of the Balance of the Agreement Price, as calculated under the terms of the Construction Contract, incurred by Owner resulting from Contractor's Default; or

4.4 Waive its right to perform and complete, arrange for completion, or obtain a new Contractor and with reasonable promptness under the circumstances:

1. After investigation, determine the amount for which it may be liable to Owner and, as soon as practicable after the amount is determined, tender payment thereof to Owner; or

2. Deny liability in whole or in part and notify Owner citing specific reasons therefor.

5. If Surety does not proceed as provided in Paragraph 4 within twenty days from receipt of the notice described in paragraph 3.1 (whether or not a conference has been held pursuant to paragraph 3.1), or such longer period upon which Owner and Surety may agree in writing, Surety shall be deemed to be in default on this Bond. If the Surety proceeds as provided in Subparagraph 4.4, and Owner refuses the payment tendered or the Surety has denied liability, in whole or in part, without further notice Owner shall be entitled to enforce any remedy available to Owner.

6. After Owner has declared a Contractor Default, and if Surety elects to act under Subparagraph 4.1, 4.2, or 4.3 above, then the responsibilities of Surety to Owner shall not be greater than those of Contractor under the Construction Contract, and the responsibilities of Owner to Surety shall not be greater than those of the Owner under the Construction Contract. To the limit of the amount of this Performance Bond, but subject to commitment by Owner of the Balance of the Agreement Price to mitigation of costs and damages on the Construction Contract, Surety is obligated without duplication for:

6.1 The responsibilities of Contractor for correction of defective work, materials and equipment and completion of the Construction Contract;

6.2 Additional legal, design professional, construction management and delay costs resulting from the Contractor's Default, and resulting from the actions or failure to act of the Surety under Paragraph 4; and

6.3 Liquidated damages, or if no liquidated damages are specified in the Construction Contract, actual damages caused by delayed performance or non-performance of Contractor.

7. Surety shall not be liable to Owner or others for obligations of Contractor that are unrelated to the Construction Contract, and the Balance of the Agreement Price shall not be reduced or set off on account of any such unrelated obligations. No right of action shall accrue on this Bond to any person or entity other than Owner or its heirs, executors, administrators or successors.

8. Surety hereby waives notice of any change, including changes of time, to the Construction Contract or to related subcontracts, purchase orders and other obligations.

9. Any proceeding, legal or equitable, under this Bond may be instituted in any court of competent jurisdiction. The prevailing party in any such action shall be entitled to recover its attorneys' fees, to be taxed as an item of costs.

10. Notice to Surety, Owner or Contractor shall be mailed or delivered to the address, or sent via facsimile to the facsimile number, shown on the signature page.

11. DEFINITIONS

11.1 Balance of the Agreement Price: The total amount payable by Owner to Contractor under the Construction Contract after all proper adjustments have been made, including allowance to Contractor of any amounts received or to be received by Owner in settlement of insurance or other claims for damages to which Contractor is entitled, reduced by all valid and proper payments made to or on behalf of Contractor under the Construction Contract.

11.2 Construction Contract: The agreement between the Owner and the Contractor identified on the first page of this bond, including all Contract Documents and changes thereto.

11.3 Contractor Default: Failure of the Contractor, which has neither been remedied nor waived, to perform or otherwise to comply with the terms of the Construction Contract.

CONTRACTOR, as Principal	SURETY
By: _____	By: _____
Its:_____	Its: _____
Address: _____	Address: _____
_____	_____
_____	_____
_____	_____
FAX: _____	FAX: _____

Note: Signatures of those executing for Surety must be properly acknowledged. The bond must be accompanied by a power of attorney from the Surety authorizing its agent to bind it to this bond.

LABOR AND MATERIALS PAYMENT BOND

KNOW ALL PERSONS BY THESE PRESENTS:

WHEREAS, the City of Saratoga, California (hereinafter referred to as "Owner") and _____ (hereinafter referred to as "Contractor"), have entered into a written contract for furnishing of all labor, materials, equipment, transportation and services for the construction of the **SARATOGA VILLAGE PEDESTRIAN ENHANCEMENT STREET LIGHT WORK PROJECT** (hereinafter referred to as the "Construction Contract"); and

WHEREAS, Contractor is required by the terms of the Construction Contract to furnish a bond to secure payment for all work, labor, materials, equipment or services furnished in connection with the Construction Contract;

NOW, THEREFORE, Contractor, as principal, and _____ _____ (hereinafter referred to as "Surety"), as surety, are held and firmly bound unto Claimants, as defined herein, in the penal sum of _____ _____ Dollars ($), lawful money of the United States, for the payment of which sum well and truly to be made as provided in this Payment Bond.

1. Contractor and Surety, jointly and severally, bind themselves, their heirs, executors, administrators, successors and assigns to Owner to pay for work, labor, materials, equipment, services, or other items furnished for use and actually used in the performance of the Construction Contract, which is incorporated herein by reference.

2. With respect to Owner, this obligation shall be null and void if Contractor:

2.1 Promptly makes payment, directly or indirectly, for all sums due Claimants, and

2.2 Defends, indemnifies and holds Owner harmless from claims, demands, liens or suits by any person or entity whose claim, demand, lien or suit is for the payment for work, labor, materials, equipment, services or other items furnished for use in the performance of the Construction Contract, provided Owner has promptly notified Contractor and Surety (at the address described in Paragraph 12) of any claims, demands, liens or suits and tendered defense of such claims, demands, liens or suits to Contractor and Surety.

3. With respect to Claimants, this obligation shall be null and void if Contractor promptly makes payment, directly or indirectly, for all sums due.

4. Surety shall have no obligation to Claimants under this Bond until:

4.1 Claimants who are employed by or have a direct contract with Contractor have given notice to Surety (at the address described below) and sent a copy, or notice thereof, to Owner, stating that a claim is being made under this Payment Bond and, with substantial accuracy, the amount of the claim.

4.2 Claimants who do not have a direct contract with the Contractor:

1. Have furnished written notice to Contractor and sent a copy, or notice thereof, to Owner, as required by and conforming with Civil Code Sections 3252 and 3091; and

.2 Not having been paid within thirty (30) days of sending the required notice, have sent a written notice to Surety (at the address described below) and sent a copy to the Owner, stating that a claim is being made under this Payment Bond and enclosing a copy of the previous written notice furnished to Contractor.

5. When the Claimant has satisfied the conditions of Paragraph 4, Surety shall promptly and at Surety's expense take the following actions:

5.1 Send an answer to the Claimant, with a copy to Owner, within 20 days after receipt of the claim, stating the amounts that are undisputed and the basis for challenging any amounts that are disputed.

5.2 Pay or arrange for payment of any undisputed amounts.

6. Surety's total obligation shall not exceed the amount of this Payment Bond, and the amount of this Payment Bond shall be credited for any payments made in good faith by Surety.

7. Amounts owed by Owner to Contractor under the Construction Contract shall be used for the performance of the Construction Contract and to satisfy claims, if any, under the Performance Bond. By Contractor furnishing and Owner accepting this Payment Bond, they agree that all funds earned by Contractor in the performance of the Construction Contract are dedicated to satisfy obligations of Contractor and Surety under this Bond, subject to the Owner's priority to use the funds for the completion of the work or the satisfaction of Owner's claims, including liquidated damages, under the Construction Contract.

8. Surety shall not be liable to Owner, Claimants or others for obligations of the Contractor that are unrelated to the Construction Contract. Owner shall not be liable for payment of any costs or expenses of any Claimants under this Payment Bond, and shall have under this Payment Bond no obligation to make

payments to, give notices on behalf of, or otherwise have any obligation to Claimants under this Payment Bond.

9. Surety hereby waives notice of any change, including changes of time, to the Construction Contract or to related subcontracts, purchase orders and other obligations.

10. No suit or action shall be commenced by a Claimant under this Bond other than in a court of competent jurisdiction. The prevailing party in any such action shall be entitled to recover its attorneys' fees, to be taxed as costs.

11. Notice to Surety, Owner or Contractor shall be mailed or delivered to the address shown on the signature page.

12. This Payment Bond has been furnished to comply with Civil Code Sections 3247 through 3252. Any provision in this Payment Bond conflicting with those statutory requirements shall be deemed deleted and provisions conforming to such statutory or other legal requirement shall be deemed incorporated herein. The intent is that this Payment Bond shall be construed as a statutory bond and not as a common law bond.

13. Upon request by any person or entity appearing to be a potential beneficiary of this Payment Bond, the Contractor shall promptly furnish a copy of this Payment Bond or shall permit a copy to be made.

14. DEFINITIONS

14.1 Claimant: An individual or entity identified in California Civil Code Sections 3181 or 3248.

14.2 Construction Contract: The agreement between Owner and Contractor identified above, including all Contract Documents and changes thereto.

CONTRACTOR, as Principal	SURETY
By: _____	By: _____
Its: _____	Its: _____
Address: _____	Address: _____
_____	_____

_____	_____
_____	_____
FAX: _____	FAX: _____

Note:. Signatures of those executing for Surety must be properly acknowledged. The bond must be accompanied by a power of attorney from the Surety authorizing its agent to bind it to this bond.

CONTRACT FOR CONSTRUCTION

SARATOGA VILLAGE PEDESTRIAN ENHANCEMENT STREET LIGHT WORK PROJECT

THIS CONTRACT FOR CONSTRUCTION is made and entered into this ( ) day of April 2012, by and between the City of Saratoga, a municipal corporation (herein called CITY) and ( ), herein called Contractor.

RECITALS

A. WHEREAS, the City has caused to be prepared in the manner prescribed by law, plans, specifications and other contract documents for the public work of construction [insert project name and contract number] herein described and shown and has approved and adopted the Contract Documents, including the specifications and plans, and has caused to be published in the manner and for the time required by law a Notice Inviting Bids for the work described in the Contract Documents, and

B. WHEREAS, the Contractor in response to the City's Notice has submitted to the City a sealed bid proposal accompanied by a bid guaranty in an amount not less than ten percent (10%) of the amount bid for the construction of all of the proposed work in accordance with the terms of the Contract Documents, and

C. WHEREAS, the City, in the manner prescribed by law, has publicly opened, examined and declared the bids submitted and as a result has determined and declared the Contractor to be the lowest responsible bidder and has duly awarded to the Contractor a contract for all of the work and for the sum or sums named in the bid proposal and in this Contract.

Accordingly, CITY and Contractor agree as follows:

(1) **CONTRACT SUM:** CITY agrees to pay, and the Contractor agrees to accept, in full payment for the above work, the sum of_____(( )) to be paid in accordance with the Contract Documents.

(2) **COMPLIANCE WITH LAW:** CITY is a public agency. All provisions of law applicable to public contracts are a part of this contract to the same extent as though set forth herein and will be complied with by the Contractor.

(3) **CONTRACT DOCUMENTS:** The following Contract Documents relating to this Contract for Construction are hereby made a part of and incorporated by reference into this Contract:

The Notice Inviting Bids

Information for Bidders

Statement of Experience and Qualifications Bid Form

Contract Proposal,

Faithful Performance Bond

Labor and Materials Payment Bond

Contractor's Certificate Regarding Worker's Compensation

Certificate of Insurance and Endorsements,

Affidavit Concerning Conflicts of Interest and Noncompetitive Practices

Fair Employment Practices Certificate

General Conditions, Special Conditions and Attachments thereto,

State of California Department of Transportation Standard Plans and Specifications, current year

Plans and Specifications prepared by City of Saratoga, Inc.,

and supplemental agreements, certifications, and endorsements applicable to this work, with all modifications incorporated in said documents prior to receipt of the Contract Proposals.

Any work called for in one contract document not mentioned in another is to be performed and executed the same as if mentioned in all Contract Documents.

This Agreement (including all documents referred to above and incorporated herein) represents the entire and integrated Agreement between CITY and Contractor for the Project and supersedes all prior negotiations, representations, or agreements, either written or oral. This document may be amended only by written instrument, as provided in the General Conditions.

(4) **PROHIBITED INTEREST.** Contractor represents that to the best of its knowledge no director, officer, or employee of CITY has any interest, contractual or non-contractual, financial or otherwise, in this transaction or in the business of Contractor. If any such interest comes to the knowledge of Contractor at any time, a full and complete disclosure of all such information shall be made in writing to CITY, even if such interest would not be considered a conflict of interest under Article IV Division 4 (commencing with Section 1090) or Division 4.5 (commencing with Section 3600) of the Government Code of the State of California. No member, officer, or employee of CITY or of any of its member jurisdictions

during his/her tenure of office, or for one year thereafter, shall have any interest, direct or indirect, in this Contract or the proceeds therefrom.

(5) **NOTICES.** Any notices to be given hereunder by either party to the other may be effected either by personal delivery, fax or mail. Mail shall be sent registered or certified, postage pre-paid, return receipt requested. Mailed notices shall be addressed to the parties at the addresses set forth below, but each party may change its address by written notice in accordance with this paragraph. Notices delivered personally shall be effective immediately. Notices sent by mail shall be effective one (1) day after mailing. Notices sent by facsimile shall be effective upon transmission to the number set forth below.

CITY OF SARATOGA	CONTRACTOR
Public Works Director	_____
City of Saratoga	_____
13777 Fruitvale Ave.	_____
Saratoga, CA 95070	_____
(408) 868-1239	_____

(6) **Warranties**. The Contractor hereby warrants and guarantees for one (1) year from and after the date of completion of the services provided for in this Agreement that said materials and labor necessary for the **SARATOGA VILLAGE PEDESTRIAN ENHANCEMENT STREET LIGHT WORK PROJECT**, shall operate as provided for in the Technical Specifications and Contract Documents. During the term of this warranty, Contractor shall provide all materials, parts and labor, at its own expense, which are necessary to repair and/or correct any and all defects, installation or operational failures in the equipment from any cause. Notwithstanding the foregoing, Contractor shall not be required to bear the expense of correction of any failure in the equipment that is caused solely by the negligence or willful misconduct of City. The warranties of each part or component supplied are in addition to the warranties required of Contractor in the Contract Documents.

(7) **Waiver.** No waiver of any breach of the terms, conditions or covenants of this contract shall be construed to be a waiver of any succeeding breach of the same or any other covenants, conditions or terms of this contract. The waiver by any party of a breach of this Contract shall not constitute a continuing waiver, or a waiver of any subsequent breach, either of the same of different provision of this Contract.

(8) **Time of the Essence.** Time is of the essence in this contract.

(9) **Controlling Law.** This contract and all matters relating to it shall be governed by the laws of the State of California.

(10) **Entire Agreement.** It is expressly agreed between CITY and Contractor that this contract, including the documents listed in paragraph 3 and incorporated herein, expresses the complete agreement between the parties and supersedes all prior oral or written negotiations, agreements and understandings between them regarding the subject matter hereof. This Agreement may be amended only by written agreement between the parties as provided in the Contract Documents.

CONTRACTORS ARE REQUIRED BY LAW TO BE LICENSED AND REGULATED BY THE CONTRACTORS' STATE LICENSE BOARD WHICH HAS JURISDICTION TO INVESTIGATE COMPLAINTS AGAINST CONTRACTORS IF A COMPLAINT REGARDING A PATENT ACT OR OMISSION IS FILED WITHIN FOUR (4) YEARS OF THE DATE OF THE ALLEGED VIOLATION. A COMPLAINT REGARDING A LATENT ACT OR OMISSION PERTAINING TO STRUCTURAL DEFECTS MUST BE FILED WITHIN TEN (10) YEARS OF THE DATE OF THE ALLEGED VIOLATION. ANY QUESTIONS CONCERNING A CONTRACTOR MAY BE REFERRED TO THE REGISTRAR, CONTRACTORS' STATE LICENSE BOARD, P.O. BOX 26000, SACRAMENTO, CALIFORNIA 95826.

This Agreement is executed by CITY upon approval by the Council at its regular scheduled meeting of (()), and the Contractor has caused this Agreement to be duly executed.

CITY OF SARATOGA

By: _____
Dave Anderson, City Manager

CONTRACTOR:

By: _____
(Authorized Rep. Of Contractor)

Printed Name: _____

Title: _____
(Attach Acknowledgment for Representative of Contractor)

Contractors License No.:_____

Expiration Date:_____

ATTEST: _____
Crystal Morrow, City Clerk

Dated:

APPROVED AS TO FORM:

_____
Richard Taylor
City Attorney

(Contractor Signatures must be Notarized)

REQUIRED CERTIFICATIONS

Bidders Checklist

Please read and understand all documents and forms prior to bidding. If there are any questions, please call the City of Saratoga Public Works Department at (408) 868-1218

All forms must be properly signed and returned with Bid.

Statement of Experience and Qualifications (page 61)
Bid Form (page 64)
Bid Surety (page 69)
Certificate Regarding Workers Compensation (page 87)
Non Collusion Affidavit (page 88 and page 109)
Proposed Major Material Suppliers (page 89)
Proposed Subcontractors (page 90)
Affidavit Concerning Conflicts of Interest and Noncompetitive Practices (page 91)
Fair Employment Practices Certificate (page 92)
Contractor's Response Form (page 96)
Certification Concerning Control of Employee of Contractor (page 97)
Equal Employment Opportunity Certification (page 98)
Debarment and Suspension Certification (page 110)
Nonlobbying Certification (page 111)
Disclosure of Lobbying Activities (page 112)
LOCAL AGENCY BIDDER-UDBE COMMITMENT (CONSTRUCTION CONTRACTS) – INFORMATION (LOCAL ASSISTANCE PROCEDURES MANUAL – Exhibit 15-G (1)) (page 115) **Must be submitted with your bid proposal on bid opening day.**
EXHIBIT 15-H UDBE INFORMATION-GOOD FAITH EFFORTS (LOCAL ASSISTANCE PROCEDURES MANUAL – EXHIBIT 15-H) (page 125) **Must be submitted with your bid proposal on bid opening day.**
BIDDER'S LIST (49 CFR, Part 26.11) (LOCAL ASSISTANCE PROCEDURES MANUAL – EXHIBIT 12-G) (page 132)

Successful Bidder Checklist

All forms must be properly signed and returned.

- Provide three copies of proof of insurance naming the City of Saratoga as an additional insured and evidencing the coverage's and limits specified in Section T – Insurance, Pages 36-41.
- Provide three copies of Faithful Performance Bond either directly or on forms similar to those on pages 71-74.
- Provide three copies of Labor and Material Bonds either directly or on forms similar to those on pages 75-78.
- On page 80 under **Contract Sum:**, include the contract amount (spelled out and number form)
- On Page 82, include address for notices to the contact.
- Sign the contract signature page on page 84.
- LOCAL AGENCY BIDDER-DBE INFORMATION (CONSTRUCTION CONTRACTS) INFORMATION (LOCAL ASSISTANCE PROCEDURES MANUAL – Exhibit 15-G (2)) page 119
- DISADVANTAGE BUSINESS ENTERPRISES (DBE) CERTIFICATION STATUS CHANGE (LOCAL ASSISTANCE PROCEDURES MANUAL – EXHIBIT 17-O) page 122
- FINAL REPORT UTILIZATION OF DISADVANTAGE BUSINESSES (LOCAL ASSISTANCE PROCEDURES MANUAL – EXHIBIT 17-F) page 129 **Must be submitted at the end of the project.**

CONTRACTOR'S CERTIFICATE REGARDING WORKER'S COMPENSATION

Contract with the CITY OF SARATOGA, for the construction of:

SARATOGA VILLAGE PEDESTRIAN ENHANCEMENT STREET LIGHT WORK PROJECT

Labor Code Section 3700 provides in relevant part:

"Every employer except the state shall secure the payment of compensation in one or more of the following ways:

(a) By being insured against liability to pay compensation in one or more insurers, duly authorized to write compensation insurance in this state.

(b) By securing from the Director of Industrial Relations a certificate of consent to self-insure either as an individual employer or as one employer in a group of employers, which may be given upon furnishing proof satisfactory to the Director of Industrial Relations of ability to self-insure and to pay any compensation that may become due to his or her employees. "

I am aware of the provisions of Section 3700 of the Labor Code, which require every employer to be insured against liability for worker's compensation or to undertake self-insurance in accordance with the provisions of that code, and I will comply with such provisions before commencing the performance of the work of this contract.

Dated: _____, 20__

(Contractor)

By_____

_____

(Official Title)

(SEAL)

Note: Labor Code Section 1861, provides that the above certificate must be signed and filed by the Contractor with CITY prior to performing any work under this contract.

(Contractor Signatures must be Notarized)

NONCOLLUSION AFFIDAVIT

State of California

County of _____ss.

_____, being first duly sworn, deposes and says that he or she is _____ of _____, the party making the foregoing bid, that the bid is not made in the interest of, or on behalf of, any undisclosed person, partnership, company, association, organization, or corporation; that the bid is genuine and not collusive or sham; that the bidder has not directly or indirectly induced or solicited any other bidder to put in a false or sham bid, and has not directly or indirectly colluded, conspired, connived, or agreed with any bidder or anyone else to put in a sham bid, or that anyone shall refrain from bidding; that the bidder has not in any manner, directly or indirectly, sought by agreement, communication, or conference with anyone to fix the bid price of the bidder or any other bidder, or to fix any overhead, profit, or cost element of the bid price, or of that of any other bidder, or to secure any advantage against the public body awarding the contract of anyone interested in the proposed contract; that all statements contained in the bid are true; and, further, that the bidder has not, directly or indirectly, submitted his or her bid price or any breakdown thereof, or the contents thereof, or divulged information or data relative thereto, or paid, and will not pay, any fee to any corporation, partnership, company, association, organization, bid depository, or to any member or agent thereof to effectuate a collusive or sham bid.

Signed: _____ Date: _____

Bidder's Name: _____

PROPOSED MAJOR MATERIAL SUPPLIERS

The bidder is required to furnish the following information on major materials and manufacturers. No changes will be allowed in materials or manufacturers without the prior approval of CITY.

1. _____

2. _____

3. _____

4. _____

5. _____

6. _____

7. _____

8. _____

_____
Signature of Bidder

_____
Date

PROPOSED SUBCONTRACTORS

Pursuant to the Subletting and Subcontracting Fair Practices Act (Public Contract Code Sections 4100 et seq.), the following list gives the name, business address, and portion of work (description of work to be done) for each subcontractor who will perform work or labor or render service to the prime contractor in or about the construction of the work or improvements, or a subcontractor licensed by the State of California who, under subcontract to the prime contractor, specifically fabricates and installs a portion of the work or improvement according to detailed drawings contained in the plans and specifications, in an amount in excess of one-half of one percent of the prime contractor's total bid or, in the case of bids or offers for the construction of streets or highways, including bridges, in excess of one-half of one percent of the prime contractor's total bid or ten thousand dollars ($10,000), whichever is greater. Additional supporting data may be attached to this page. Each page shall be sequentially numbered, headed "Proposed Subcontractors" and shall be signed.

NAME	BUSINESS ADDRESS	DESCRIPTION AND COST OF WORK	% OF WORK

After the award of contract, substitutions of the above-listed proposed subcontractors may only be made with the prior approval of CITY in accordance with Public Contract Code Section 4104.

Signature of Bidder _____

Date _____

AFFIDAVIT CONCERNING CONFLICTS OF INTEREST AND NONCOMPETITIVE PRACTICES

State of _____) **ss**

County of _____)

A. Conflict of Interest. That the Contractor by entering into this contract with CITY to perform or provide work, services or materials to CITY has thereby covenanted, and by this affidavit does again covenant and assure that it has no direct or indirect pecuniary or proprietary interest, and that it shall not acquire any such interest, which conflicts in any manner or degree with the services required to be performed under this contract and that it shall not employ any person or agent having any such interest. In the event that the Contractor or its agents, employees or representative hereafter acquires such a conflict of interest, it shall immediately disclose such interest to CITY and take action immediately to eliminate the conflict or to withdraw from this contract, as CITY may require.

B. Contingent Fees and Gratuities. That the Contractor, by entering into this Contract with CITY to perform or provide services or material for CITY has thereby covenanted, and by this affidavit does again covenant and assure:

1. That no person or selling agency except bona fide employees or designated agents or representative of the Contractor has been employed or retained to solicit or secure this contract with an agreement or understanding that a commission, percentage, brokerage or contingent fee would be paid; and

2. That no gratuities, in the form of entertainment, gifts or other, were offered or given by the Contractor or any of its agents, employees or representatives, to any official, member or employee of CITY or other governmental agency with a view toward securing this contract or securing favorable treatment with respect to the awarding or amending, or the making of any determination with respect to the performance of this contract.

3. That no contracts of communication or lobbying efforts were made by Contractor, its agents or officer with any member of the Council, any board or commission, or the staff of the City of Saratoga with regard to this process.

Company Name

By _____

Title _____

Subscribed and Sworn to before me

This _____ day of _____, 20___.

_____

Notary Public in and for State of _____
residing at _____

FAIR EMPLOYMENT PRACTICES CERTIFICATE

In connection with the performance of work under this contract, the Contractor agrees as follows:

1. The Contractor will not willfully discriminate against any employee or applicant for employment because of race, color, religious creed, ancestry, national origin, age, sex, sexual orientation, physical disability, mental disabilities, marital status, or medical condition as defined in Government Code Section 12926. The Contractor will take affirmative action to ensure that applicants are employed, and that employees are treated during employment, without regard to their race, color, religious creed, ancestry, national origin, age, sex, sexual orientation, physical disability, mental disability, marital status, or medical condition as defined in Government Code §12926. Such action shall include, but not be limited to, the following: employment, upgrading, demotion or transfer; recruitment or recruitment advertising; layoff or termination; rates of pay or other forms of compensation; and selection for training including apprenticeship. The Contractor agrees to post in conspicuous places, available to employees and applicants for employment, notices setting forth the provisions of this Fair Employment Practices section.

2. The Contractor will send to each labor union or representative of worker with which it has a collective bargaining agreement or other contract or understanding, a notice, advising the said labor union or worker's representative of the Contractor's commitments under this section; and the Contractor shall post copies of the notice in conspicuous places available to employees and applicants for employment.

3. The Contractor will permit access to its records of employment, employment advertisements, application forms, and other pertinent data and records by the Fair Employment Practices Commission, CITY or any other appropriate agency of the State of California designated by CITY, for the purposes of investigation to ascertain compliance with the Fair Employment Practices section of this contract.

4. A finding of willful violation of the Fair Employment Practices section of this contract or of the Fair Employment Practices Act shall be regarded by CITY as a basis for determining the Contractor to be not a "responsible Contractor" as to future contracts for which such Contractor may submit bids, for revoking the Contractor's pre-qualification rating, if any, and for refusing to establish, re-establish or renew a pre-qualification rating for the Contractor.

CITY shall deem a finding of willful violation of the Fair Employment Practices Act to have occurred upon receipt of written notice from the Fair Employment Practices Commission that it has investigated and determined that the Contractor has violated the Fair Employment Practices Act and has issued an order under Government Code §12970 or obtained a court order under Government Code §12973.

Upon receipt of such written notice from the Fair Employment Practices Commission, CITY shall notify the Contractor that unless it demonstrates to the satisfaction of CITY within a stated period that the violation has been corrected, the Contractor's pre-qualification rating will be revoked at the expiration of such period.

5. The Contractor agrees that should CITY determine that the Contractor has not complied with the Fair Employment Practices section of this contract, then pursuant to Labor Code

Sections 1735 and 1775, the Contractor shall, as a penalty to CITY, forfeit, for each calendar day, or portion thereof, for each person who was denied employment as a result of such noncompliance, the penalties provided in the labor code for violation of prevailing wage rates. Such monies may be recovered from the Contractor. CITY may deduct any such damages from any monies due the Contractor.

6. Nothing contained in this Fair Employment Practices section shall be construed in any manner of fashion so as to prevent CITY from pursuing any other remedies that may be available at law.

7. Prior to award of the contract, the Contractor shall certify to CITY that it has or will meet the following standards for affirmative compliance, which shall be evaluated in each case by CITY:

a. The Contractor shall provide evidence, as required by CITY, that it has notified all supervisors, foremen and other personnel officers, in writing, of the content of the anti-discrimination clause and their responsibilities under it.

b. The Contractor shall provide evidence, as required by CITY, that it has notified all sources of employee referral (including unions, employment agencies, advertisements, and the Department of Employment) of the content of the anti-discrimination clause.

c. The Contractor shall file a basic compliance report as required by CITY. Willfully false statements made in such reports shall be punishable as provided by law. The compliance report shall also spell out the sources of the work force and who has the responsibility for determining whom to hire, or whether or not to hire.

d. Personally, or through its representatives, the Contractor shall, through negotiations with the unions with whom it has agreements, attempt to develop an agreement which will:

(1) Spell out responsibilities for nondiscrimination in hiring, referral, upgrading and training.

(2) Otherwise implement an affirmative anti-discrimination program in terms of the unions' specific areas of skill and geography, to the end that qualified minority workers will be available and given an equal opportunity for employment.

e. The Contractor shall notify CITY of opposition to the anti-discrimination clause by individuals, firms or organizations during the period of its pre-qualification.

8. The Contractor will include the provisions of the foregoing Paragraphs 1 through 7 in every first-tier subcontract so that such provisions will be binding upon each subconsultant.

9. <u>Statements and Payrolls.</u> The Contractor shall maintain its records in conformance with the requirements in the Specifications and the following special provisions:

a. The submission by the Contractor of payrolls, or copies thereof, is not required. However, each Contractor and subconsultant shall preserve their weekly payroll records for a period of three (3) years from the date of completion of this contract.

b. The payroll records shall contain the name, address and social security number of each employee, his/her correct classification, rate of pay, daily and weekly number of hours worked, itemized deductions made, and actual wages paid.

c. The Contractor shall make its payroll records available at the project site for inspection by CITY and shall permit CITY to interview employees during working hours on the job.

The following certification is to be executed by every Contractor and enclosed and forwarded in a sealed envelope containing the bid. The person signing the certification shall state his/her address and official capacity.

FAIR EMPLOYMENT PRACTICE CERTIFICATION

The undersigned, in submitting a bid for performing the following work by contract, hereby certifies that the Contractor will meet the above standards of affirmative compliance with the Fair Employment Practices Act.

_____
(Type) PROPOSING COMPANY

_____
SIGNATURE

_____
(Type) NAME OF SIGNER

_____
(Type) TITLE

_____
(Type) NUMBER AND STREET

_____
(Type) CITY STATE ZIP CODE

_____
(Type) TELEPHONE

CONTRACTORS RESPONSE FORM

Contractors Declarations and Statement of Understanding

The undersigned (hereinafter called the "Contractor") declares that he/she has read the Notice Inviting Bids and has authority to submit the following. The Contractor understands that, in addition to this Response Form, the Information for Bidders and Contractor's supporting documents constitute parts of the contract and are incorporated herein by reference.

Contractor acknowledges that Addenda numbers _____ through _____ have been delivered and have been taken into account as part of the Agreement, and that all addenda issued are hereby made part of the Agreement.

Contractor hereby designates _____ as the person to contact for additional information. (Telephone No: _____ Fax No: _____, e-mail Address:_____)

Internal Revenue Service (IRS) Reporting Requirements

Check one: ☐ Corporation; ☐ Partnership; ☐ Sole Proprietor; ☐ Other _____

Identify: State of Incorporation: _____

Provide one: Federal Tax Number _____ Social Security Number _____

What is the official name registered with the IRS for this number _____

Firm Name: _____

Address: _____

City, State, Zip _____

Phone Number _____

Authorized Signature _____

CITY OF SARATOGA

A CERTIFICATION CONCERNING CONTROL OF EMPLOYEES

OF CONTRACTOR

The Contractor, by entering into this Agreement with CITY to perform or provide work, services or materials to CITY, does hereby certify and assure that in performing the services under this Agreement, the Contractor shall act as an independent Contractor and shall have full control of the work and Contractor's employees. Contractor and its employees in no circumstances whatsoever shall imply or be deemed an agent(s) or employee(s) of CITY. Contractor's employees in no circumstances shall be entitled to part of any pension plan, insurance, bonus or any similar benefits which CITY provides its own employees.

Any infraction of this Certification shall be cause for termination of this Agreement.

Signed

_____

Authorized Representative of Bidder

Title

_____

Date _____

(THE BIDDER'S EXECUTION ON THE SIGNATURE PORTION OF THIS PROPOSAL SHALL ALSO CONSTITUTE AN ENDORSEMENT AND EXECUTION OF THOSE CERTIFICATIONS WHICH ARE A PART OF THIS PROPOSAL)

EQUAL EMPLOYMENT OPPORTUNITY CERTIFICATION

The bidder_____, proposed subcontractor _____, hereby certifies that he has_____,
has not___, participated in a previous contract or subcontract subject to the equal opportunity clauses, as required by Executive Orders 10925, 11114, or 11246, and that, where required, he has filed with the Joint Reporting Committee, the Director of the Office of Federal Contract Compliance, a Federal Government contracting or administering agency, or the former President's Committee on Equal Employment Opportunity, all reports due under the applicable filling requirements.

Note: The above certification is required by the Equal Employment Opportunity Regulations of the Secretary of Labor (41 CFR 60-1.7(b) (1)), and must be submitted by bidders and proposed subcontractors only in connection with contracts and subcontracts, which are subject to the equal opportunity clause. Contracts and subcontracts which are exempt from the equal opportunity clause are set forth in 41 CFR 60-1.5. (Generally only contracts or subcontracts of $10,000 or under are exempt.)

Currently, Standard Form 100 (EEO-1) is the only report required by the Executive Orders or their implementing regulations.

Proposed prime contractors and subcontractors who have participated in a previous contract or subcontract subject to the Executive Orders and have not filed the required reports should note that 41 CFR 60-1.7(b) (1) prevents the award of contracts and subcontracts unless such contractor submits a report covering the delinquent period or such other period specified by the Federal Highway Administration or by the Director, Office of Federal Contract Compliance, U.S. Department of Labor.

STATE AND FEDERAL CONTRACT REQUIREMENTS & CONDITIONS

SECTION 1. SPECIFICATIONS AND PLANS

The work embraced herein shall be done in accordance with the Standard Specifications dated May 2006, and the Standard Plans dated May 2006, of the Department of Transportation insofar as the same may apply and these special provisions.
In case of conflict between the Standard Specifications and these special provisions, the special provisions shall take precedence over and be used in lieu of the conflicting portions.

Amendments to the Standard Specifications set forth in these special provisions shall be considered as part of the Standard Specifications for the purposes set forth in Section 5-1.04, "Coordination and Interpretation of Plans, Standard Specifications and Special Provisions," of the Standard Specifications. Whenever either the term "Standard Specifications is amended" or the term "Standard Specifications are amended" is used in the special provisions, the indented text or table following the term shall be considered an amendment to the Standard Specifications. In case of conflict between such amendments and the Standard Specifications, the amendments shall take precedence over and be used in lieu of the conflicting portions.

SECTION 2. PROPOSAL REQUIREMENTS AND CONDITIONS

2-1.01 GENERAL
The bidder's attention is directed to the provisions in Section 2, "Proposal Requirements and Conditions," of the Standard Specifications and these special provisions for the requirements and conditions which the bidder must observe in the preparation of and the submission of the bid.

The bidder's bond shall conform to the bond form in the Bid book for the project and shall be properly filled out and executed. The bidder’s bond form included in that book may be used.
In conformance with Public Contract Code Section 7106, a Noncollusion Affidavit is included in the Bid book. Signing the Bid book shall also constitute signature of the Noncollusion Affidavit.
The contractor, sub recipient or subcontractor shall not discriminate on the basis of race, color, national origin, or sex in the performance of this contract. The contractor shall carry out applicable requirements of Title 49 CFR (Code of Federal Regulations) part 26 in the award and administration of US DOT assisted contracts. Failure by the contractor to carry out these requirements is a material breach of this contract, which may result in the termination of this contract or such other remedy, as the recipient deems appropriate. Each subcontract signed by the bidder must include this assurance.
Failure of the bidder to fulfill the requirements of the Special Provisions for submittals required to be furnished after bid opening, including but not limited to escrowed bid documents, where applicable, may subject the bidder to a determination of the bidder's responsibility in the event it is the apparent low bidder on a future public works contracts.

(Use this Section for projects with Federal funds over $100,000)

2-1.015--FEDERAL LOBBYING RESTRICTIONS.--Section 1352, Title 31, United States Code prohibits Federal funds from being expended by the recipient or any lower tier sub recipient of a Federal-aid contract to pay for any person for influencing or attempting to influence a Federal agency or Congress in connection with the awarding of any Federal-aid contract, the making of any Federal grant or loan, or the entering into of any cooperative agreement.

If any funds other than Federal funds have been paid for the same purposes in connection with this Federal-aid contract, the recipient shall submit an executed certification and, if required, submit a completed disclosure form as part of the bid documents.

A certification for Federal-aid contracts regarding payment of funds to lobby Congress or a Federal agency is included in the Bid book. Standard Form - LLL, "Disclosure of Lobbying Activities," with instructions for completion of the Standard Form is also included in the Bid book. Signing the Bid book shall constitute signature of the Certification.

The above referenced certification and disclosure of lobbying activities shall be included in each subcontract and any lower-tier contracts exceeding $100,000. All disclosure forms, but not certifications, shall be forwarded from tier to tier until received by the Engineer.

The Contractor, subcontractors and any lower-tier contractors shall file a disclosure form at the end of each calendar quarter in which there occurs any event that requires disclosure or that materially affects the accuracy of the information contained in any disclosure form previously filed by the Contractor, subcontractors and any lower-tier contractors. An event that materially affects the accuracy of the information reported includes:

(1) A cumulative increase if $25,000 or more in the amount paid or expected to be paid for influencing or attempting to influence a covered Federal action; or

(2) A change in the person(s) or individual(s) influencing or attempting to influence a covered Federal action; or

(3) A change in the officer(s), employees(s), or Member(s) contacted to influence or attempt to influence a covered Federal Action.

2-1.02 DISADVANTAGED BUSINESS ENTERPRISE (DBE).—This project is subject to Title 49 CFR 26.13(b):

> The contractor, sub recipient or subcontractor shall not discriminate on the basis of race, color, national origin, or sex in the performance of this contract. The contractor shall carry out applicable requirements of 49 CFR part 26 in the award and administration of DOT-assisted contracts. Failure by the contractor to carry out these requirements is a material breach of this contract, which may result in the termination of this contract or such other remedy as the recipient deems appropriate.

Take necessary and reasonable steps to ensure that DBEs have opportunity to participate in the contract (49 CFR 26).

To ensure there is equal participation of the DBE groups specified in 49 CFR 26.5, the Agency specifies a goal for Underutilized Disadvantaged Business Enterprises (UDBEs). UDBE is a firm that meets the definition of DBE and is a member of one of the following groups:

1. Black Americans
2. Native Americans
3. Asian-Pacific Americans
4. Women

References to DBEs include UDBEs, but references to UDBEs do not include all DBEs.

Make work available to UDBEs and select work parts consistent with available UDBE subcontractors and suppliers.

Meet the UDBE goal shown in the Notice to Bidders or demonstrate that you made adequate good faith efforts to meet this goal.

It is your responsibility to verify that the UDBE firm is certified as DBE at date of bid opening. For a list of DBEs certified by the California Unified Certification Program, go to:

http://www.dot.ca.gov/hq/bep/find_certified.htm

Only UDBE participation will count towards the UDBE goal. DBE participation will count towards the Agency's Annual Anticipated DBE Participation Level and the California statewide goal.

Credit for materials or supplies you purchase from UDBEs counts towards the goal in the following manner:

1. 100 percent counts if the materials or supplies are obtained from a UDBE manufacturer.
2. 60 percent counts if the materials or supplies are obtained from a UDBE regular dealer.
3. Only fees, commissions, and charges for assistance in the procurement and delivery of materials or supplies count if obtained from a UDBE that is neither a manufacturer or regular dealer. 49 CFR 26.55 defines "manufacturer" and "regular dealer."

You receive credit towards the goal if you employ a UDBE trucking company that performs a commercially useful function as defined in 49 CFR 26.55.

UDBE Commitment Submittal

Submit UDBE information on the “Local Agency Bidder-UDBE Commitment (Construction Contracts),” Exhibit 15-G(1), form included in the Bid book. If the local agency does not require the form to be submitted with the bid, remove the form from the Bid book before submitting your bid. See Information for Bidders and Bidders’ Checklist for documents contractors are to submit with their bids.

If the UDBE Commitment form is not submitted with the bid, the apparent low bidder, the 2nd low bidder, and the 3rd low bidder must complete and submit the UDBE Commitment form to the Agency. UDBE Commitment form must be received by the Agency no later than 4:00 p.m. on the 4th business day after bid opening.

Other bidders do not need to submit the UDBE Commitment form unless the Agency requests it. If the Agency requests you to submit a UDBE Commitment form, submit the completed form within 4 business days of the request.

Submit written confirmation from each UDBE stating that it is participating in the contract. Include confirmation with the UDBE Commitment form. A copy of a UDBE's quote will serve as written confirmation that the UDBE is participating in the contract.

If you do not submit the UDBE Commitment form within the specified time, the Agency finds your bid nonresponsive.

Good Faith Efforts Submittal

If you have not met the UDBE goal, complete and submit the "UDBE Information - Good Faith Efforts," Exhibit 15-H, form with the bid showing that you made adequate good faith efforts to meet the goal. Only good faith efforts directed towards obtaining participation by UDBEs will be considered.

If your UDBE Commitment form shows that you have met the UDBE goal or if you are required to submit the UDBE Commitment form, you must also submit good faith efforts documentation within the specified time to protect your eligibility for award of the contract in the event the Agency finds that the UDBE goal has not been met.

Good faith efforts documentation must include the following information and supporting documents, as necessary:

1. Items of work you have made available to UDBE firms. Identify those items of work you might otherwise perform with its own forces and those items that have been broken down into economically feasible units to facilitate UDBE participation. For each item listed, show the dollar value and percentage of the total contract. It is your responsibility to demonstrate that sufficient work to meet the goal was made available to UDBE firms.
2. Names of certified UDBEs and dates on which they were solicited to bid on the project. Include the items of work offered. Describe the methods used for following up initial solicitations to determine with certainty if the UDBEs were interested, and the dates of the follow-up. Attach supporting documents such as copies of letters, memos, facsimiles sent, telephone logs, telephone billing statements, and other evidence of solicitation. You are reminded to solicit certified UDBEs through all reasonable and available means and provide sufficient time to allow UDBEs to respond.
3. Name of selected firm and its status as a UDBE for each item of work made available. Include name, address, and telephone number of each UDBE that provided a quote and their price quote. If the firm selected for the item is not a UDBE, provide the reasons for the selection.
4. Name and date of each publication in which you requested UDBE participation for the project. Attach copies of the published advertisements.
5. Names of agencies and dates on which they were contacted to provide assistance in contacting, recruiting, and using UDBE firms. If the agencies were contacted in writing, provide copies of supporting documents.
6. List of efforts made to provide interested UDBEs with adequate information about the plans, specifications, and requirements of the contract to assist them in responding to a solicitation. If you have provided information, identify the name of the UDBE assisted, the nature of the information provided, and date of contact. Provide copies of supporting documents, as appropriate.
7. List of efforts made to assist interested UDBEs in obtaining bonding, lines of credit, insurance, necessary equipment, supplies, and materials, excluding supplies and equipment that the UDBE subcontractor purchases or leases from the prime contractor or its affiliate. If such assistance is provided by you, identify the name of the UDBE assisted, nature of the assistance offered, and date. Provide copies of supporting documents, as appropriate.
8. Any additional data to support demonstration of good faith efforts.

SECTION 3. AWARD AND EXECUTION OF CONTRACT

The bidder's attention is directed to the provisions in Section 3, "Award and Execution of Contract," of the Standard Specifications and these special provisions for the requirements and conditions concerning award and execution of contract.

Bid protests are to be delivered to the following address: (13777 Fruitvale Ave, Saratoga,CA)

2

The award of the contract, if it be awarded, will be to the lowest responsible bidder whose bid complies with all the requirements prescribed.

The contract shall be executed by the successful bidder and shall be returned, together with the contract bonds, to the Agency so that it is received within 10 days, not including Saturdays, Sundays and legal holidays, after the bidder has received the contract for execution. Failure to do so shall be just cause for forfeiture of the proposal guaranty. The executed contract documents shall be delivered to the following address: (Agency to provide detailed information if this paragraph is used)

A "Local Agency Bidder-DBE Information (Construction Contracts), Exhibit 15-G(2)" form is included in the Bid book to be executed by the successful bidder. The purpose of the form is to collect data required under 49 CFR 26. Even if no DBE participation will be reported, the successful bidder must execute and return the form.

The successful bidder's "Local Agency Bidder- Information (Construction Contracts), Exhibit 15-G(2)" form should include the names, addresses and phone numbers of DBE firms that will participate, with a complete description of work or supplies to be provided by each, and the dollar value of each DBE transaction. When 100 percent of a contract item of work is not to be performed or furnished by a DBE, a description of the exact portion of that work to be performed or furnished by that DBE should be included in the DBE information, including the planned location of that work. A successful bidder certified as a DBE should describe the work it has committed to performing with its own forces as well as any other work that it has committed to be performed by DBE subcontractors, suppliers and trucking companies.

The successful bidder is encouraged to provide written confirmation from each DBE that the DBE is participating in the contract. A copy of a DBE's quote will serve as written confirmation that the DBE is participating in the contract. If a DBE is participating as a joint venture partner, the successful bidder is encouraged to submit a copy of the joint venture agreement.

The "Local Agency Bidder-DBE Information (Construction Contracts), Exhibit 15-G(2)" form shall be completed and returned to the Agency by the successful bidder with the executed contract and contract bonds.

SECTION 4. BEGINNING OF WORK, TIME OF COMPLETION AND LIQUIDATED DAMAGES

Attention is directed to the provisions in Section 8-1.03, "Beginning of Work," in Section 8-1.06, "Time of Completion," and in Section 8-1.07, "Liquidated Damages," of the Standard Specifications and these special provisions.

The Contractor shall begin work within 10 calendar days after the contract has been approved by the City of Saratoga.

This work shall be diligently prosecuted to completion before the expiration of 40 WORKING DAYS beginning on the __ calendar day after approval of the contract.

(Insert amount of Liquidated Damages)

The Contractor shall pay to the City of Saratoga the sum of $ 300 per day, for each and every calendar day's delay in finishing the work in excess of the number of working days prescribed above.

LIQUIDATED DAMAGES TABLE (L%)
(OPTIONAL FOR NON-NHS PROJECTS)

Project Estimate	**Project Type**					
	Resurfacing*/Rehab	New Highway	Realignment/ Widening	Landscaping	Soundwall	Others
Over $30 million	10 %	10 %	13%	15 %	15 %	15 %
$10 million to $30 million	10 %	12 %	15 %	15 %	15 %	15 %
$5 million to $10 million	10 %	15 %	15 %	15 %	15 %	15 %
$750k to $5 million	15 %	15%	15 %	18 %	18 %	15 %
Less Than $750k	15 %	20 %	20 %	18 %	20 %	15 %

* Resurfacing projects include AC Surfacing, seal coats, slurry seals, and so on.

The calculated liquidated damages should be rounded up in $100 increments to determine the amount to be specified.

SECTION 5. GENERAL

SECTION 5-1. MISCELLANEOUS

Required for ALL construction contracts and subcontracts of $5,000 or more.

5-1.1 LABOR NONDISCRIMINATION. -- Attention is directed to the following Notice that is required by Chapter 5 of Division 4 of Title 2, California Code of Regulations.

NOTICE OF REQUIREMENT FOR NONDISCRIMINATION PROGRAM
(GOV. CODE, SECTION 12990)

Your attention is called to the "Nondiscrimination Clause", set forth in Section 7-1.01A(4), "Labor Nondiscrimination," of the Standard Specifications, which is applicable to all nonexempt state contracts and subcontracts, and to the "Standard California Nondiscrimination Construction Contract Specifications" set forth therein. The Specifications are applicable to all nonexempt state construction contracts and subcontracts of $5,000 or more.

5-1.2 PREVAILING WAGE. -- Attention is directed to Section 7-1.01A(2), "Prevailing Wage," of the Standard Specifications.

The general prevailing wage rates determined by the Director of Industrial Relations, for the county or counties in which the work is to be done, are available at the City of Saratoga address. These wage rates are not included in the Proposal and Contract for the project. Changes, if any, to the general prevailing wage rates will be available at the same location.

5-1.3 BUY AMERICA REQUIREMENTS. -- Attention is directed to the "Buy America" requirements of the Surface Transportation Assistance Act of 1982 (Section 165) and the Intermodal Surface Transportation Efficiency Act of 1991 (ISTEA) Sections 1041(a) and 1048(a), and the regulations adopted pursuant thereto. In conformance with the law and regulations, all manufacturing processes for steel and iron materials furnished for incorporation into the work on this project shall occur in the United States; with the exception that pig iron and processed, pelletized and reduced iron ore manufactured outside of the United States may be used in the domestic manufacturing process for such steel and iron materials. The application of coatings, such as epoxy coating, galvanizing, painting, and other coating that protects or enhances the value of steel or iron materials shall be considered a manufacturing process subject to the "Buy America" requirements.

A Certificate of Compliance, conforming to the provisions in Section 6-1.07, "Certificates of Compliance," of the Standard Specifications, shall be furnished for steel and iron materials. The certificates, in addition to certifying that the materials comply with the specifications, shall specifically certify that all manufacturing processes for the materials occurred in the United States, except for the above exceptions.

The requirements imposed by the law and regulations do not prevent a minimal use of foreign steel and iron materials if the total combined cost of the materials used does not exceed one-tenth of one percent (0.1 percent) of the total contract cost or $2,500, whichever is greater. The Contractor shall furnish the Engineer acceptable documentation of the quantity and value of the foreign steel and iron prior to incorporating the materials into the work.

5-1.4 REMOVAL OF ASBESTOS AND HAZARDOUS SUBSTANCES. -- When the presence of asbestos or hazardous substances are not shown on the plans or indicated in the specifications and the Contractor encounters materials which the Contractor reasonably believes to be asbestos or a hazardous

substance as defined in Section 25914.1 of the Health and Safety Code, and the asbestos or hazardous substance has not been rendered harmless, the Contractor may continue work in unaffected areas reasonably believed to be safe. The Contractor shall immediately cease work in the affected area and report the condition to the Engineer in writing.
In conformance with Section 25914.1 of the Health and Safety Code, removal of asbestos or hazardous substances including exploratory work to identify and determine the extent of the asbestos or hazardous substance will be performed by separate contract.
If delay of work in the area delays the current controlling operation, the delay will be considered a right of way delay and the Contractor will be compensated for the delay in conformance with the provisions in Section 8-1.09, "Right of Way Delays," of the Standard Specifications.

5-1.5 SUBCONTRACTOR AND DBE RECORDS

The Contractor shall maintain records showing the name and business address of each first-tier subcontractor. The records shall also show the name and business address of every DBE subcontractor, DBE vendor of materials and DBE trucking company, regardless of tier. The records shall show the date of payment and the total dollar figure paid to all of these firms. DBE prime contractors shall also show the date of work performed by their own forces along with the corresponding dollar value of the work.

Upon completion of the contract, a summary of these records shall be prepared on "Final Report-Utilization of Disadvantaged Business Enterprises (DBE), First Tier Subcontractors" (Exhibit 17-F/Form CEM-2402) and certified correct by the Contractor or the Contractor's authorized representative, and shall be furnished to the Engineer. The form shall be furnished to the Engineer within 90 days from the date of contract acceptance. The amount of $10,000 will be withheld from payment until a satisfactory form is submitted.

Prior to the fifteenth of each month, the Contractor shall submit documentation to the Engineer showing the amount paid to DBE trucking companies. The Contractor shall also obtain and submit documentation to the Engineer showing the amount paid by DBE trucking companies to all firms, including owner-operators, for the leasing of trucks. If the DBE leases trucks from a non-DBE, the Contactor may count only the fee or commission the DBE receives as a result of the lease arrangement.

The Contractor shall also obtain and submit documentation to the Engineer showing the truck number, owner's name, California Highway Patrol CA number, and if applicable, the DBE certification number of the owner of the truck for all trucks used during that month. This documentation shall be submitted on "Monthly DBE Trucking Verification" Form CEM-2404(F).

5-1.6 DBE CERTIFICATION STATUS

If a DBE subcontractor is decertified during the life of the project, the decertified subcontractor shall notify the Contractor in writing with the date of decertification. If a subcontractor becomes a certified DBE during the life of the project, the subcontractor shall notify the Contractor in writing with the date of certification. The Contractor shall furnish the written documentation to the Engineer.

Upon completion of the contract, "Disadvantaged Business Enterprises (DBE) Certification Status Change" Form CEM-2403(F) indicating the DBEs' existing certification status shall be signed and certified correct by the Contractor. The certified form shall be furnished to the Engineer within 90 days from the date of contract acceptance.

5-1.7 PERFORMANCE OF SUBCONTRACTORS

The subcontractors listed by you in Bid book shall list therein the name and address of each subcontractor to whom the bidder proposes to subcontract portions of the work in an amount in excess of one-half of one percent of the total bid or $10,000, whichever is greater, in accordance with the Subletting and Subcontracting Fair Practices Act, commencing with Section 4100 of the Public Contract Code. The bidder's attention is invited to other provisions of the Act related to the imposition of penalties for a failure to observe its provisions by using unauthorized subcontractors or by making unauthorized substitutions.

UDBEs must perform work or supply materials as listed in the "Local Agency Bidder - UDBE Commitment" form specified under Section 2, "Bidding," of these special provisions. Do not terminate a UDBE listed subcontractor for convenience and perform the work with your own forces or obtain materials from other sources without prior written authorization from the Agency.

The Agency grants authorization to use other forces or sources of materials for requests that show any of the following justifications:

1. Listed UDBE fails or refuses to execute a written contract based on plans and specifications for the project.
2. You stipulate a bond is a condition of executing the subcontract and the listed UDBE fails to meet your bond requirements.
3. Work requires a contractors license and listed UDBE does not have a valid license under Contractors License Law.
4. Listed UDBE fails or refuses to perform the work or furnish the listed materials.
5. Listed UDBE's work is unsatisfactory and not in compliance with the contract.
6. Listed UDBE delays or disrupts the progress of the work.
7. Listed UDBE becomes bankrupt or insolvent.

If a listed UDBE subcontractor is terminated, you must make good faith efforts to find another UDBE subcontractor to substitute for the original UDBE. The substitute UDBE must perform at least the same amount of work as the original UDBE under the contract to the extent needed to meet the UDBE goal.

The substitute UDBE must be certified as a DBE at the time of request for substitution.

The Agency does not pay for work or material unless it is performed or supplied by the listed UDBE, unless the UDBE is terminated in accordance with this section.

5-1.8 SUBCONTRACTING

No subcontract releases the Contractor from the contract or relieves the Contractor of their responsibility for a subcontractor's work.
If the Contractor violates Pub Cont Code § 4100 et seq., the City/County of _____ may exercise the remedies provided under Pub Cont Code § 4110. The City/County of _____ may refer the violation to the Contractors State License Board as provided under Pub Cont Code § 4111.
The Contractor shall perform work equaling at least 30 percent of the value of the original total bid with the Contractor's own employees and equipment, owned or rented, with or without operators.
Each subcontract must comply with the contract.
Each subcontractor must have an active and valid State contractor's license with a classification appropriate for the work to be performed (Bus & Prof Code, § 7000 et seq.).
Submit copies of subcontracts upon request by the Engineer.
Before subcontracted work starts, submit a Subcontracting Request form.

Do not use a debarred contractor; a current list of debarred contractors is available at the Department of Industrial Relations' Web site.
Upon request by the Engineer, immediately remove and not again use a subcontractor who fails to prosecute the work satisfactorily.

Each subcontract and any lower tier subcontract that may in turn be made shall include the "Required Contract Provisions Federal-Aid Construction Contracts" in Section 14 of these special provisions. Noncompliance shall be corrected. Payment for subcontracted work involved will be withheld from progress payments due, or to become due, until correction is made. Failure to comply may result in termination of the contract.

5-1.9 PROMPT PROGRESS PAYMENT TO SUBCONTRACTORS

A prime contractor or subcontractor shall pay any subcontractor not later than 10 days of receipt of each progress payment in accordance with the provision in Section 7108.5 of the California Business and Professions Code concerning prompt payment to subcontractors. The 10 days is applicable unless a longer period is agreed to in writing. Any delay or postponement of payment over 30 days may take place only for good cause and with the agency's prior written approval. Any violation of Section 7108.5 shall subject the violating contractor or subcontractor to the penalties, sanction and other remedies of that section. This requirement shall not be construed to limit or impair any contractual, administrative, or judicial remedies otherwise available to the contractor or subcontractor in the event of a dispute involving late payment or nonpayment by the prime contractor, deficient subcontract performance, or noncompliance by a subcontractor.

5-2.0 PROMPT PAYMENT OF FUNDS WITHHELD TO SUBCONTRACTORS

The agency shall hold retainage from the prime contractor and shall make prompt and regular incremental acceptances of portions, as determined by the agency, of the contract work, and pay retainage to the prime contractor based on these acceptances. The prime contractor, or subcontractor, shall return all monies withheld in retention from a subcontractor within 30 days after receiving payment for work satisfactorily completed and accepted including incremental acceptances of portions of the contract work by the agency. Federal law (49CFR26.29) requires that any delay or postponement of payment over 30 days may take place only for good cause and with the agency's prior written approval. Any violation of this provision shall subject the violating prime contractor or subcontractor to the penalties, sanctions and other remedies specified in Section 7108.5 of the Business and Professions Code. These requirements shall not be construed to limit or impair any contractual, administrative, or judicial remedies otherwise available to the prime contractor or subcontractor in the event of a dispute involving late payment or nonpayment by the prime contractor, deficient subcontract performance, or noncompliance by a subcontractor. This provision applies to both DBE and non-DBE prime contractors and subcontractors.

Noncollusion Affidavit

(Title 23 United States Code Section 112 and
Public Contract Code Section 7106)

To the CITY of Saratoga *DEPARTMENT OF PUBLIC WORKS*.

In accordance with Title 23 United States Code Section 112 and Public Contract Code 7106 the bidder declares that the bid is not made in the interest of, or on behalf of, any undisclosed person, partnership, company, association, organization, or corporation; that the bid is genuine and not collusive or sham; that the bidder has not directly or indirectly induced or solicited any other bidder to put in a false or sham bid, and has not directly or indirectly colluded, conspired, connived, or agreed with any bidder or anyone else to put in a sham bid, or that anyone shall refrain from bidding; that the bidder has not in any manner, directly or indirectly, sought by agreement, communication, or conference with anyone to fix the bid price of the bidder or any other bidder, or to fix any overhead, profit, or cost element of the bid price, or of that of any other bidder, or to secure any advantage against the public body awarding the contract of anyone interested in the proposed contract; that all statements contained in the bid are true; and, further, that the bidder has not, directly or indirectly, submitted his or her bid price or any breakdown thereof, or the contents thereof, or divulged information or data relative thereto, or paid, and will not pay, any fee to any corporation, partnership, company association, organization, bid depository, or to any member or agent thereof to effectuate a collusive or sham bid.

Note: The above Noncollusion Affidavit is part of the Proposal. Signing this Proposal on the signature portion thereof shall also constitute signature of this Noncollusion Affidavit. Bidders are cautioned that making a false certification may subject the certifier to criminal prosecution.

Project Title: **SARATOGA VILLAGE PEDESTRIAN ENHANCEMENT STREET LIGHT WORK PROJECT**

Federal Project No: **CML-5332(018)**

DEBARMENT AND SUSPENSION CERTIFICATION

TITLE 49, CODE OF FEDERAL REGULATIONS, PART 29

The bidder, under penalty of perjury, certifies that, except as noted below, he/she or any other person associated therewith in the capacity of owner, partner, director, officer, and manager:

- Is not currently under suspension, debarment, voluntary exclusion, or determination of ineligibility by any federal agency;
- Has not been suspended, debarred, voluntarily excluded or determined ineligible by any federal agency within the past 3 years;
- Does not have a proposed debarment pending; and
- Has not been indicted, convicted, or had a civil judgment rendered against it by a court of competent jurisdiction in any matter involving fraud or official misconduct within the past 3 years.

If there are any exceptions to this certification, insert the exceptions in the following space.

Exceptions will not necessarily result in denial of award, but will be considered in determining bidder responsibility. For any exception noted above, indicate below to whom it applies, initiating agency, and dates of action.

_____
Signature

_____
Title:

_____
Legal Company Name:

Notes: Providing false information may result in criminal prosecution or administrative sanctions. The above certification is part of the Proposal. Signing this Proposal on the signature portion thereof shall also constitute signature of this Certification.

Project Title: **SARATOGA VILLAGE PEDESTRIAN ENHANCEMENT STREET LIGHT WORK PROJECT**

Federal Project No: **CML-5332(018)**

NONLOBBYING CERTIFICATION FOR FEDERAL-AID CONTRACTS

The prospective participant certifies, by signing and submitting this bid or proposal, to the best of his or her knowledge and belief, that:

(l) No federal appropriated funds have been paid or will be paid, by or on behalf of the undersigned, to any person for influencing or attempting to influence an officer or employee of any federal agency, a Member of Congress, an officer or employee of Congress, or an employee of a Member of Congress in connection with the awarding of any federal contract, the making of any federal grant, the making of any federal loan, the entering into of any cooperative agreement, and the extension, continuation, renewal, amendment, or modification of any federal contract, grant, loan, or cooperative agreement.

(2) If any funds other than federal appropriated funds have been paid or will be paid to any person for influencing or attempting to influence an officer or employee of any federal agency, a Member of Congress, an officer or employee of Congress, or an employee of a Member of Congress in connection with this federal contract, grant, loan, or cooperative agreement, the undersigned shall complete and submit Standard Form-LLL, "Disclosure of Lobbying Activities," in accordance with its instructions.

This certification is a material representation of fact upon which reliance was placed when this transaction was made or entered into. Submission of this certification is a prerequisite for making or entering into this transaction imposed by Section 1352, Title 31, U.S. Code. Any person who fails to file the required certification shall be subject to a civil penalty of not less than $10,000 and not more than $100,000 for each such failure.

The prospective participant also agrees by submitting his or her bid or proposal that he or she shall require that the language of this certification be included in all lower tier subcontracts, which exceed $100,000 and that all such subrecipients shall certify and disclose accordingly.

_____
Signature

_____
Title:

_____
Legal Company Name:

Project Title: **SARATOGA VILLAGE PEDESTRIAN ENHANCEMENT STREET LIGHT WORK PROJECT**
Federal Project No: **CML-5332(018)**

DISCLOSURE OF LOBBYING ACTIVITIES

COMPLETE THIS FORM TO DISCLOSE LOBBYING ACTIVITIES PURSUANT TO 31 U.S.C. 1352

1. Type of Federal Action:

☐ a. contract
b. grant
c. cooperative agreement
d. loan
e. loan guarantee
f. loan insurance

2. Status of Federal Action:

☐ a. bid/offer/application
b. initial award
c. post-award

3. Report Type:

☐ a. initial
b. material change

For Material Change Only:
year ____ quarter _____
date of last report_____

4. Name and Address of Reporting Entity

☐ Prime ☐ Subawardee
Tier_____ , if known

Congressional District, if known

5. If Reporting Entity in No. 4 is Subawardee, Enter Name and Address of Prime:

Congressional District, if known

6. Federal Department/Agency:

7. Federal Program Name/Description:

CFDA Number, if applicable _____

8. Federal Action Number, if known:

9. Award Amount, if known:

10. a. Name and Address of Lobby Entity
(If individual, last name, first name, MI)

b. Individuals Performing Services (including address if different from No. 10a)
(last name, first name, MI)

(attach Continuation Sheet(s) if necessary)

11. Amount of Payment (check all that apply)

$ _____ ☐ actual planned

12. Form of Payment (check all that apply):

☐ a. cash
☐ b. in-kind; specify: nature _____
value_____

13. Type of Payment (check all that apply)

☐ a. retainer
☐ b. one-time fee
☐ c. commission
☐ d. contingent fee
☐ e deferred
☐ f. other, specify_____

14. Brief Description of Services Performed or to be performed and Date(s) of Service, including officer(s), employee(s), or member(s) contacted, for Payment Indicated in Item 11:

(attach Continuation Sheet(s) if necessary)

15. Continuation Sheet(s) attached: Yes ☐ **No** ☐

16. Information requested through this form is authorized by Title 31 U.S.C. Section 1352. This disclosure of lobbying reliance was placed by the tier above when his transaction was made or entered into. This disclosure is required pursuant to 31 U.S.C. 1352. This information will be reported to Congress semiannually and will be available for public inspection. Any person who fails to file the required disclosure shall be subject to a civil penalty of not less than $10,000 and not more than $100,000 for each such failure.

Signature: _____

Print Name: _____

Title: _____

Telephone No.:_____ Date:_____

Authorized for Local Reproduction
Standard Form - LLL

Federal Use Only:

Standard Form LLL Rev. 09-12-97

INSTRUCTIONS FOR COMPLETION OF SF-LLL, DISCLOSURE OF LOBBYING ACTIVITIES

This disclosure form shall be completed by the reporting entity, whether subawardee or prime federal recipient, at the initiation or receipt of covered federal action or a material change to previous filing pursuant to title 31 U.S.C. Section 1352. The filing of a form is required for such payment or agreement to make payment to lobbying entity for influencing or attempting to influence an officer or employee of any agency, a Member of Congress an officer or employee of Congress or an employee of a Member of Congress in connection with a covered federal action. Attach a continuation sheet for additional information if the space on the form is inadequate. Complete all items that apply for both the initial filing and material change report. Refer to the implementing guidance published by the Office of Management and Budget for additional information.

1. Identify the type of covered federal action for which lobbying activity is and/or has been secured to influence, the outcome of a covered federal action.
2. Identify the status of the covered federal action.
3. Identify the appropriate classification of this report. If this is a follow-up report caused by a material change to the information previously reported, enter the year and quarter in which the change occurred. Enter the date of the last, previously submitted report by this reporting entity for this covered federal action.
4. Enter the full name, address, city, State and zip code of the reporting entity. Include Congressional District if known. Check the appropriate classification of the reporting entity that designates if it is or expects to be a prime or subaward recipient. Identify the tier of the subawardee, e.g., the first subawardee of the prime is the first tier. Subawards include but are not limited to subcontracts, subgrants and contract awards under grants.
5. If the organization filing the report in Item 4 checks "Subawardee" then enter the full name, address, city, State and zip code of the prime federal recipient. Include Congressional District, if known.
6. Enter the name of the federal agency making the award or loan commitment. Include at least one organization level below agency name, if known. For example, Department of Transportation, United States Coast Guard.
7. Enter the federal program name or description for the covered federal action (item 1). If known, enter the full Catalog of Federal Domestic Assistance (CFDA) number for grants, cooperative agreements, loans and loan commitments.
8. Enter the most appropriate federal identifying number available for the federal action identification in item 1 (e.g., Request for Proposal (RFP) number, Invitation for Bid (IFB) number, grant announcement number, the contract grant. or loan award number, the application/proposal control number assigned by the federal agency). Include prefixes, e.g., "RFP-DE-90-001."
9. For a covered federal action where there has been an award or loan commitment by the Federal agency, enter the federal amount of the award/loan commitments for the prime entity identified in item 4 or 5.
10. (a) Enter the full name, address, city, State and zip code of the lobbying entity engaged by the reporting entity identified in item 4 to influenced the covered federal action.
    (b) Enter the full names of the individual(s) performing services and include full address if different from 10 (a). Enter Last Name, First Name and Middle Initial (Ml).
11. Enter the amount of compensation paid or reasonably expected to be paid by the reporting entity (item 4) to the lobbying entity (item 10). Indicate whether the payment has been made (actual) or will be made (planned). Check all boxes that apply. If this is a material change report, enter the cumulative amount of payment made or planned to be made.

12. Check the appropriate box(es). Check all boxes that apply. If payment is made through an in-kind contribution, specify the nature and value of the in-kind payment.
13. Check the appropriate box(es). Check all boxes that apply. If other, specify nature.
14. Provide a specific and detailed description of the services that the lobbyist has performed or will be expected to perform and the date(s) of any services rendered. Include all preparatory and related activity not just time spent in actual contact with federal officials. Identify the federal officer(s) or employee(s) contacted or the officer(s) employee(s) or Member(s) of Congress that were contacted.
15. Check whether or not a continuation sheet(s) is attached.
16. The certifying official shall sign and date the form, print his/her name title and telephone number.

Public reporting burden for this collection of information is estimated to average 30 minutes per response, including time for reviewing instruction, searching existing data sources, gathering and maintaining the data needed, and completing and reviewing the collection of information. Send comments regarding the burden estimate or any other aspect of this collection of information, including suggestions for reducing this burden, to the Office of Management and Budget, Paperwork Reduction Project (0348-0046), Washington, D.C. 20503.

SF-LLL-Instructions Rev. 06-04-90«ENDIF»

LOCAL AGENCY BIDDER-UDBE COMMITMENT (CONSTRUCTION CONTRACTS) – INFORMATION (LOCAL ASSISTANCE PROCEDURES MANUAL – Exhibit 15-G (1))

Must be submitted with your bid proposal on bid opening day.

Exhibit 15-G1 Local Agency Bidder UDBE Commitment (Construction Contracts)

NOTE: PLEASE REFER TO INSTRUCTIONS ON THE REVERSE SIDE OF THIS FORM

AGENCY:_____ LOCATION:_____

PROJECT DESCRIPTION: _____

TOTAL CONTRACT AMOUNT: $_____

BID DATE:_____

BIDDER'S NAME:_____

CONTRACT UDBE GOAL: _____

CONTRACT ITEM NO.	ITEM OF WORK AND DESCRIPTION OR SERVICES TO BE SUBCONTRACTED OR MATERIALS TO BE PROVIDED	Cert. No. of UDBE AND EXPIRATION DATE	NAME OF UDBEs (Must be certified on the date bids are opened - include UDBE address and phone number)	DOLLAR AMOUNT UDBE

For Local Agency to Complete:

Local Agency Contract Number: _____

Federal Aid Project Number: _____

Federal Share: _____

Contract Award Date: _____

Local Agency certifies that all information is complete and accurate.

_____ _____ _____

Print Name Signature Date

Local Agency Representative

(Area Code) Telephone Number: _____

Total Claimed Participation

$_____

_____%

_____

Signature of Bidder

_____

Date (Area Code) Tel. No.

For Caltrans Review:

_____ _____ _____

Print Name Signature Date

Caltrans District Local Assistance Engineer

Local Agency Bidder - UDBE Commitment (Rev 3/09)

Distribution: (1) Copy – Fax or scan a copy to the Caltrans District Local Assistance Engineer (DLAE) within 15 days of award. Failure to send a copy to the DLAE within 15 days of award may result in de-obligation of funds for this project.
(2) Copy -- Include in award package to Caltrans District Local Assistance
(3) Original – Local agency files

INSTRUCTIONS - LOCAL AGENCY BIDDER
UDBE COMMITMENT (CONSTRUCTION CONTRACTS) (Revised 03/09)

ALL BIDDERS:

PLEASE NOTE: It is the bidder's responsibility to verify that the UDBE(s) falls into one of the following groups in order to count towards the UDBE contract goal: 1) Black American; 2) Asian-Pacific American; 3) Native American; 4) Women. This information must be submitted with your bid proposal. If it is not, and you are the apparent low bidder or the second or third low bidder, it must submitted and received as specified in the Special Provisions. Failure to submit the required UDBE commitment will be grounds for finding the proposal nonresponsive

UDBE is a firm meeting the definition of a DBE as specified in 49 CFR and is one of the following groups:

1. Black American
2. Asian-Pacific American
3. Native American
4. Women

The form requires specific information regarding the construction contract: Agency, Location, Project Description, Federal Aid Project Number (assigned by Caltrans-Local Assistance), Total Contract Amount, Bid Date, Bidder's Name, and Contract Goal.

The form has a column for the Contract Item Number (or Item No's) and Item of Work and Description or Services to be Subcontracted or Materials to be provided by UDBEs. The UDBE should provide a certification number to the Contractor and expiration date. The form has a column for the Names of UDBE contractors to perform the work (who must be certified on the date bids are opened and include the UDBE address and phone number). Enter the UDBE prime's and subcontractors' certification numbers. Prime contractors shall indicate all work to be performed by UDBEs including, if the prime is a UDBE, work performed by its own forces.

IMPORTANT: Identify **all** UDBE firms being participating in the project regardless of tier. Names of the First Tier UDBE Subcontractors and their respective item(s) of work listed should be consistent, where applicable, with the names and items of work in the "List of Subcontractors" submitted with your bid. Provide copies of the UDBEs' quotes, and if applicable, a copy of joint venture agreements pursuant to the Subcontractors Listing Law and the Special Provisions.

There is a column for the total UDBE dollar amount. Enter the Total Claimed UDBE Participation dollars and percentage amount of items of work submitted with your bid pursuant to the Special Provisions. (If 100% of item is not to be performed or furnished by the UDBE, describe exact portion of time to be performed or furnished by the UDBE.) See Section "Disadvantaged Business Enterprise (DBE)," of the Special Provisions (construction contracts); to determine how to count the participation of UDBE firms.

Exhibit 15-G (1) must be signed and dated by the person bidding. Also list a phone number in the space provided and print the name of the person to contact.

Local agencies should complete the Contract Award Date and Federal Share fields and verify that all information is complete and accurate before signing and sending a copy of the form to the District Local Assistance Engineer within 15 days of award. Failure to submit a completed and accurate form within the 15-day time period may result in the de-obligation of funds on this project.

District DBE Coordinator should verify that all information is complete and accurate. Once the information has been verified, the **District Local Assistance Engineer** signs and dates the form.

LOCAL AGENCY BIDDER-DBE INFORMATION (CONSTRUCTION CONTRACTS) – INFORMATION (LOCAL ASSISTANCE PROCEDURES MANUAL – Exhibit 15-G (2))

Exhibit 15-G2 Local Agency Bidder DBE Information (Construction Contracts)

(Inclusive of all DBEs including the UDBEs listed at bid proposal)

NOTE: PLEASE REFER TO INSTRUCTIONS ON THE REVERSE SIDE OF THIS FORM

AGENCY:_____ LOCATION:_____

PROJECT DESCRIPTION: _____

TOTAL CONTRACT AMOUNT: $_____

BID DATE:_____

BIDDER'S NAME:_____

CONTRACT ITEM NO.	ITEM OF WORK AND DESCRIPTION OR SERVICES TO BE SUBCONTRACTED OR MATERIALS TO BE PROVIDED	DBE Cert. No. AND EXPIRATION DATE	NAME OF DBEs (Must be certified on the date bids are opened - include DBE address and phone number)	DOLLAR AMOUNT DBE

For Local Agency to Complete:

Local Agency Contract Number: _____

Federal Aid Project Number: _____

Federal Share: _____

Contract Award Date: _____

Local Agency certifies that the DBE certification(s) has been verified and all information is complete and accurate.

_____ _____ _____

Print Name Signature Date

Local Agency Representative

(Area Code) Telephone Number: _____

Total Claimed Participation $_____

_____%

_____

Signature of Bidder

_____

Date (Area Code) Tel. No.

For Caltrans Review:

_____ _____ _____

Print Name Signature Date

Caltrans District Local Assistance Engineer

Local Agency Bidder DBE Information (Rev 3/09)

Distribution: (1) Copy – Fax or scan a copy to the Caltrans District Local Assistance Engineer (DLAE) within 15 days of contract execution. Failure to send a copy to the DLAE within 15 days of contract execution may result in de-obligation of funds for this project.
(2) Copy -- Include in award package to Caltrans District Local Assistance (3) Original – Local agency files

INSTRUCTIONS - LOCAL AGENCY BIDDER DBE INFORMATION (CONSTRUCTION CONTRACTS) (Revised 03/09)

SUCCESSFUL BIDDER:

The form requires specific information regarding the construction contract: Agency, Location, Project Description, Federal Aid Project Number (assigned by Caltrans-Local Assistance), Total Contract Amount, Bid Date, Bidder's Name, and Contract Goal.

The form has a column for the Contract Item Number (or Item No's) and Item of Work and Description or Services to be Subcontracted or Materials to be provided by DBEs. The DBE should provide a certification number to the Contractor and expiration date. The DBE contractors should notify the Contractor in writing with the date of the decertification if their status should change during the course of the contract. The form has a column for the Names of DBE certified contractors to perform the work (must be certified on the date bids are opened and include DBE address and phone number). Enter DBE prime and subcontractors certification number. Prime contractors shall indicate all work to be performed by DBEs including work performed by its own forces if a DBE.

IMPORTANT: Identify **all** DBE firms participating in the project--including all UDBEs listed on the UDBE Commitment form (Exhibit 15G(1)), regardless of tier. Names of the First Tier DBE Subcontractors and their respective item(s) of work listed should be consistent, where applicable, with the names and items of work in the "List of Subcontractors" submitted with your bid.

There is a column for the total DBE dollar amount. Enter the Total Claimed DBE Participation dollars and percentage amount of items of work submitted with your bid pursuant to the Special Provisions. (If 100% of item is not to be performed or furnished by the DBE, describe exact portion of time to be performed or furnished by the DBE.) See Section "Disadvantaged Business Enterprise (DBE)," of the Special Provisions (construction contracts); to determine how to count the participation of DBE firms.

Exhibit 15-G (2) must be signed and dated by the successful bidder. Also list a phone number in the space provided and print the name of the person to contact.

Local agencies should complete the Contract Award Date, Federal Share, Contract and Project Number fields, and verify that all information is complete and accurate before signing and sending a copy of the form to the District Local Assistance Engineer within 15 days of contract execution. Failure to submit a completed and accurate form within the 15-day time period may result in the de-obligation of funds on this project.

District DBE Coordinator should verify that all information is complete and accurate. Once the information has been verified, the **District Local Assistance Engineer** signs and dates the form.

DISADVANTAGE BUSINESS ENTERPRISES (DBE) CERTIFICATION STATUS CHANGE (LOCAL ASSISTANCE PROCEDURES MANUAL – EXHIBIT 17-O)

STATE OF CALIFORNIA – DEPARTMENT OF TRANSPORTATION

DISADVANTAGED BUSINESS ENTERPRISES (DBE) CERTIFICATION STATUS CHANGE

CP-CEM-2403(F) (New. 10/99)

CONTACT NUMBER	COUNTY	ROUTE	POST MILES	ADMINISTERING AGENCY	CONTRACT COMPETION DATE
PRIME CONTRACTOR			BUSINESS ADDRESS		ESTIMATED CONTRACT AMOUNT

Prime Contractor: List all DBEs with changes in certification status (certified/decertified) while in your employ, whether or not firms were originally listed for good credit.

Attach DBE certification/Decertification letter in accordance with the Special Provisions

CONTRACT ITEM NO.	SUBCONTRACT NAME AND BUSINESS ADDRESS	BUSINESS PHONE	CERTIFICATION NUMBER	AMOUNT PAID WHILE CERTIFIED	CERTIFICATION/ DECERTIFICATION DATE Letter attached
				$	
				$	
				$	
				$	
				$	
				$	
				$	
				$	
				$	

Comments:

I CERTIFY THAT THE ABOVE INFORMATION IS COMPLETE AND CORRECT

CONTRACTOR REPRESENTATIVE SIGNATURE	TITLE	BUSINESS PHONE NUMBER	DATE

TO THE BEST OF MY KNOWLEDGE, THE ABOVE INFORMATION IS COMPLETE AND CORRECT

RESIDENT ENGINEER	BUSINESS PHONE NUMBER	DATE

DISTRIBUTION Original copy -DLAE

Copy -1) Business Enterprise Program 2) Prime Contactor 3) Local Agency 4) Resident Engineer

Form CP-CEM 2403(F) (New 10/99)
DISADVANTAGED BUSINESS ENTERPRISES (DBE) CHANGE IN CERTIFICATION STATUS REPORT

The top of the form requires specific information regarding the construction project: Contract Number, County, Route, Post Miles, the Administering Agency, the Contract Completion Date, and the Estimated Contract Amount. It requires the Prime Contractor's name and Business Address. The focus of the form is to substantiate and verify the actual DBE dollar amount paid to contractors on federally funded projects that had a changed in Certification status during the course of the completion of the contract. The two situations that are being addressed by CP-CEM 2403(F) are, if a firm certified as a DBE and doing work on the contract during the course of the project becomes Decertified, and if a non-DBE firm doing work on the contract during the course of the project becomes Certified as a DBE.

The form has a column to enter the Contract Item No (or Item Nos.) as well as a column for the Subcontractor's Name, Business Address, Business Phone, and contractor's Certification Number.

The column entitled Amount Paid While Certified will be used to enter the actual dollar value of the work performed by those contractors who meet the conditions as outlined above during the time period they are Certified as a DBE. This column on the CP-CEM-2403(F) should only reflect the dollar value of work performed while the firm was Certified as a DBE.

The column called Certification/Decertification Date (Letter attached) will reflect either the date of the Decertification Letter sent out by the Civil Rights Program or the date of the Certification Certificate mailed out by the Civil Rights Program. There is a box to check that support documentation is attached to the CP-CEM-2403 (F) form.

There is a Comments section for any additional information that may need to be provided regarding any of the above transactions.

The CEM-2403(F) has an area at the bottom where the Contractor and the Resident Engineer sign and date that the information provided is complete and correct.

There is a Comments section for any additional information that may need to be provided regarding any of the above transactions.

The CEM-2403(F) has an area at the bottom where the Contractor and the Resident Engineer sign and date that the information provided is complete and correct.

EXHIBIT 15-H UDBE INFORMATION-GOOD FAITH EFFORTS (LOCAL ASSISTANCE PROCEDURES MANUAL – EXHIBIT 15-H)

Must be submitted with your bid proposal on bid opening day.

EXHIBIT 15-H UDBE INFORMATION—GOOD FAITH EFFORTS

Federal-aid Project No. CML -5332(018) Bid Opening Date _____

The _____(City of Saratoga)_____established an Under-utilized Disadvantaged Business Enterprise (UDBE) goal of 3.05% for this project. The information provided herein shows that a good faith effort was made.

Lowest, second lowest and third lowest bidders shall submit the following information to document adequate good faith efforts. Bidders should submit the following information even if the "Local Agency Bidder – UDBE Commitment" form indicates that the bidder has met the UDBE goal. This will protect the bidder's eligibility for award of the contract if the administering agency determines that the bidder failed to meet the goal for various reasons, e.g., a UDBE firm was not certified at bid opening, or the bidder made a mathematical error.

Submittal of only the "Local Agency Bidder – UDBE Commitment" form may not provide sufficient documentation to demonstrate that adequate good faith efforts were made.

The following items are listed in the Section entitled "Submission of UDBE Commitment" of the Special Provisions:

A. The names and dates of each publication in which a request for UDBE participation for this project was placed by the bidder (please attach copies of advertisements or proofs of publication):

Publications	Dates of Advertisement

B. The names and dates of written notices sent to certified UDBEs soliciting bids for this project and the dates and methods used for following up initial solicitations to determine with certainty whether the UDBEs were interested (please attach copies of solicitations, telephone records, fax confirmations, etc.):

Names of UDBEs Solicited	Date of Initial Solicitation	Follow Up Methods and Dates

_____
_____
_____
_____

C. The items of work which the bidder made available to UDBE firms, including, where appropriate, any breaking down of the contract work items (including those items normally performed by the bidder with its own forces) into economically feasible units to facilitate UDBE participation. It is the bidder's responsibility to demonstrate that sufficient work to facilitate UDBE participation was made available to UDBE firms.

Items of Work	Bidder Normally Performs Item (Y/N)	Breakdown of Items	Amount ($)	Percentage Of Contract

D. The names, addresses and phone numbers of rejected UDBE firms, the reasons for the bidder's rejection of the UDBEs, the firms selected for that work (please attach copies of quotes from the firms involved), and the price difference for each UDBE if the selected firm is not a UDBE:

Names, addresses and phone numbers of rejected UDBEs and the reasons for the bidder's rejection of the UDBEs:

_____
_____
_____
_____

Names, addresses and phone numbers of firms selected for the work above:

_____
_____
_____
_____

E. Efforts made to assist interested UDBEs in obtaining bonding, lines of credit or insurance, and any technical assistance or information related to the plans, specifications and requirements for the work which was provided to UDBEs:

_____
_____
_____
_____

F. Efforts made to assist interested UDBEs in obtaining necessary equipment, supplies, materials, or related assistance or services, excluding supplies and equipment the UDBE subcontractor purchases or leases from the prime contractor or its affiliate:

_____

_____

_____

_____

G. The names of agencies, organizations or groups contacted to provide assistance in contacting, recruiting and using UDBE firms (please attach copies of requests to agencies and any responses received, i.e., lists, Internet page download, etc.):

FINAL REPORT UTILIZATION OF DISADVANTAGE BUSINESSES (LOCAL ASSISTANCE PROCEDURES MANUAL – EXHIBIT 17-F)

Must be submitted at the end of the project.

STATE OF CALIFORNIA • DEPARTMENT OF TRANSPORTATION

FINAL REPORT - UTILIZATION OF DISADVANTAGED BUSINESS ENTERPRISES (DBE), FIRST-TIER SUBCONTRACTORS

CEM-2402F (REV 02/2008)

ADA Notice

For individuals with sensory disabilities, this document is available in alternate formats. For information call (916) 654-6410 or TDD (916) 654-3880 or write Records and Forms Management, 1120 N Street, MS-89, Sacramento, CA 95814.

CONTRACT NUMBER	COUNTY	ROUTE	POST MILES	FEDERAL AID PROJECT NUMBER	ADMINISTERING AGENCY	CONTRACT COMPLETION DATE

PRIME CONTRACTOR	BUSINESS ADDRESS	ESTIMATED CONTRACT AMOUNT
		$

ITEM NO.	DESCRIPTION OF WORK PERFORMED AND MATERIALS PROVIDED	COMPANY NAME AND BUSINESS ADDRESS	DBE CERT. NUMBER	CONTRACT PAYMENTS						DATE WORK COMPLETE	DATE OF FINAL PAYMENT
				NON-DBE	DBE	BA UDBE	APA UDBE	NA UDBE	W UDBE		
				$	$	$	$	$	$		
				$	$	$	$	$	$		
				$	$	$	$	$	$		
				$	$	$	$	$	$		
				$	$	$	$	$	$		
				$	$	$	$	$	$		
				$	$	$	$	$	$		
				$	$	$	$	$	$		
				$	$	$	$	$	$		
				$	$	$	$	$	$		
			TOTAL	$	$	$	$	$	$		

ORIGINAL COMMITMENT

$ _____

UDBE

BA - Black American
APA - Asian-Pacific Islander
NA - Native American
W - Woman

List all First Tier Subcontractors, Disadvantaged Business Enterprises (DBEs) and underutilized DBEs (UDBEs) regardless of tier, whether or not the firms were originally listed for goal credit. If actual UDBE utilization (or item of work) was different than that approved at time of award, provide comments on back of form. List actual amount paid to each entity.

I CERTIFY THAT THE ABOVE INFORMATION IS COMPLETE AND CORRECT

CONTRACTOR REPRESENTATIVE'S SIGNATURE	BUSINESS PHONE NUMBER	DATE

TO THE BEST OF MY INFORMATION AND BELIEF, THE ABOVE INFORMATION IS COMPLETE AND CORRECT

RESIDENT ENGINEER'S SIGNATURE	BUSINESS PHONE NUMBER	DATE

COPY DISTRIBUTION - Caltrans contracts: **Original** - District Construction; **Copy** - Business Enterprise Program; **Copy** - Contractor; **Copy** - Resident Engineer

COPY DISTRIBUTION - Local Agency contracts: **Original** - District Local Assistance Engineer (submitted with the Report of Expenditures); **Copy** - District Local Assistance Engineer; **Copy** - Local Agency file

STATE OF CALIFORNIA • DEPARTMENT OF TRANSPORTATION

FINAL REPORT - UTILIZATION OF DISADVANTAGED BUSINESS ENTERPRISES (DBE), FIRST-TIER SUBCONTRACTORS

CEM-2402F (REV 02/2008)

The form requires specific information regarding the construction project: Contract Number, County, Route, Post Miles, Aid Project number, the Administering Agency, the Contract Completion Date and the Estimated Contract Amount. It req prime contractor name and business address. The focus of the form is to describe who did what by contract item numbe descriptions, asking for specific dollar values of item work completed broken down by subcontractors who performed the both DBE and non-DBE work forces. DBE prime contractors are required to show the date of work performed by their ow along with the corresponding dollar value of work.

The form has a column to enter the Contract Item No. (or Item No's) and description of work performed or materials provi well as a column for the subcontractor name and business address. For those firms who are DBE, there is a column to e DBE Certification Number. The DBE should provide their certification number to the contractor and notify the contractor i with the date of the decertification if their status should change during the course of the project.

The form has six columns for the dollar value to be entered for the item work performed by the subcontractor.

The Non-DBE column is used to enter the dollar value of work performed for firms who are not certified DBE.

The decision of which column to be used for entering the DBE dollar value is based on what program(s) status th certified. This program status is determined by the California Unified Certification Program by ethnicity, gender, ownership and control issues at time of certification. To confirm the certification status and program status, acce Department of Transportation Civil Rights website at http://www.dot.ca.gov/hq/bep or by calling (916) 324-1700 o free number at (888) 810-6346.

Based on this DBE Program status, the following table depicts which column to be used:

DBE Program Status	Column to be used
If program status shows DBE only with no other programs listed.	DBE
If program status shows DBE, Black American	BA UDBE
If program status shows DBE, Asian-Pacific Islander	APA UDBE
If program status shows DBE, Native American	NA UDBE
If program status shows DBE, Woman	W UDBE

If a contractor performing work as a DBE on the project becomes decertified and still performs work after their decertifica enter the total value performed by this contractor under the appropriate DBE identification column.

If a contractor performing work as a non-DBE on the project becomes certified as a DBE, enter the dollar value of all wor performed after certification as a DBE under the appropriate identification column.

Enter the total of each of the six columns on Form CEM-2402(F).

Any changes to DBE certification must also be submitted on Form CEM-2403(F).

Enter the Date Work Completed as well as the Date of Final Payment (the date when the prime contractor made the "fina payment" to the subcontractor for the portion of work listed as being completed).

The contractor and the resident engineer sign and date the form indicating that the information provided is complete and

PROOF COPY

RETURN TO HQ FORMS

OK X_____

Date _____

BIDDER'S LIST (49 CFR, Part 26.11)
(LOCAL ASSISTANCE PROCEDURES MANUAL – EXHIBIT 12-G)

BIDDER'S LIST OF SUBCONTRACTORS (DBE and NON-DBE)- PART I

The bidder shall list all subcontractors (both DBE and non-DBE) in accordance with Section 2-1.054 of the Standard Specifications and per Title 49, Section 26.11 of the Code of Federal Regulations. This listing is required in addition to listing DBE Subcontractors elsewhere in the proposal. **Photocopy this form for additional firms.**

Firm Name/ Address/ City, State, ZIP	Phone/ Fax	Annual Gross Receipts	Description of Portion of Work to be Performed	Local Agency Use Only (Certified DBE?)
Name	*Phone*	☐ < $1 million		☐YES
		☐ < $5 million		☐NO
Address		☐ < $10 million		*If YES list DBE #:*
	Fax	☐ < $15 million		
City State ZIP		☐ > $15 million		Age of Firm (Yrs.)
Name	*Phone*	☐ < $1 million		☐YES
		☐ < $5 million		☐NO
Address		☐ < $10 million		*If YES list DBE #:*
	Fax	☐ < $15 million		
City State ZIP		☐ > $15 million		Age of Firm (Yrs.)
Name	*Phone*	☐ < $1 million		☐YES
		☐ < $5 million		☐NO
Address		☐ < $10 million		*If YES list DBE #:*
	Fax	☐ < $15 million		
City State ZIP		☐ > $15 million		Age of Firm (Yrs.)
Name	*Phone*	☐ < $1 million		☐YES
		☐ < $5 million		☐NO
Address		☐ < $10 million		*If YES list DBE #:*
	Fax	☐ < $15 million		
City State ZIP		☐ > $15 million		Age of Firm (Yrs.)

Distribution: 1) Original - Local Agency File

BIDDER'S LIST OF SUBCONTRACTORS (DBE and NON-DBE)- PART II

The bidder shall list all subcontractors who provided a quote or bid but were not selected to participate as a subcontractor on this project. This is required for compliance with Title 49, Section 26 of the Code of Federal Regulations. Photocopy this form for additional firms.

Firm Name/ Address/ City, State, ZIP	Phone/ Fax	Annual Gross Receipts	Description of Portion of Work to be Performed	Local Agency Use Only (Certified DBE?)
Name	*Phone*	☐ < $1 million		☐YES
		☐ < $5 million		☐NO
Address		☐ < $10 million		*If YES list DBE #:*
	Fax	☐ < $15 million		
City State ZIP		☐ > $15 million		Age of Firm (Yrs.)
Name	*Phone*	☐ < $1 million		☐YES
		☐ < $5 million		☐NO
Address		☐ < $10 million		*If YES list DBE #:*
	Fax	☐ < $15 million		
City State ZIP		☐ > $15 million		Age of Firm (Yrs.)
Name	*Phone*	☐ < $1 million		☐YES
		☐ < $5 million		☐NO
Address		☐ < $10 million		*If YES list DBE #:*
	Fax	☐ < $15 million		
City State ZIP		☐ > $15 million		Age of Firm (Yrs.)
Name	*Phone*	☐ < $1 million		☐YES
		☐ < $5 million		☐NO
Address		☐ < $10 million		*If YES list DBE #:*
	Fax	☐ < $15 million		
City State ZIP		☐ > $15 million		Age of Firm (Yrs.)

Distribution: 1) Original – Local Agency File

GENERAL.—The work herein proposed will be financed in whole or in part with Federal funds, and therefore all of the statutes, rules and regulations promulgated by the Federal Government and applicable to work financed in whole or in part with Federal funds will apply to such work. The "Required Contract Provisions, Federal-Aid Construction Contracts, "Form FHWA 1273, are included in this Section 14. Whenever in said required contract provisions references are made to "SHA contracting officer", "SHA resident engineer", or "authorized representative of the SHA", such references shall be construed to mean "Engineer" as defined in Section 1-1.18 of the Standard Specifications.

PERFORMANCE OF PREVIOUS CONTRACT.—In addition to the provisions in Section II, "Nondiscrimination," and Section VII, "Subletting or Assigning the Contract," of the required contract provisions, the Contractor shall comply with the following:

The bidder shall execute the CERTIFICATION WITH REGARD TO THE PERFORMANCE OF PREVIOUS CONTRACTS OR SUBCONTRACTS SUBJECT TO THE EQUAL OPPORTUNITY CLAUSE AND THE FILING OF REQUIRED REPORTS located in the proposal. No request for subletting or assigning any portion of the contract in excess of $10,000 will be considered under the provisions of Section VII of the required contract provisions unless such request is accompanied by the CERTIFICATION referred to above, executed by the proposed subcontractor.

NON-COLLUSION PROVISION.—The provisions in this section are applicable to all contracts except contracts for Federal Aid Secondary projects.

Title 23, United States Code, Section 112, requires as a condition precedent to approval by the Federal Highway Administrator of the contract for this work that each bidder file a sworn statement executed by, or on behalf of, the person, firm, association, or corporation to whom such contract is to be awarded, certifying that such person, firm, association, or corporation has not, either directly or indirectly, entered into any agreement, participated in any collusion, or otherwise taken any action in restraint of free competitive bidding in connection with the submitted bid. A form to make the non-collusion affidavit statement required by Section 112 as a certification under penalty of perjury rather than as a sworn statement as permitted by 28, USC, Sec. 1746, is included in the proposal.

PARTICIPATION BY MINORITY BUSINESS ENTERPRISES IN SUBCONTRACTING.—Part 26, Title 49, Code of Federal Regulations applies to this Federal-aid project. Pertinent sections of said Code are incorporated in part or in its entirety within other sections of these special provisions.

Schedule B—Information for Determining Joint Venture Eligibility

(This form need not be filled in if all joint venture firms are minority owned.)

1. Name of joint venture _____

_____

2. Address of joint venture _____

_____

3. Phone number of joint venture _____

_____

4. Identify the firms, which comprise the joint venture. (The MBE partner must complete Schedule A.) _____

_____

a. Describe the role of the MBE firm in the joint venture.

_____

_____

b. Describe very briefly the experience and business qualifications of each non-MBE joint venturer: _____

_____

5. Nature of the joint venture's business _____

_____

6. Provide a copy of the joint venture agreement.

7. What is the claimed percentage of MBE ownership? ___

_____

8. Ownership of joint venture: (This need not be filled in if described in the joint venture agreement, provided by question 6.).

Revised 3-95
08-07-95

a. Profit and loss sharing.
b. Capital contributions, including equipment.
c. Other applicable ownership interests.

9. Control of and participation in this contract. Identify by name, race, sex, and "firm" those individuals (and their titles) who are responsible for day-to-day management and policy decision-making, including, but not limited to, those with prime responsibility for:

a. Financial decisions _____

_____

b. Management decisions, such as:

1. Estimating _____

_____

2. Marketing and sales _____

_____

3. Hiring and firing of management personnel ___

_____

4. Purchasing of major items or supplies _____

_____

c. Supervision of field operations _____

_____

Note.—If, after filing this Schedule B and before the completion of the joint venture's work on the contract covered by this regulation, there is any significant change in the information submitted, the joint venture must inform the grantee, either directly or through the prime contractor if the joint venture is a subcontractor.

Affidavit

"The undersigned swear that the foregoing statements are correct and include all material information necessary to identify and explain the terms and operation of our joint venture and the intended participation by each joint venturer in the undertaking. Further, the undersigned covenant and agree to provide to grantee current, complete and accurate information regarding actual joint venture work and the payment therefore and any proposed changes in any of the joint venture arrangements and to permit the audit and examination of the books, records and files of the joint venture, or those of each joint venturer relevant to the joint venture, by authorized representatives of the grantee or the Federal funding agency. Any material misrepresentation will be grounds for terminating any contract which may be awarded and for initiating action under Federal or State laws concerning false statements."

.....	.....
Name of Firm	Name of Firm
.....	.....
Signature	Signature
.....	.....
Name	Name
.....	.....
Title	Title
.....	.....
Date	Date

Date _____

State of _____

County of _____

On this ____ day of _____, 19 __, before me appeared (Name) _____, to me personally known, who, being duly sworn, did execute the foregoing affidavit, and did state that he or she was properly authorized by (Name of firm) _____ to execute the affidavit and did so as his or her free act and deed.

Notary Public _____

Commission expires _____

[Seal]

Date _____

State of _____

County of _____

On this ___ day of _____, 19 __, before me appeared (Name) _____ to me personally known, who, being duly sworn, did execute the foregoing affidavit, and did state that he or she was properly authorized by (Name of firm) _____ to execute the affidavit and did so as his or her free act and deed.

Notary Public _____

Commission expires _____

[Seal]

Revised 3-95
08-07-95

FR-2

REQUIRED CONTRACT PROVISIONS
FEDERAL-AID CONSTRUCTION CONTRACTS

(Exclusive of Appalachian Contracts)

		Page
I.	General	3
II.	Nondiscrimination	3
III.	Nonsegregated Facilities	5
IV.	Payment of Predetermined Minimum Wage	6
V.	Statements and Payrolls	8
VI.	Record of Materials, Supplies, and Labor	9
VII.	Subletting or Assigning the Contract	9
VIII.	Safety: Accident Prevention	10
IX.	False Statements Concerning Highway Project	10
X.	Implementation of Clean Air Act and Federal Water Pollution Control Act	10
XI.	Certification Regarding Debarment, Suspension, Ineligibility, and Voluntary Exclusion	11
XII.	Certification Regarding Use of Contract Funds for Lobbying	12

ATTACHMENTS

A. Employment Preference for Appalachian Contracts (included in Appalachian contracts only)

I. GENERAL

1. These contract provisions shall apply to all work performed on the contract by the contractor's own organization and with the assistance of workers under the contractor's immediate superintendence and to all work performed on the contract by piecework, station work, or by subcontract.

2. Except as otherwise provided for in each section, the contractor shall insert in each subcontract all of the stipulations contained in these Required Contract Provisions, and further require their inclusion in any lower tier subcontract or purchase order that may in turn be made. The Required Contract Provisions shall not be incorporated by reference in any case. The prime contractor shall be responsible for compliance by any subcontractor or lower tier subcontractor with these Required Contract Provisions.

3. A breach of any of the stipulations contained in these Required Contract Provisions shall be sufficient grounds for termination of the contract.

4. A breach of the following clauses of the Required Contract Provisions may also be grounds for debarment as provided in 29 CFR 5.12:

Section I, paragraph 2;
Section IV, paragraphs 1, 2, 3, 4, and 7;
Section V, paragraphs 1 and 2a through 2g.

5. Disputes arising out of the labor standards provisions of Section IV (except paragraph 5) and Section V of these Required Contract Provisions shall not be subject to the general disputes clause of this contract. Such disputes shall be resolved in accordance with the procedures of the U.S. Department of Labor (DOL) as set forth in 29 CFR 5, 6, and 7. Disputes within the meaning of this clause include disputes between the contractor (or any of its subcontractors) and the contracting agency, the DOL, or the contractor's employees or their representatives.

6. **Selection of Labor:** During the performance of this contract, the contractor shall not:

a. discriminate against labor from any other State, possession, or territory of the United States (except for employment preference for Appalachian contracts, when applicable, as specified in Attachment A), or

b. employ convict labor for any purpose within the limits of the project unless it is labor performed by convicts who are on parole, supervised release, or probation.

II. NONDISCRIMINATION

(Applicable to all Federal-aid construction contracts and to all related subcontracts of $10,000 or more.)

1. **Equal Employment Opportunity:** Equal employment opportunity (EEO) requirements not to discriminate and to take affirmative action to assure equal opportunity as set forth under laws, executive orders, rules, regulations (28 CFR 35, 29 CFR 1630, and 41 CFR 60) and orders of the Secretary of Labor as modified by the provisions prescribed herein, and imposed pursuant to 23 U.S.C. 140 shall constitute the EEO and specific affirmative action standards for the contractor's project activities under this contract. The Equal Opportunity Construction Contract Specifications set forth under 41 CFR 60-4.3 and the provisions of the American Disabilities Act of 1990 (42 U.S.C. 12101 et seq.) set forth under 28 CFR 35 and 29 CFR 1630 are incorporated by reference in this contract. In the execution of this contract, the contractor agrees to comply with the following minimum specific requirement activities of EEO:

a. The contractor will work with the State highway agency (SHA) and the Federal Government in carrying out EEO obligations and in their review of his/her activities under the contract.

b. The contractor will accept as his operating policy the following statement:

"It is the policy of this Company to assure that applicants are employed, and that employees are treated during employment, without regard to their race, religion, sex, color, national origin, age or disability. Such action shall include: employment, upgrading, demotion, or transfer; recruitment or recruitment advertising; layoff or termination; rates of pay or other forms of compensation; and selection for training, including apprenticeship, preapprenticeship, and/or on-the-job training."

2. **EEO Officer:** The contractor will designate and make known to the SHA contracting officers an EEO Officer who will have the responsibility for and must be capable of effectively

Form 1273 — Revised 3-95
08-07-95

administering and promoting an active contractor program of EEO and who must be assigned adequate authority and responsibility to do so.

3. **Dissemination of Policy:** All members of the contractor's staff who are authorized to hire, supervise, promote, and discharge employees, or who recommend such action, or who are substantially involved in such action, will be made fully cognizant of, and will implement, the contractor's EEO policy and contractual responsibilities to provide EEO in each grade and classification of employment. To ensure that the above agreement will be met, the following actions will be taken as a minimum:

a. Periodic meetings of supervisory and personnel office employees will be conducted before the start of work and then not less often than once every six months, at which time the contractor's EEO policy and its implementation will be reviewed and explained. The meetings will be conducted by the EEO Officer.

b. All new supervisory or personnel office employees will be given a thorough indoctrination by the EEO Officer, covering all major aspects of the contractor's EEO obligations within thirty days following their reporting for duty with the contractor.

c. All personnel who are engaged in direct recruitment for the project will be instructed by the EEO Officer in the contractor's procedures for locating and hiring minority group employees.

d. Notices and posters setting forth the contractor's EEO policy will be placed in areas readily accessible to employees, applicants for employment and potential employees.

e. The contractor's EEO policy and the procedures to implement such policy will be brought to the attention of employees by means of meetings, employee handbooks, or other appropriate means.

4. **Recruitment:** When advertising for employees, the contractor will include in all advertisements for employees the notation: "An Equal Opportunity Employer." All such advertisements will be placed in publications having a large circulation among minority groups in the area from which the project work force would normally be derived.

a. The contractor will, unless precluded by a valid bargaining agreement, conduct systematic and direct recruitment through public and private employee referral sources likely to yield qualified minority group applicants. To meet this requirement, the contractor will identify sources of potential minority group employees, and establish with such identified sources procedures whereby minority group applicants may be referred to the contractor for employment consideration.

b. In the event the contractor has a valid bargaining agreement providing for exclusive hiring hall referrals, he is expected to observe the provisions of that agreement to the extent that the system permits the contractor's compliance with EEO contract provisions. (The DOL has held that where implementation of such agreements have the effect of discriminating against minorities or women, or obligates the contractor to do the same, such implementation violates Executive Order 11246, as amended.)

c. The contractor will encourage his present employees to refer minority group applicants for employment. Information and procedures with regard to referring minority group applicants will be discussed with employees.

5. **Personnel Actions:** Wages, working conditions, and employee benefits shall be established and administered, and personnel actions of every type, including hiring, upgrading, promotion, transfer, demotion, layoff, and termination, shall be taken without regard to race, color, religion, sex, national origin, age or disability. The following procedures shall be followed:

a. The contractor will conduct periodic inspections of project sites to ensure that working conditions and employee facilities do not indicate discriminatory treatment of project site personnel.

b. The contractor will periodically evaluate the spread of wages paid within each classification to determine any evidence of discriminatory wage practices.

c. The contractor will periodically review selected personnel actions in depth to determine whether there is evidence of discrimination. Where evidence is found, the contractor will promptly take corrective action. If the review indicates that the discrimination may extend beyond the actions reviewed, such corrective action shall include all affected persons.

d. The contractor will promptly investigate all complaints of alleged discrimination made to the contractor in connection with his obligations under this contract, will attempt to resolve such complaints, and will take appropriate corrective action within a reasonable time. If the investigation indicates that the discrimination may affect persons other than the complainant, such corrective action shall include such other persons. Upon completion of each investigation, the contractor will inform every complainant of all of his avenues of appeal.

6. Training and Promotion:

a. The contractor will assist in locating, qualifying, and increasing the skills of minority group and women employees, and applicants for employment.

b. Consistent with the contractor's work force requirements and as permissible under Federal and State regulations, the contractor shall make full use of training programs, i.e., apprenticeship, and on-the-job training programs for the geographical area of contract performance. Where feasible, 25 percent of apprentices or trainees in each occupation shall be in their first year of apprenticeship or training. In the event a special provision for training is provided under this contract, this subparagraph will be superseded as indicated in the special provision.

c. The contractor will advise employees and applicants for employment of available training programs and entrance requirements for each.

d. The contractor will periodically review the training and promotion potential of minority group and women employees and will encourage eligible employees to apply for such training and promotion.

7. **Unions:** If the contractor relies in whole or in part upon unions as a source of employees, the contractor will use his/her best efforts to obtain the cooperation of such unions to increase opportunities for minority groups and women within the unions, and to effect referrals by such unions of minority and female employees. Actions by the contractor either directly or through a contractor's association acting as agent will include the procedures set forth below:

a. The contractor will use best efforts to develop, in cooperation with the unions, joint training programs aimed toward qualifying more minority group members and women for membership in the unions and increasing the skills of minority group employees and women so that they may qualify for higher paying employment.

b. The contractor will use best efforts to incorporate an EEO clause into each union agreement to the end that such union will be contractually bound to refer applicants without regard to their race, color, religion, sex, national origin, age or disability.

c. The contractor is to obtain information as to the referral practices and policies of the labor union except that to the extent such information is within the exclusive possession of the labor union and such labor union refuses to furnish such information to the contractor, the contractor shall so certify to the SHA and shall set forth what efforts have been made to obtain such information.

d. In the event the union is unable to provide the contractor with a reasonable flow of minority and women referrals within the time limit set forth in the collective bargaining agreement, the contractor will, through independent recruitment efforts, fill the employment vacancies without regard to race, color, religion, sex, national origin, age or disability; making full efforts to obtain qualified and/or qualifiable minority group persons and women. (The DOL has held that it shall be no excuse that the union with which the contractor has a collective bargaining agreement providing for exclusive referral failed to refer minority employees.) In the event the union referral practice prevents the contractor from meeting the obligations pursuant to Executive Order 11246, as amended, and these special provisions, such contractor shall immediately notify the SHA.

8. Selection of Subcontractors, Procurement of Materials and Leasing of Equipment: The contractor shall not discriminate on the grounds of race, color, religion, sex, national origin, age or disability in the selection and retention of subcontractors, including procurement of materials and leases of equipment.

a. The contractor shall notify all potential subcontractors and suppliers of his/her EEO obligations under this contract.

b. Disadvantaged business enterprises (DBE), as defined in 49 CFR 26, shall have equal opportunity to compete for and perform subcontracts which the contractor enters into pursuant to this contract. The contractor will use his best efforts to solicit bids from and to utilize DBE subcontractors or subcontractors with meaningful minority group and female representation among their employees. Contractors shall obtain lists of DBE construction firms from SHA personnel.

c. The contractor will use his best efforts to ensure subcontractor compliance with their EEO obligations.

9. **Records and Reports:** The contractor shall keep such records as necessary to document compliance with the EEO requirements. Such records shall be retained for a period of three years following completion of the contract work and shall be available at reasonable times and places for inspection by authorized representatives of the SHA and the FHWA.

a. The records kept by the contractor shall document the following:

(1) The number of minority and non-minority group members and women employed in each work classification on the project;

(2) The progress and efforts being made in cooperation with unions, when applicable, to increase employment opportunities for minorities and women;

(3) The progress and efforts being made in locating, hiring, training, qualifying, and upgrading minority and female employees; and

(4) The progress and efforts being made in securing the services of DBE subcontractors or subcontractors with meaningful minority and female representation among their employees.

b. The contractors will submit an annual report to the SHA each July for the duration of the project, indicating the number of minority, women, and non-minority group employees currently engaged in each work classification required by the contract work. This information is to be reported on Form FHWA-1391. If on-the-job training is being required by special provision, the contractor will be required to collect and report training data.

III NONSEGREGATED FACILITIES

(Applicable to all Federal-aid construction contracts and to all related subcontracts of $10,000 or more.)

a. By submission of this bid, the execution of this contract or subcontract, or the consummation of this material supply agreement or purchase order, as appropriate, the bidder, Federal-aid construction contractor, subcontractor, material supplier, or vendor, as appropriate, certifies that the firm does not maintain or provide for its employees any segregated facilities at any of its establishments, and that the firm does not permit its employees to perform their services at any location, under its control, where segregated facilities are maintained. The firm agrees that a breach of this certification is a violation of the EEO provisions of this contract. The firm further certifies that no employee will be denied access to adequate facilities on the basis of sex or disability.

b. As used in this certification, the term "segregated facilities" means any waiting rooms, work areas, restrooms and washrooms, restaurants and other eating areas, time clocks, locker rooms, and other storage or dressing areas, parking lots, drinking fountains, recreation or entertainment areas, transportation, and housing facilities provided for employees which are segregated by explicit directive, or are, in fact, segregated on the basis of race, color, religion, national origin, age or disability, because of habit, local custom, or otherwise. The only exception will be for the disabled when the demands for accessibility override (e.g. disabled parking).

Form 1273 — Revised 3-95
08-07-95

c. The contractor agrees that it has obtained or will obtain identical certification from proposed subcontractors or material suppliers prior to award of subcontracts or consummation of material supply agreements of $10,000 or more and that it will retain such certifications in its files.

IV. PAYMENT OF PREDETERMINED MINIMUM WAGE

(Applicable to all Federal-aid construction contracts exceeding $2,000 and to all related subcontracts, except for projects located on roadways classified as local roads or rural minor collectors, which are exempt.)

1. General:

a. All mechanics and laborers employed or working upon the site of the work will be paid unconditionally and not less often than once a week and without subsequent deduction or rebate on any account [except such payroll deductions as are permitted by regulations (29 CFR 3)] issued by the Secretary of Labor under the Copeland Act (40 U.S.C. 276c) the full amounts of wages and bona fide fringe benefits (or cash equivalents thereof) due at time of payment. The payment shall be computed at wage rates not less than those contained in the wage determination of the Secretary of Labor (hereinafter "the wage determination") which is attached hereto and made a part hereof, regardless of any contractual relationship which may be alleged to exist between the contractor or its subcontractors and such laborers and mechanics. The wage determination (including any additional classifications and wage rates conformed under paragraph 2 of this Section IV and the DOL poster (WH-1321) or Form FHWA-1495) shall be posted at all times by the contractor and its subcontractors at the site of the work in a prominent and accessible place where it can be easily seen by the workers. For the purpose of this Section, contributions made or costs reasonably anticipated for bona fide fringe benefits under Section 1(b)(2) of the Davis-Bacon Act (40 U.S.C. 276a) on behalf of laborers or mechanics are considered wages paid to such laborers or mechanics, subject to the provisions of Section IV, paragraph 3b, hereof. Also, for the purpose of this Section, regular contributions made or costs incurred for more than a weekly period (but not less often than quarterly) under plans, funds, or programs, which cover the particular weekly period, are deemed to be constructively made or incurred during such weekly period. Such laborers and mechanics shall be paid the appropriate wage rate and fringe benefits on the wage determination for the classification of work actually performed, without regard to skill, except as provided in paragraphs 4 and 5 of this Section IV.

b. Laborers or mechanics performing work in more than one classification may be compensated at the rate specified for each classification for the time actually worked therein, provided, that the employer's payroll records accurately set forth the time spent in each classification in which work is performed.

c. All rulings and interpretations of the Davis-Bacon Act and related acts contained in 29 CFR 1, 3, and 5 are herein incorporated by reference in this contract.

2. Classification:

a. The SHA contracting officer shall require that any class of laborers or mechanics employed under the contract, which is not listed in the wage determination, shall be classified in conformance with the wage determination.

b. The contracting officer shall approve an additional classification, wage rate and fringe benefits only when the following criteria have been met:

(1) the work to be performed by the additional classification requested is not performed by a classification in the wage determination;

(2) the additional classification is utilized in the area by the construction industry;

(3) the proposed wage rate, including any bona fide fringe benefits, bears a reasonable relationship to the wage rates contained in the wage determination; and

(4) with respect to helpers, when such a classification prevails in the area in which the work is performed.

c. If the contractor or subcontractors, as appropriate, the laborers and mechanics (if known) to be employed in the additional classification or their representatives, and the contracting officer agree on the classification and wage rate (including the amount designated for fringe benefits where appropriate), a report of the action taken shall be sent by the contracting officer to the DOL, Administrator of the Wage and Hour Division, Employment Standards Administration, Washington, D.C. 20210. The Wage and Hour Administrator, or an authorized representative, will approve, modify, or disapprove every additional classification action within 30 days of receipt and so advise the contracting officer or will notify the contracting officer within the 30-day period that additional time is necessary.

d. In the event the contractor or subcontractors, as appropriate, the laborers or mechanics to be employed in the additional classification or their representatives, and the contracting officer do not agree on the proposed classification and wage rate (including the amount designated for fringe benefits, where appropriate), the contracting officer shall refer the questions, including the views of all interested parties and the recommendation of the contracting officer, to the Wage and Hour Administrator for determination. Said Administrator, or an authorized representative, will issue a determination within 30 days of receipt and so advise the contracting officer or will notify the contracting officer within the 30-day period that additional time is necessary

e. The wage rate (including fringe benefits where appropriate) determined pursuant to paragraph 2c or 2d of this Section IV shall be paid to all workers performing work in the additional classification from the first day on which work is performed in the classification.

3. Payment of Fringe Benefits:

a. Whenever the minimum wage rate prescribed in the contract for a class of laborers or mechanics includes a fringe benefit which is not expressed as an hourly rate, the contractor or subcontractors, as appropriate, shall either pay the benefit

as stated in the wage determination or shall pay another bona fide fringe benefit or an hourly case equivalent thereof.

b. If the contractor or subcontractor, as appropriate, does not make payments to a trustee or other third person, he/she may consider as a part of the wages of any laborer or mechanic the amount of any costs reasonably anticipated in providing bona fide fringe benefits under a plan or program, provided, that the Secretary of Labor has found, upon the written request of the contractor, that the applicable standards of the Davis-Bacon Act have been met. The Secretary of Labor may require the contractor to set aside in a separate account assets for the meeting of obligations under the plan or program.

4. Apprentices and Trainees (Programs of the U.S. DOL) and Helpers:

a. Apprentices:

(1) Apprentices will be permitted to work at less than the predetermined rate for the work they performed when they are employed pursuant to and individually registered in a bona fide apprenticeship program registered with the DOL, Employment and Training Administration, Bureau of Apprenticeship and Training, or with a State apprenticeship agency recognized by the Bureau, or if a person is employed in his/her first 90 days of probationary employment as an apprentice in such an apprenticeship program, who is not individually registered in the program, but who has been certified by the Bureau of Apprenticeship and Training or a State apprenticeship agency (where appropriate) to be eligible for probationary employment as an apprentice.

(2) The allowable ratio of apprentices to journeyman-level employees on the job site in any craft classification shall not be greater than the ratio permitted to the contractor as to the entire work force under the registered program. Any employee listed on a payroll at an apprentice wage rate, who is not registered or otherwise employed as stated above, shall be paid not less than the applicable wage rate listed in the wage determination for the classification of work actually performed. In addition, any apprentice performing work on the job site in excess of the ratio permitted under the registered program shall be paid not less than the applicable wage rate on the wage determination for the work actually performed. Where a contractor or subcontractor is performing construction on a project in a locality other than that in which its program is registered, the ratios and wage rates (expressed in percentages of the journeyman-level hourly rate) specified in the contractor's or subcontractor's registered program shall be observed.

(3) Every apprentice must be paid at not less than the rate specified in the registered program for the apprentice's level of progress, expressed as a percentage of the journeyman-level hourly rate specified in the applicable wage determination. Apprentices shall be paid fringe benefits in accordance with the provisions of the apprenticeship program. If the apprenticeship program does not specify fringe benefits, apprentices must be paid the full amount of fringe benefits listed on the wage determination for the applicable classification. If the Administrator for the Wage and Hour Division determines that a different practice prevails for the applicable apprentice classification, fringes shall be paid in accordance with that determination.

(4) In the event the Bureau of Apprenticeship and Training, or a State apprenticeship agency recognized by the Bureau, withdraws approval of an apprenticeship program, the contractor or subcontractor will no longer be permitted to utilize apprentices at less than the applicable predetermined rate for the comparable work performed by regular employees until an acceptable program is approved.

b. Trainees:

(1) Except as provided in 29 CFR 5.16, trainees will not be permitted to work at less than the predetermined rate for the work performed unless they are employed pursuant to and individually registered in a program which has received prior approval, evidenced by formal certification by the DOL, Employment and Training Administration.

(2) The ratio of trainees to journeyman-level employees on the job site shall not be greater than permitted under the plan approved by the Employment and Training Administration. Any employee listed on the payroll at a trainee rate who is not registered and participating in a training plan approved by the Employment and Training Administration shall be paid not less than the applicable wage rate on the wage determination for the classification of work actually performed. In addition, any trainee performing work on the job site in excess of the ratio permitted under the registered program shall be paid not less than the applicable wage rate on the wage determination for the work actually performed.

(3) Every trainee must be paid at not less than the rate specified in the approved program for his/her level of progress, expressed as a percentage of the journeyman-level hourly rate specified in the applicable wage determination. Trainees shall be paid fringe benefits in accordance with the provisions of the trainee program. If the trainee program does not mention fringe benefits, trainees shall be paid the full amount of fringe benefits listed on the wage determination unless the Administrator of the Wage and Hour Division determines that there is an apprenticeship program associated with the corresponding journeyman-level wage rate on the wage determination which provides for less than full fringe benefits for apprentices, in which case such trainees shall receive the same fringe benefits as apprentices.

(4) In the event the Employment and Training Administration withdraws approval of a training program, the contractor or subcontractor will no longer be permitted to utilize trainees at less than the applicable predetermined rate for the work performed until an acceptable program is approved.

c. Helpers:

Helpers will be permitted to work on a project if the helper classification is specified and defined on the applicable wage determination or is approved pursuant to the conformance procedure set forth in Section IV.2. Any worker listed on a payroll at a helper wage rate, who is not a helper under an approved definition, shall be paid not less than the applicable wage rate on the wage determination for the classification of work actually performed.

Form 1273 — Revised 3-95
08-07-95

5. Apprentices and Trainees (Programs of the U.S. DOT):

Apprentices and trainees working under apprenticeship and skill training programs which have been certified by the Secretary of Transportation as promoting EEO in connection with Federal-aid highway construction programs are not subject to the requirements of paragraph 4 of this Section IV. The straight time hourly wage rates for apprentices and trainees under such programs will be established by the particular programs. The ratio of apprentices and trainees to journeymen shall not be greater than permitted by the terms of the particular program.

6. Withholding:

The SHA shall upon its own action or upon written request of an authorized representative of the DOL withhold, or cause to be withheld, from the contractor or subcontractor under this contract or any other Federal contract with the same prime contractor, or any other federally-assisted contract subject to Davis-Bacon prevailing wage requirements which is held by the same prime contractor, as much of the accrued payments or advances as may be considered necessary to pay laborers and mechanics, including apprentices, trainees, and helpers, employed by the contractor or any subcontractor the full amount of wages required by the contract. In the event of failure to pay any laborer or mechanic, including any apprentice, trainee, or helper, employed or working on the site of the work, all or part of the wages required by the contract, the SHA contracting officer may, after written notice to the contractor, take such action as may be necessary to cause the suspension of any further payment, advance, or guarantee of funds until such violations have ceased.

7. Overtime Requirements:

No contractor or subcontractor contracting for any part of the contract work which may require or involve the employment of laborers, mechanics, watchmen, or guards (including apprentices, trainees, and helpers described in paragraphs 4 and 5 above) shall require or permit any laborer, mechanic, watchman, or guard in any workweek in which he/she is employed on such work, to work in excess of 40 hours in such workweek unless such laborer, mechanic, watchman, or guard receives compensation at a rate not less than one-and-one-half times his/her basic rate of pay for all hours worked in excess of 40 hours in such workweek.

8. Violation:

Liability for Unpaid Wages; Liquidated Damages: In the event of any violation of the clause set forth in paragraph 7 above, the contractor and any subcontractor responsible thereof shall be liable to the affected employee for his/her unpaid wages. In addition, such contractor and subcontractor shall be liable to the United States (in the case of work done under contract for the District of Columbia or a territory, to such District or to such territory) for liquidated damages. Such liquidated damages shall be computed with respect to each individual laborer, mechanic, watchman, or guard employed in violation of the clause set forth in paragraph 7, in the sum of $10 for each calendar day on which such employee was required or permitted to work in excess of the standard work week of 40 hours without payment of the overtime wages required by the clause set forth in paragraph 7.

9. Withholding for Unpaid Wages and Liquidated Damages:

The SHA shall upon its own action or upon written request of any authorized representative of the DOL withhold, or cause to be withheld, from any moneys payable on account of work performed by the contractor or subcontractor under any such contract or any other Federal contract with the same prime contractor, or any other federally-assisted contract subject to the Contract Work Hours and Safety Standards Act, which is held by the same prime contractor, such sums as may be determined to be necessary to satisfy any liabilities of such contractor or subcontractor for unpaid wages and liquidated damages as provided in the clause set forth in paragraph 8 above.

V. STATEMENTS AND PAYROLLS

(Applicable to all Federal-aid construction contracts exceeding $2,000 and to all related subcontracts, except for projects located on roadways classified as local roads or rural collectors, which are exempt.)

1. Compliance with Copeland Regulations (29 CFR 3):

The contractor shall comply with the Copeland Regulations of the Secretary of Labor which are herein incorporated by reference.

2. Payrolls and Payroll Records:

a. Payrolls and basic records relating thereto shall be maintained by the contractor and each subcontractor during the course of the work and preserved for a period of 3 years from the date of completion of the contract for all laborers, mechanics, apprentices, trainees, watchmen, helpers, and guards working at the site of the work.

b. The payroll records shall contain the name, social security number, and address of each such employee; his or her correct classification; hourly rates of wages paid (including rates of contributions or costs anticipated for bona fide fringe benefits or cash equivalent thereof the types described in Section 1(b)(2)(B) of the Davis Bacon Act); daily and weekly number of hours worked; deductions made; and actual wages paid. In addition, for Appalachian contracts, the payroll records shall contain a notation indicating whether the employee does, or does not, normally reside in the labor area as defined in Attachment A, paragraph 1. Whenever the Secretary of Labor, pursuant to Section IV, paragraph 3b, has found that the wages of any laborer or mechanic include the amount of any costs reasonably anticipated in providing benefits under a plan or program described in Section 1(b)(2)(B) of the Davis Bacon Act, the contractor and each subcontractor shall maintain records which show that the commitment to provide such benefits is enforceable, that the plan or program is financially responsible, that the plan or program has been communicated in writing to the laborers or mechanics affected, and show the cost anticipated or the actual cost incurred in providing benefits. Contractors or subcontractors employing apprentices or trainees under approved programs shall maintain written evidence of the registration of apprentices and trainees, and ratios and wage rates prescribed in the applicable programs.

c. Each contractor and subcontractor shall furnish, each week in which any contract work is performed, to the SHA resident engineer a payroll of wages paid each of its employees (including apprentices, trainees, and helpers, described in Section IV, paragraphs 4 and 5, and watchmen and guards engaged on work during the preceding weekly payroll period). The payroll submitted shall set out accurately and completely all of the information required to be maintained under paragraph 2b of this Section V. This information may be submitted in any form desired. Optional Form WH-347 is available for this purpose and may be purchased from the Superintendent of Documents (Federal stock number 029-005-0014-1), U.S. Government Printing Office, Washington, D.C. 20402. The prime contractor is responsible for the submission of copies of payrolls by all subcontractors.

d. Each payroll submitted shall be accompanied by a "Statement of Compliance," signed by the contractor or subcontractor or his/her agent who pays or supervises the payment of the persons employed under the contract and shall certify the following:

(1) that the payroll for the payroll period contains the information required to be maintained under paragraph 2b of this Section V and that such information is correct and complete;

(2) that such laborer or mechanic (including each helper, apprentice, and trainee) employed on the contract during the payroll period has been paid the full weekly wages earned, without rebate, either directly or indirectly, and that no deductions have been made either directly or indirectly from the full wages earned, other than permissible deductions as set forth in the Regulations, 29 CFR 3;

(3) that each laborer or mechanic has been paid not less that the applicable wage rate and fringe benefits or cash equivalent for the classification of worked performed, as specified in the applicable wage determination incorporated into the contract.

e. The weekly submission of a properly executed certification set forth on the reverse side of Optional Form WH-347 shall satisfy the requirement for submission of the "Statement of Compliance" required by paragraph 2d of this Section V.

f. The falsification of any of the above certifications may subject the contractor to civil or criminal prosecution under 18 U.S.C. 1001 and 31 U.S.C. 231.

g. The contractor or subcontractor shall make the records required under paragraph 2b of this Section V available for inspection, copying, or transcription by authorized representatives of the SHA, the FHWA, or the DOL, and shall permit such representatives to interview employees during working hours on the job. If the contractor or subcontractor fails to submit the required records or to make them available, the SHA, the FHWA, the DOL, or all may, after written notice to the contractor, sponsor, applicant, or owner, take such actions as may be necessary to cause the suspension of any further payment, advance, or guarantee of funds. Furthermore, failure to submit the required records upon request or to make such records available may be grounds for debarment action pursuant to 29 CFR 5.12.

VI. RECORD OF MATERIALS, SUPPLIES, AND LABOR

1. On all Federal-aid contracts on the National Highway System, except those which provide solely for the installation of protective devices at railroad grade crossings, those which are constructed on a force account or direct labor basis, highway beautification contracts, and contracts for which the total final construction cost for roadway and bridge is less than $1,000,000 (23 CFR 635); the contractor shall:

a. Become familiar with the list of specific materials and supplies contained in Form FHWA-47, "Statement of Materials and Labor Used by Contractor of Highway Construction Involving Federal Funds," prior to the commencement of work under this contract.

b. Maintain a record of the total cost of all materials and supplies purchased for and incorporated in the work, and also of the quantities of those specific materials and supplies listed on Form FHWA-47, and in the units shown on Form FHWA-47.

c. Furnish, upon the completion of the contract, to the SHA resident engineer on Form FHWA-47 together with the data required in paragraph 1b relative to materials and supplies, a final labor summary of all contract work indicating the total hours worked and the total amount earned.

2. At the prime contractor's option, either a single report covering all contract work or separate reports for the contractor and for each subcontract shall be submitted.

VII. SUBLETTING OR ASSIGNING THE CONTRACT

1. The contractor shall perform with its own organization contract work amounting to not less than 30 percent (or a greater percentage if specified elsewhere in the contract) of the total original contract price, excluding any specialty items designated by the State. Specialty items may be performed by subcontract and the amount of any such specialty items performed may be deducted from the total original contract price before computing the amount of work required to be performed by the contractor's own organization (23 CFR 635).

a. "Its own organization" shall be construed to include only workers employed and paid directly by the prime contractor and equipment owned or rented by the prime contractor, with or without operators. Such term does not include employees or equipment of a subcontractor, assignee, or agent of the prime contractor.

b. "Specialty Items" shall be construed to be limited to work that requires highly specialized knowledge, abilities, or equipment not ordinarily available in the type of contracting organizations qualified and expected to bid on the contract as a whole and in general are to be limited to minor components of the overall contract.

Form 1273 — Revised 3-95
08-07-95

2. The contract amount upon which the requirements set forth in paragraph 1 of Section VII is computed includes the cost of material and manufactured products which are to be purchased or produced by the contractor under the contract provisions.

3. The contractor shall furnish (a) a competent superintendent or supervisor who is employed by the firm, has full authority to direct performance of the work in accordance with the contract requirements, and is in charge of all construction operations (regardless of who performs the work) and (b) such other of its own organizational resources (supervision, management, and engineering services) as the SHA contracting officer determines is necessary to assure the performance of the contract.

4. No portion of the contract shall be sublet, assigned or otherwise disposed of except with the written consent of the SHA contracting officer, or authorized representative, and such consent when given shall not be construed to relieve the contractor of any responsibility for the fulfillment of the contract. Written consent will be given only after the SHA has assured that each subcontract is evidenced in writing and that it contains all pertinent provisions and requirements of the prime contract.

VIII. SAFETY: ACCIDENT PREVENTION

1. In the performance of this contract the contractor shall comply with all applicable Federal, State, and local laws governing safety, health, and sanitation (23 CFR 635). The contractor shall provide all safeguards, safety devices and protective equipment and take any other needed actions as it determines, or as the SHA contracting officer may determine, to be reasonably necessary to protect the life and health of employees on the job and the safety of the public and to protect property in connection with the performance of the work covered by the contract.

2. It is a condition of this contract, and shall be made a condition of each subcontract, which the contractor enters into pursuant to this contract, that the contractor and any subcontractor shall not permit any employee, in performance of the contract, to work in surroundings or under conditions which are unsanitary, hazardous or dangerous to his/her health or safety, as determined under construction safety and health standards (29 CFR 1926) promulgated by the Secretary of Labor, in accordance with Section 107 of the Contract Work Hours and Safety Standards Act (40 U.S.C. 333).

3. Pursuant to 29 CFR 1926.3, it is a condition of this contract that the Secretary of Labor or authorized representative thereof, shall have right of entry to any site of contract performance to inspect or investigate the matter of compliance with the construction safety and health standards and to carry out the duties of the Secretary under Section 107 of the Contract Work Hours and Safety Standards Act (40 U.S.C. 333).

IX. FALSE STATEMENTS CONCERNING HIGHWAY PROJECTS

In order to assure high quality and durable construction in conformity with approved plans and specifications and a high degree of reliability on statements and representations made by engineers, contractors, suppliers, and workers on Federal-aid highway projects, it is essential that all persons concerned with the project perform their functions as carefully, thoroughly, and honestly as possible. Willful falsification, distortion, or misrepresentation with respect to any facts related to the project is a violation of Federal law. To prevent any misunderstanding regarding the seriousness of these and similar acts, the following notice shall be posted on each Federal-aid highway project (23 CFR 635) in one or more places where it is readily available to all persons concerned with the project:

NOTICE TO ALL PERSONNEL ENGAGED ON FEDERAL-AID HIGHWAY PROJECTS

18 U.S.C. 1020 reads as follows:

"Whoever being an officer, agent, or employee of the United States, or any State or Territory, or whoever, whether a person, association, firm, or corporation, knowingly makes any false statement, false representation, or false report as to the character, quality, quantity, or cost of the material used or to be used, or the quantity or quality of the work performed or to be performed, or the cost thereof in connection with the submission of plans, maps, specifications, contracts, or costs of construction on any highway or related project submitted for approval to the Secretary of Transportation; or

Whoever knowingly makes any false statement, false representation, false report or false claim with respect to the character, quality, quantity, or cost of any work performed or to be performed, or materials furnished or to be furnished, in connection with the construction of any highway or related project approved by the Secretary of Transportation; or

Whoever knowingly makes any false statement or false representation as to material fact in any statement, certificate, or report submitted pursuant to provisions of the Federal-aid Roads Act approved July 1, 1916, (39 Stat. 355), as amended and supplemented;

Shall be fined not more that $10,000 or imprisoned not more than 5 years or both."

X. IMPLEMENTATION OF CLEAN AIR ACT AND FEDERAL WATER POLLUTION CONTROL ACT

(Applicable to all Federal-aid construction contracts and to all related subcontracts of $100,000 or more.)

By submission of this bid or the execution of this contract, or subcontract, as appropriate, the bidder, Federal-aid construction contractor, or subcontractor, as appropriate, will be deemed to have stipulated as follows:

1. That any facility that is or will be utilized in the performance of this contract, unless such contract is exempt under the Clean Air Act, as amended (42 U.S.C. 1857 et seq., as amended by Pub. L. 91-604), and under the Federal Water Pollution Control Act, as amended (33 U.S.C. 1251 et seq., as amended by Pub. L. 92-500), Executive Order 11738, and regulations in implementation thereof (40 CFR 15) is not listed, on the date of contract award, on the U.S. Environmental Protection Agency (EPA) List of Violating Facilities pursuant to 40 CFR 15.20.

2. That the firm agrees to comply and remain in compliance with all the requirements of Section 114 of the Clean Air Act and Section 308 of the Federal Water Pollution Control Act and all regulations and guidelines listed thereunder.

3. That the firm shall promptly notify the SHA of the receipt of any communication from the Director, Office of Federal Activities, EPA, indicating that a facility that is or will be utilized

for the contract is under consideration to be listed on the EPA List of Violating Facilities.

4. That the firm agrees to include or cause to be included the requirements of paragraph 1 through 4 of this Section X in every nonexempt subcontract, and further agrees to take such action as the government may direct as a means of enforcing such requirements.

XI. CERTIFICATION REGARDING DEBARMENT, SUSPENSION, INELIGIBILITY AND VOLUNTARY EXCLUSION

1. Instructions for Certification - Primary Covered Transactions:

(Applicable to all Federal-aid contracts - 49 CFR 29)

a. By signing and submitting this proposal, the prospective primary participant is providing the certification set out below.

b. The inability of a person to provide the certification set out below will not necessarily result in denial of participation in this covered transaction. The prospective participant shall submit an explanation of why it cannot provide the certification set out below. The certification or explanation will be considered in connection with the department or agency's determination whether to enter into this transaction. However, failure of the prospective primary participant to furnish a certification or an explanation shall disqualify such a person from participation in this transaction.

c. The certification in this clause is a material representation of fact upon which reliance was placed when the department or agency determined to enter into this transaction. If it is later determined that the prospective primary participant knowingly rendered an erroneous certification, in addition to other remedies available to the Federal Government, the department or agency may terminate this transaction for cause of default.

d. The prospective primary participant shall provide immediate written notice to the department or agency to whom this proposal is submitted if any time the prospective primary participant learns that its certification was erroneous when submitted or has become erroneous by reason of changed circumstances.

e. The terms "covered transaction," "debarred," "suspended," "ineligible," "lower tier covered transaction," "participant," "person," "primary covered transaction," "principal," "proposal," and "voluntarily excluded," as used in this clause, have the meanings set out in the Definitions and Coverage sections of rules implementing Executive Order 12549. You may contact the department or agency to which this proposal is submitted for assistance in obtaining a copy of those regulations.

f. The prospective primary participant agrees by submitting this proposal that, should the proposed covered transaction be entered into, it shall not knowingly enter into any lower tier covered transaction with a person who is debarred, suspended, declared ineligible, or voluntarily excluded from participation in this covered transaction, unless authorized by the department or agency entering into this transaction.

g. The prospective primary participant further agrees by submitting this proposal that it will include the clause titled "Certification Regarding Debarment, Suspension, Ineligibility and Voluntary Exclusion-Lower Tier Covered Transaction," provided by the department or agency entering into this covered transaction, without modification, in all lower tier covered transactions and in all solicitations for lower tier covered transactions.

h. A participant in a covered transaction may rely upon a certification of a prospective participant in a lower tier covered transaction that is not debarred, suspended, ineligible, or voluntarily excluded from the covered transaction, unless it knows that the certification is erroneous. A participant may decide the method and frequency by which it determines the eligibility of its principals. Each participant may, but is not required to, check the nonprocurement portion of the "Lists of Parties Excluded From Federal Procurement or Nonprocurement Programs" (Nonprocurement List) which is compiled by the General Services Administration.

i. Nothing contained in the foregoing shall be construed to require establishment of a system of records in order to render in good faith the certification required by this clause. The knowledge and information of participant is not required to exceed that which is normally possessed by a prudent person in the ordinary course of business dealings.

j. Except for transactions authorized under paragraph f of these instructions, if a participant in a covered transaction knowingly enters into a lower tier covered transaction with a person who is suspended, debarred, ineligible, or voluntarily excluded from participation in this transaction, in addition to other remedies available to the Federal Government, the department or agency may terminate this transaction for cause or default.

* * * * *

Certification Regarding Debarment, Suspension, Ineligibility and Voluntary Exclusion—Primary Covered Transactions

1. The prospective primary participant certifies to the best of its knowledge and belief, that it and its principals:

a. Are not presently debarred, suspended, proposed for debarment, declared ineligible, or voluntarily excluded from covered transactions by any Federal department or agency;

b. Have not within a 3-year period preceding this proposal been convicted of or had a civil judgment rendered against them for commission of fraud or a criminal offense in connection with obtaining, attempting to obtain, or performing a public (Federal, State or local) transaction or contract under a public transaction; violation of Federal or State antitrust statutes or commission of embezzlement, theft, forgery, bribery, falsification or destruction of records, making false statements, or receiving stolen property;

c. Are not presently indicted for or otherwise criminally or civilly charged by a governmental entity (Federal, State or local) with commission of any of the offenses enumerated in paragraph 1b of this certification; and

Form 1273 — Revised 3-95
08-07-95

FR-11

d. Have not within a 3-year period preceding this application/proposal had one or more public transactions (Federal, State or local) terminated for cause or default.

2. Where the prospective primary participant is unable to certify to any of the statements in this certification, such prospective participant shall attach an explanation to this proposal.

* * * * *

2. Instructions for Certification - Lower Tier Covered Transactions:

(Applicable to all subcontracts, purchase orders and other lower tier transactions of $25,000 or more - 49 CFR 29)

a. By signing and submitting this proposal, the prospective lower tier is providing the certification set out below.

b. The certification in this clause is a material representation of fact upon which reliance was placed when this transaction was entered into. If it is later determined that the prospective lower tier participant knowingly rendered an erroneous certification, in addition to other remedies available to the Federal Government, the department or agency with which this transaction originated may pursue available remedies, including suspension and/or debarment.

c. The prospective lower tier participant shall provide immediate written notice to the person to which this proposal is submitted if at any time the prospective lower tier participant learns that its certification was erroneous by reason of changed circumstances.

d. The terms "covered transaction," "debarred," "suspended," "ineligible," "primary covered transaction," "participant," "person," "principal," "proposal," and "voluntarily excluded," as used in this clause, have the meanings set out in the Definitions and Coverage sections of rules implementing Executive Order 12549. You may contact the person to which this proposal is submitted for assistance in obtaining a copy of those regulations.

e. The prospective lower tier participant agrees by submitting this proposal that, should the proposed covered transaction be entered into, it shall not knowingly enter into any lower tier covered transaction with a person who is debarred, suspended, declared ineligible, or voluntarily excluded from participation in this covered transaction, unless authorized by the department or agency with which this transaction originated.

f. The prospective lower tier participant further agrees by submitting this proposal that it will include this clause titled "Certification Regarding Debarment, Suspension, Ineligibility and Voluntary Exclusion-Lower Tier Covered Transaction," without modification, in all lower tier covered transactions and in all solicitations for lower tier covered transactions.

g. A participant in a covered transaction may rely upon a certification of a prospective participant in a lower tier covered transaction that is not debarred, suspended, ineligible, or voluntarily excluded from the covered transaction, unless it knows that the certification is erroneous. A participant may decide the method and frequency by which it determines the eligibility of its principals. Each participant may, but is not required to, check the Nonprocurement List.

h. Nothing contained in the foregoing shall be construed to require establishment of a system of records in order to render in good faith the certification required by this clause. The knowledge and information of participant is not required to exceed that which is normally possessed by a prudent person in the ordinary course of business dealings.

i. Except for transactions authorized under paragraph e of these instructions, if a participant in a covered transaction knowingly enters into a lower tier covered transaction with a person who is suspended, debarred, ineligible, or voluntarily excluded from participation in this transaction, in addition to other remedies available to the Federal Government, the department or agency with which this transaction originated may pursue available remedies, including suspension and/or debarment.

* * * * *

Certification Regarding Debarment, Suspension, Ineligibility and Voluntary Exclusion-Lower Tier Covered Transactions

1. The prospective lower tier participant certifies, by submission of this proposal, that neither it nor its principals is presently debarred, suspended, proposed for debarment, declared ineligible, or voluntarily excluded from participation in this transaction by any Federal department or agency.

2. Where the prospective lower tier participant is unable to certify to any of the statements in this certification, such prospective participant shall attach an explanation to this proposal.

* * * * *

XII. CERTIFICATION REGARDING USE OF CONTRACT FUNDS FOR LOBBYING

(Applicable to all Federal-aid construction contracts and to all related subcontracts which exceed $100,000 - 49 CFR 20)

1. The prospective participant certifies, by signing and submitting this bid or proposal, to the best of his or her knowledge and belief, that:

a. No Federal appropriated funds have been paid or will be paid, by or on behalf of the undersigned, to any person for influencing or attempting to influence an officer or employee of any Federal agency, a Member of Congress, an officer or employee of Congress, or an employee of a Member of Congress in connection with the awarding of any Federal contract, the making of any Federal grant, the making of any Federal loan, the entering into of any cooperative agreement, and the extension, continuation, renewal, amendment, or modification of any Federal contract, grant, loan, or cooperative agreement.

b. If any funds other than Federal appropriated funds have been paid or will be paid to any person for influencing or attempting to influence an officer or employee of any Federal agency, a Member of Congress, an officer or employee of Congress, or an employee of a Member of Congress in connection with this Federal contract,

grant, loan, or cooperative agreement, the undersigned shall complete and submit Standard Form-LLL, "Disclosure Form to Report Lobbying," in accordance with its instructions.

2. This certification is a material representation of fact upon which reliance was placed when this transaction was made or entered into. Submission of this certification is a prerequisite for making or entering into this transaction imposed by 31 U.S.C. 1352. Any person who fails to file the required certification shall be subject to a civil penalty of not less than $10,000 and not more than $100,000 for each such failure.

3. The prospective participant also agrees by submitting his or her bid or proposal that he or she shall require that the language of this certification be included in all lower tier subcontracts, which exceed $100,000 and that all such recipients shall certify and disclose accordingly.

FEDERAL-AID FEMALE AND MINORITY GOALS

In accordance with Section II, "Nondiscrimination," of "Required Contract Provisions Federal-aid Construction Contracts" the following are the goals for female utilization:

Goal for Women
(applies nationwide).....(percent) 6.9

The following are goals for minority utilization:

CALIFORNIA ECONOMIC AREA

	Goal (Percent)
174 Redding, CA:	
Non-SMSA Counties	6.8
CA Lassen; CA Modoc; CA Plumas; CA Shasta; CA Siskiyou; CA Tehama.	
175 Eureka, CA:	
Non-SMSA Counties	6.6
CA Del Norte; CA Humboldt; CA Trinity.	
176 San Francisco-Oakland-San Jose, CA:	
SMSA Counties:	
7120 Salinas-Seaside-Monterey, CA....	28.9
CA Monterey.	
7360 San Francisco-Oakland, CA.....	25.6
CA Alameda; CA Contra Costa; CA Marin; CA San Francisco; CA San Mateo.	
7400 San Jose, CA	19.6
CA Santa Clara.	
7485 Santa Cruz, CA.	14.9
CA Santa Cruz.	
7500 Santa Rosa, CA	9.1
CA Sonoma.	
8720 Vallejo-Fairfield- Napa, CA.....	17.1
CA Napa; CA Solano	
Non-SMSA Counties	23.2
CA Lake; CA Mendocino; CA San Benito.	
177 Sacramento, CA:	
SMSA Counties:	
6920 Sacramento, CA.....	16.1
CA Placer; CA Sacramento; CA Yolo.	
Non-SMSA Counties.....	14.3
CA Butte; CA Colusa; CA El Dorado; CA Glenn; CA Nevada; CA Sierra; CA Sutter; CA Yuba.	
178 Stockton-Modesto, CA:	
SMSA Counties:	
5170 Modesto, CA	12.3
CA Stanislaus.	
8120 Stockton, CA	24.3
CA San Joaquin.	
Non-SMSA Counties.....	19.8
CA Alpine; CA Amador; CA Calaveras; CA Mariposa; CA Merced; CA Tuolumne.	
179 Fresno-Bakersfield, CA:	
SMSA Counties:	
0680 Bakersfield, CA	19.1
CA Kern.	
2840 Fresno, CA.....	26.1
CA Fresno.	
Non-SMSA Counties.....	23.6
CA Kings; CA Madera; CA Tulare.	
180 Los Angeles, CA:	
SMSA Counties:	
0360 Anaheim-Santa Ana-Garden Grove, CA.	11.9
CA Orange.	
4480 Los Angeles-Long Beach, CA	28.3
CA Los Angeles.	
6000 Oxnard-Simi Valley-Ventura, CA.....	21.5
CA Ventura.	

Form 1273 — Revised 3-95
08-07-95

6780 Riverside-San Bernardino-
Ontario, CA..... 19.0
CA Riverside;
CA San Bernardino.

7480 Santa Barbara-Santa Maria-
Lompoc, CA 19.7
CA Santa Barbara.

Non-SMSA Counties 24.6
CA Inyo; CA Mono;
CA San Luis Obispo.

181 San Diego, CA:

SMSA Counties

7320 San Diego, CA. 16.9
CA San Diego.

Non-SMSA Counties 18.2
CA Imperial.

In addition to the reporting requirements set forth elsewhere in this contract the Contractor and subcontractors holding subcontracts, not including material suppliers, of $10,000 or more, shall submit for every month of July during which work is performed, employment data as contained under Form FHWA PR-1391 (Appendix C to 23 CFR, Part 230), and in accordance with the instructions included thereon.

Form 1273 — Revised 3-95
08-07-95

FEDERAL WAGE DECISION

General Decision Number: CA120029 03/02/2012 CA29

Superseded General Decision Number: CA20100029

State: California

Construction Types: Building, Heavy (Heavy and Dredging) and Highway

Counties: Alameda, Calaveras, Contra Costa, Fresno, Kings, Madera, Mariposa, Merced, Monterey, San Benito, San Francisco, San Joaquin, San Mateo, Santa Clara, Santa Cruz, Stanislaus and Tuolumne Counties in California.

BUILDING CONSTRUCTION PROJECTS; DREDGING PROJECTS (does not include hopper dredge work); HEAVY CONSTRUCTION PROJECTS (does not include water well drilling); HIGHWAY CONSTRUCTION PROJECTS

Modification Number	Publication Date
0	01/06/2012
1	01/20/2012
2	01/27/2012
3	03/02/2012

ASBE0016-001 08/01/2011

AREA 1: ALAMEDA, CONTRA COSTA, LAKE, MARIN, MENDOCINO, MONTEREY, NAPA, SAN BENITO, SAN FRANCISCO, SAN MATEO, SANTA CLARA, SANTA CRUZ, SOLANO, & SONOMA COUNTIES

AREA 2: ALPINE, AMADOR, BUTTE, CALAVERAS, COLUSA, DEL NORTE, EL DORADO, FRESNO, GLENN, HUMBOLDT, KINGS, LASSEN, MADERA, MARIPOSA, MERCED, MODOC, MONO, NEVADA, PLACER, PLUMAS, SACRAMENTO, SAN JOAQUIN, SHASTA, SIERRA, SISKIYOU, STANISLAU, SUTTER, TEHEMA, TRINITY, TULARE, TUOLUMNE, YOLO, & YUBA COUNTIES

	Rates	Fringes
Asbestos Workers/Insulator (Includes the application of all insulating materials, Protective Coverings, Coatings, and Finishes to all types of mechanical systems)		
Area 1	$ 53.05	17.25
Area 2	$ 41.40	17.25

ASBE0016-004 01/01/2010

	Rates	Fringes
Asbestos Removal worker/hazardous material handler (Includes preparation, wetting, stripping, removal, scrapping, vacuuming, bagging		

and disposing of all
insulation materials from
mechanical systems, whether
they contain asbestos or not)....$ 15.18 2.80

BOIL0549-001 01/01/2009

AREA 1: ALAMEDA, CONTRA COSTA, SAN FRANCISCO, SAN MATEO & SANTA CLARA COUNTIES

AREA 2: REMAINING COUNTIES

	Rates	Fringes
BOILERMAKER		
Area 1	$ 40.17	22.32
Area 2	$ 37.01	22.25

BRCA0003-001 06/01/2011

	Rates	Fringes
MARBLE FINISHER	$ 28.02	12.22

BRCA0003-003 06/01/2011

	Rates	Fringes
MARBLE MASON	$ 39.22	18.68

BRCA0003-005 05/01/2011

	Rates	Fringes
BRICKLAYER		
(1) Fresno, Kings, Madera, Mariposa, Merced	$ 34.11	19.34
(7) San Francisco, San Mateo	$ 39.85	22.00
(8) Alameda, Contra Costa, San Benito, Santa Clara	$ 39.63	19.92
(9) Calaveras, San Joaquin, Stanislaus, Toulumne	$ 35.11	18.99
(16) Monterey, Santa Cruz	$ 35.91	22.42

BRCA0003-008 06/01/2011

	Rates	Fringes
TERRAZZO FINISHER	$ 30.30	13.77
TERRAZZO WORKER/SETTER	$ 39.30	21.20

BRCA0003-011 01/01/2011

AREA 1: Alameda, Contra Costa, Monterey, San Benito, San Francisco, San Mateo, Santa Clara, Santa Cruz

AREA 2: Calaveras, San Joaquin, Stanislaus, Tuolumne

AREA 3: Fresno, Kings, Madera, Mariposa, Merced

	Rates	Fringes
TILE FINISHER		
Area 1	$ 21.44	12.31
Area 2	$ 21.26	12.44
Area 3	$ 21.01	11.58
Tile Layer		
Area 1	$ 38.61	13.73
Area 2	$ 34.41	13.68
Area 3	$ 29.78	13.10

CARP0022-001 07/01/2011

San Francisco County

	Rates	Fringes
Carpenters		
Bridge Builder/Highway Carpenter	$ 37.50	24.84
Hardwood Floorlayer, Shingler, Power Saw Operator, Steel Scaffold & Steel Shoring Erector, Saw Filer	$ 37.65	24.84
Journeyman Carpenter	$ 37.50	24.84
Millwright	$ 37.60	26.43

CARP0034-001 07/01/2011

	Rates	Fringes
Diver		
Assistant Tender, ROV Tender/Technician	$ 36.75	28.04
Diver standby	$ 41.43	28.04
Diver Tender	$ 40.43	28.04
Diver wet	$ 82.86	28.04
Manifold Operator (mixed gas)	$ 45.43	28.04
Manifold Operator (Standby)	$ 40.43	28.04

DEPTH PAY (Surface Diving):
050 to 100 ft $2.00 per foot
101 to 150 ft $3.00 per foot
151 to 220 ft $4.00 per foot

SATURATION DIVING:
The standby rate shall apply until saturation starts. The saturation diving rate applies when divers are under pressure continuously until work task and decompression are complete. The diver rate shall be paid for all saturation hours.

DIVING IN ENCLOSURES:
Where it is necessary for Divers to enter pipes or tunnels, or other enclosures where there is no vertical ascent, the following premium shall be paid: Distance traveled from entrance 26 feet to 300 feet: $1.00 per foot. When it is necessary for a diver to enter any pipe, tunnel or other enclosure less than 48" in height, the premium will be

$1.00 per foot.

WORK IN COMBINATION OF CLASSIFICATIONS:
Employees working in any combination of classifications within the diving crew (except dive supervisor) in a shift are paid in the classification with the highest rate for that shift.

CARP0034-003 07/01/2011

	Rates	Fringes
Piledriver	$ 36.75	28.04

CARP0035-007 07/01/2010

AREA 1: Alameda, Contra Costa, San Francisco, San Mateo, Santa Clara counties

AREA 2: Monterey, San Benito, Santa Cruz Counties

AREA 3: Calaveras, Fresno, Kings, Madera, Mariposa, Merced, San Joaquin, Stanislaus, Tuolumne Counties

	Rates	Fringes
Modular Furniture Installer		
Area 1		
Installer I	$ 22.11	14.98
Installer II	$ 18.68	14.98
Lead Installer	$ 25.56	15.48
Master Installer	$ 29.78	15.48
Area 2		
Installer I	$ 19.46	14.98
Installer II	$ 16.51	14.89
Lead Installer	$ 22.43	15.48
Master Installer	$ 26.06	15.48
Area 3		
Installer I	$ 18.51	14.98
Installer II	$ 15.74	14.98
Lead Installer	$ 21.31	15.48
Master Installer	$ 24.73	15.48

CARP0035-008 08/01/2011

AREA 1: Alameda, Contra Costa, San Francisco, San Mateo, Santa Clara counties

AREA 2: Monterey, San Benito, Santa Cruz Counties

AREA 4: Calaveras, Fresno, Kings, Madera, Mariposa, Merced, San Joaquin, Stanislaus, Tuolumne Counties

	Rates	Fringes
Drywall Installers/Lathers:		
Area 1	$ 37.50	25.28
Area 2	$ 31.62	25.28
Area 4	$ 30.77	25.28
Drywall Stocker/Scrapper		
Area 1	$ 18.75	14.44

Area 2.....$ 15.81 14.44
Area 4.....$ 15.39 14.44

CARP0152-001 07/01/2011

Contra Costa County

	Rates	Fringes
Carpenters		
Bridge Builder/Highway Carpenter	$ 37.50	24.84
Hardwood Floorlayer, Shingler, Power Saw Operator, Steel Scaffold & Steel Shoring Erector, Saw Filer	$ 37.65	24.84
Journeyman Carpenter	$ 37.50	24.84
Millwright	$ 37.60	26.43

CARP0152-002 07/01/2011

San Joaquin County

	Rates	Fringes
Carpenters		
Bridge Builder/Highway Carpenter	$ 37.50	24.84
Hardwood Floorlayer, Shingler, Power Saw Operator, Steel Scaffold & Steel Shoring Erector, Saw Filer	$ 31.77	24.84
Journeyman Carpenter	$ 31.62	24.84
Millwright	$ 33.67	26.43

CARP0152-004 07/01/2011

Calaveras, Mariposa, Merced, Stanislaus and Tuolumne Counties

	Rates	Fringes
Carpenters		
Bridge Builder/Highway Carpenter	$ 37.50	24.84
Hardwood Floorlayer, Shingler, Power Saw Operator, Steel Scaffold & Steel Shoring Erector, Saw Filer	$ 30.42	24.84
Journeyman Carpenter	$ 30.27	24.84
Millwright	$ 32.77	26.43

CARP0217-001 07/01/2011

San Mateo County

	Rates	Fringes
Carpenters		
Bridge Builder/Highway Carpenter	$ 37.50	24.84

Hardwood Floorlayer,
Shingler, Power Saw
Operator, Steel Scaffold &
Steel Shoring Erector, Saw
Filer.....$ 37.65 24.84
Journeyman Carpenter.....$ 37.50 24.84
Millwright.....$ 37.60 26.43

CARP0405-001 07/01/2011

Santa Clara County

	Rates	Fringes
Carpenters		
Bridge Builder/Highway Carpenter	$ 37.50	24.84
Hardwood Floorlayer, Shingler, Power Saw Operator, Steel Scaffold & Steel Shoring Erector, Saw Filer	$ 37.65	24.84
Journeyman Carpenter	$ 37.50	24.84
Millwright	$ 37.60	26.43

CARP0405-002 07/01/2011

San Benito County

	Rates	Fringes
Carpenters		
Bridge Builder/Highway Carpenter	$ 37.50	24.84
Hardwood Floorlayer, Shingler, Power Saw Operator, Steel Scaffold & Steel Shoring Erector, Saw Filer	$ 31.77	24.84
Journeyman Carpenter	$ 31.62	24.84
Millwright	$ 34.12	26.43

CARP0505-001 07/01/2011

Santa Cruz County

	Rates	Fringes
Carpenters		
Bridge Builder/Highway Carpenter	$ 37.50	24.84
Hardwood Floorlayer, Shingler, Power Saw Operator, Steel Scaffold & Steel Shoring Erector, Saw Filer	$ 31.77	24.84
Journeyman Carpenter	$ 31.62	24.84
Millwright	$ 34.12	26.43

CARP0605-001 07/01/2011

Monterey County

	Rates	Fringes
Carpenters		
Bridge Builder/Highway Carpenter	$ 37.50	24.84
Hardwood Floorlayer, Shingler, Power Saw Operator, Steel Scaffold & Steel Shoring Erector, Saw Filer	$ 31.77	24.84
Journeyman Carpenter	$ 31.62	24.84
Millwright	$ 34.12	26.43

CARP0701-001 07/01/2011

Fresno and Madera Counties

	Rates	Fringes
Carpenters		
Bridge Builder/Highway Carpenter	$ 37.50	24.84
Hardwood Floorlayer, Shingler, Power Saw Operator, Steel Scaffold & Steel Shoring Erector, Saw Filer	$ 30.42	24.84
Journeyman Carpenter	$ 30.27	24.84
Millwright	$ 32.77	26.43

CARP0713-001 07/01/2011

Alameda County

	Rates	Fringes
Carpenters		
Bridge Builder/Highway Carpenter	$ 37.50	24.84
Hardwood Floorlayer, Shingler, Power Saw Operator, Steel Scaffold & Steel Shoring Erector, Saw Filer	$ 37.65	24.84
Journeyman Carpenter	$ 37.50	24.84
Millwright	$ 37.60	26.43

CARP1109-001 07/01/2011

Kings County

	Rates	Fringes
Carpenters		
Bridge Builder/Highway Carpenter	$ 37.50	24.84
Hardwood Floorlayer, Shingler, Power Saw Operator, Steel Scaffold & Steel Shoring Erector, Saw Filer	$ 30.42	24.84
Journeyman Carpenter	$ 30.27	24.84
Millwright	$ 32.77	26.43

ELEC0006-001 12/01/2010

ALAMEDA, CONTRA COSTA, MONTEREY, SAN BENITO, SAN FRANCISCO, SAN MATEO, SANTA CLARA, AND SANTA CRUZ COUNTIES

	Rates	Fringes
Sound & Communications		
Installer	$ 29.87	3%+12.95
Technician	$ 34.01	3%+12.95

SCOPE OF WORK: Including any data system whose only function is to transmit or receive information; excluding all other data systems or multiple systems which include control function or power supply; inclusion or exclusion of terminations and testings of conductors determined by their function; excluding fire alarm work when installed in raceways (including wire and cable pulling) and when performed on new or major remodel building projects or jobs for which the conductors for the fire alarm system are installed in conduit; excluding installation of raceway systems, line voltage work, industrial work, life-safety systems (all buildings having floors located more than 75' above the lowest floor level having building access); excluding energy management systems.

FOOTNOTE: Fire alarm work when installed in raceways (including wire and cable pulling), on projects which involve new or major remodel building construction, for which the conductors for the fire alarm system are installed in the conduit, shall be performed by the inside electrician.

ELEC0006-007 12/01/2010

SAN FRANCISCO COUNTY

	Rates	Fringes
ELECTRICIAN	$ 53.05	22.69

ELEC0006-008 12/01/2006

CALAVERAS, MARIPOSA, MERCED, SAN JOAQUIN, STANISLAUS AND TUOLUMNE COUNTIES

	Rates	Fringes
Communications System		
Installer	$ 23.47	3%+10.65
Technician	$ 26.72	3%+10.65

SCOPE OF WORK: Including any data system whose only function is to transmit or receive information; excluding all other data systems or multiple systems which include control function or power supply; inclusion or exclusion of terminations and testings of conductors determined by their function; excluding fire alarm work when installed in raceways (including wire and cable pulling) and when performed on new or major remodel building projects or

jobs for which the conductors for the fire alarm system are installed in conduit; excluding installation of raceway systems, line voltage work, industrial work, life-safety systems (all buildings having floors located more than 75' above the lowest floor level having building access); excluding energy management systems.

FOOTNOTE: Fire alarm work when installed in raceways (including wire and cable pulling), on projects which involve new or major remodel building construction, for which the conductors for the fire alarm system are installed in the conduit, shall be performed by the inside electrician.

ELEC0100-002 06/01/2011

FRESNO, KINGS, AND MADERA COUNTIES

	Rates	Fringes
ELECTRICIAN	$ 32.85	3%+16.30

ELEC0100-005 07/01/2011

FRESNO, KINGS, MADERA

	Rates	Fringes
Communications System		
Installer	$ 26.29	13.74
Technician	$ 29.93	13.85

SCOPE OF WORK

Includes the installation testing, service and maintenance, of the following systems which utilize the transmission and/or transference of voice, sound, vision and digital for commercial, education, security and entertainment purposes for the following: TV monitoring and surveillance, background-foreground music, intercom and telephone interconnect, inventory control systems, microwave transmission, multi-media, multiplex, nurse call system, radio page, school intercom and sound, burglar alarms, and low voltage master clock systems.

A. SOUND AND VOICE TRANSMISSION/TRANSFERENCE SYSTEMS Background foreground music, Intercom and telephone interconnect systems, Telephone systems Nurse call systems, Radio page systems, School intercom and sound systems, Burglar alarm systems, Low voltage, master clock systems, Multi-media/multiplex systems, Sound and musical entertainment systems, RF systems, Antennas and Wave Guide,

B. FIRE ALARM SYSTEMS Installation, wire pulling and testing

C. TELEVISION AND VIDEO SYSTEMS Television monitoring and surveillance systems Video security systems, Video entertainment systems, Video educational systems, Microwave transmission systems, CATV and CCTV

D. SECURITY SYSTEMS Perimeter security systems Vibration sensor systems Card access systems Access control systems, Sonar/infrared monitoring equipment

E. COMMUNICATIONS SYSTEMS THAT TRANSMIT OR RECEIVE INFORMATION AND/OR CONTROL SYSTEMS THAT ARE INTRINSIC TO THE ABOVE LISTED SYSTEMS SCADA (Supervisory Control and Data Acquisition) PCM (Pulse Code Modulation) Inventory Control Systems, Digital Data Systems Broadband and Baseband and Carriers Point of Sale Systems, VSAT Data Systems Data Communication Systems RF and Remote Control Systems, Fiber Optic Data Systems

WORK EXCLUDED Raceway systems are not covered (excluding Ladder-Rack for the purpose of the above listed systems). Chases and/or nipples (not to exceed 10 feet) may be installed on open wiring systems. Energy management systems. SCADA (Supervisory Control and Data Acquisition) when not intrinsic to the above listed systems (in the scope). Fire alarm systems when installed in raceways (including wire and cable pulling) shall be performed at the electrician wage rate, when either of the following two (2) conditions apply:
1. The project involves new or major remodel building trades construction.
2. The conductors for the fire alarm system are installed in conduit.

ELEC0234-001 05/31/2011

MONTEREY, SAN BENITO AND SANTA CRUZ COUNTIES

	Rates	Fringes
ELECTRICIAN	$ 41.20	21.50

---

* ELEC0302-001 06/01/2011

CONTRA COSTA COUNTY

	Rates	Fringes
CABLE SPLICER	$ 50.49	3%+22.95
ELECTRICIAN	$ 44.21	3%+22.95

ELEC0332-001 11/28/2011

SANTA CLARA COUNTY

	Rates	Fringes
CABLE SPLICER	$ 57.01	29.165
ELECTRICIAN	$ 49.57	28.14

FOOTNOTES: Work under compressed air or where gas masks are required, orwork on ladders, scaffolds, stacks, "Bosun's chairs," or other structures and where the workers are not protected by permanent guard rails at a distance of 40 to 60 ft. from the ground or supporting structures: to be paid one and one-half times the straight-time rate of pay.
Work on structures of 60 ft. or over (as described above): to be paid twice the straight-time rate of pay.

ELEC0595-001 06/01/2011

ALAMEDA COUNTY

	Rates	Fringes
CABLE SPLICER	$ 50.63	3%+25.43
ELECTRICIAN	$ 45.00	3%+25.43

ELEC0595-002 12/01/2011

CALAVERAS AND SAN JOAQUIN COUNTIES

	Rates	Fringes
CABLE SPLICER	$ 37.13	9.025%+21.74
ELECTRICIAN		
(1) Tunnel work	$ 34.65	9.025%+21.74
(2) All other work	$ 33.00	9.025%+21.74

ELEC0617-001 06/01/2011

SAN MATEO COUNTY

	Rates	Fringes
ELECTRICIAN	$ 50.00	23.14

---

* ELEC0684-001 01/01/2012

MARIPOSA, MERCED, STANISLAUS AND TUOLUMNE COUNTIES

	Rates	Fringes
ELECTRICIAN	$ 34.60	3%+17.15

CABLE SPLICER = 110% of Journeyman Electrician

ELEC1245-001 06/01/2011

	Rates	Fringes
LINE CONSTRUCTION		
(1) Lineman; Cable splicer	$ 47.87	13.87
(2) Equipment specialist (operates crawler tractors, commercial motor vehicles, backhoes, trenchers, cranes (50 tons and below), overhead & underground distribution line equipment)	$ 38.23	12.80
(3) Groundman	$ 29.25	12.53
(4) Powderman	$ 42.75	12.97

HOLIDAYS: New Year's Day, M.L. King Day, Memorial Day, Independence Day, Labor Day, Veterans Day, Thanksgiving Day and day after Thanksgiving, Christmas Day

---

* ELEV0008-001 01/01/2012

	Rates	Fringes
ELEVATOR MECHANIC	$ 57.29	23.535

FOOTNOTE:
PAID VACATION: Employer contributes 8% of regular hourly

rate as vacation pay credit for employees with more than 5 years of service, and 6% for 6 months to 5 years of service. PAID HOLIDAYS: New Years Day, Memorial Day, Independence Day, Labor Day, Veterans Day, Thanksgiving Day, Friday after Thanksgiving, and Christmas Day.

---

* ENGI0003-008 07/01/2011

	Rates	Fringes
Dredging: (DREDGING: CLAMSHELL & DIPPER DREDGING; HYDRAULIC SUCTION DREDGING:)		
AREA 1:		
(1) Leverman	$ 38.94	25.40
(2) Dredge Dozer; Heavy duty repairman	$ 33.98	25.40
(3) Booster Pump Operator; Deck Engineer; Deck mate; Dredge Tender; Winch Operator	$ 32.86	25.40
(4) Bargeman; Deckhand; Fireman; Leveehand; Oiler	$ 29.56	25.40
AREA 2:		
(1) Leverman	$ 40.94	25.40
(2) Dredge Dozer; Heavy duty repairman	$ 35.98	25.40
(3) Booster Pump Operator; Deck Engineer; Deck mate; Dredge Tender; Winch Operator	$ 34.86	25.40
(4) Bargeman; Deckhand; Fireman; Leveehand; Oiler	$ 31.56	25.40

AREA DESCRIPTIONS

AREA 1: ALAMEDA,BUTTE, CONTRA COSTA, KINGS, MARIN, MERCED, NAPA, SACRAMENTO, SAN BENITO, SAN FRANCISCO, SAN JOAQUIN, SAN MATEO, SANTA CLARA, SANTA CRUZ, SOLANO, STANISLAUS, SUTTER, YOLO, AND YUBA COUNTIES

AREA 2: MODOC COUNTY

THE REMAINGING COUNTIES ARE SPLIT BETWEEN AREA 1 AND AREA 2 AS NOTED BELOW:

ALPINE COUNTY:
Area 1: Northernmost part
Area 2: Remainder

CALAVERAS COUNTY:
Area 1: Remainder
Area 2: Eastern part

COLUSA COUNTY:
Area 1: Eastern part
Area 2: Remainder

ELDORADO COUNTY:
Area 1: North Central part
Area 2: Remainder

FRESNO COUNTY:
Area 1: Remainder
Area 2: Eastern part

GLENN COUNTY:
Area 1: Eastern part
Area 2: Remainder

LASSEN COUNTY:
Area 1: Western part along the Southern portion of border with Shasta County
Area 2: Remainder

MADERA COUNTY:
Area 1: Except Eastern part
Area 2: Eastern part

MARIPOSA COUNTY
Area 1: Except Eastern part
Area 2: Eastern part

MONTERREY COUNTY
Area 1: Except Southwestern part
Area 2: Southwestern part

NEVADA COUNTY:
Area 1: All but the Northern portion along the border of Sierra County
Area 2: Remainder

PLACER COUNTY:
Area 1: Al but the Central portion
Area 2: Remainder

PLUMAS COUNTY:
Area 1: Western portion
Area 2: Remainder

SHASTA COUNTY:
Area 1: All but the Northeastern corner
Area 2: Remainder

SIERRA COUNTY:
Area 1: Western part
Area 2: Remainder

SISKIYOU COUNTY:
Area 1: Central part
Area 2: Remainder

SONOMA COUNTY:
Area 1: All but the Northwestern corner
Area 2: Remainder

TEHAMA COUNTY:
Area 1: All but the Western border with Mendocino & Trinity Counties
Area 2: Remainder

TRINITY COUNTY:
Area 1: East Central part and the Northeastern border with Shasta County

Area 2: Remainder

TUOLUMNE COUNTY:
Area 1: Except Eastern part
Area 2: Eastern part
---
* ENGI0003-018 06/27/2011

"AREA 1" WAGE RATES ARE LISTED BELOW

"AREA 2" RECEIVES AN ADDITIONAL $2.00 PER HOUR ABOVE AREA 1 RATES.

SEE AREA DEFINITIONS BELOW

	Rates	Fringes
OPERATOR: Power Equipment (AREA 1:)		
GROUP 1	$ 37.77	24.00
GROUP 2	$ 36.24	24.00
GROUP 3	$ 34.76	24.00
GROUP 4	$ 33.38	24.00
GROUP 5	$ 32.11	24.00
GROUP 6	$ 30.79	24.00
GROUP 7	$ 29.65	24.00
GROUP 8	$ 28.51	24.00
GROUP 8-A	$ 28.30	24.00
OPERATOR: Power Equipment (Cranes and Attachments - AREA 1:)		
GROUP 1		
Cranes	$ 38.65	24.00
Oiler	$ 29.39	24.00
Truck crane oiler	$ 31.68	24.00
GROUP 2		
Cranes	$ 36.89	24.00
Oiler	$ 29.18	24.00
Truck crane oiler	$ 31.42	24.00
GROUP 3		
Cranes	$ 35.14	24.00
Hydraulic	$ 30.79	24.00
Oiler	$ 28.90	24.00
Truck Crane Oiler	$ 31.18	24.00
OPERATOR: Power Equipment (Piledriving - AREA 1:)		
GROUP 1		
Lifting devices	$ 38.99	24.00
Oiler	$ 29.73	24.00
Truck crane oiler	$ 32.01	24.00
GROUP 2		
Lifting devices	$ 37.17	24.00
Oiler	$ 29.46	24.00
Truck Crane Oiler	$ 31.76	24.00
GROUP 3		
Lifting devices	$ 35.49	24.00
Oiler	$ 29.24	24.00
Truck Crane Oiler	$ 31.47	24.00
GROUP 4	$ 33.72	24.00
GROUP 5	$ 31.08	24.00
GROUP 6	$ 28.85	24.00
OPERATOR: Power Equipment		

(Steel Erection - AREA 1:)

GROUP 1		
Cranes	$ 39.62	24.00
Oiler	$ 30.07	24.00
Truck Crane Oiler	$ 32.30	24.00
GROUP 2		
Cranes	$ 37.85	24.00
Oiler	$ 29.80	24.00
Truck Crane Oiler	$ 32.08	24.00
GROUP 3		
Cranes	$ 36.37	24.00
Hydraulic	$ 31.42	24.00
Oiler	$ 29.58	24.00
Truck Crane Oiler	$ 31.81	24.00
GROUP 4	$ 34.35	24.00
GROUP 5	$ 33.05	24.00

OPERATOR: Power Equipment
(Tunnel and Underground Work
- AREA 1:)

SHAFTS, STOPES, RAISES:		
GROUP 1	$ 33.87	24.00
GROUP 1-A	$ 36.34	24.00
GROUP 2	$ 32.61	24.00
GROUP 3	$ 31.28	24.00
GROUP 4	$ 30.14	24.00
GROUP 5	$ 29.00	24.00
UNDERGROUND:		
GROUP 1	$ 33.77	24.00
GROUP 1-A	$ 36.34	24.00
GROUP 2	$ 32.51	24.00
GROUP 3	$ 31.18	24.00
GROUP 4	$ 30.04	24.00
GROUP 5	$ 28.90	24.00

FOOTNOTE: Work suspended by ropes or cables, or work on a Yo-Yo Cat: $.60 per hour additional.

POWER EQUIPMENT OPERATOR CLASSIFICATIONS

GROUP 1: Operator of helicopter (when used in erection work); Hydraulic excavator, 7 cu. yds. and over; Power shovels, over 7 cu. yds.

GROUP 2: Highline cableway; Hydraulic excavator, 3-1/2 cu. yds. up to 7 cu. yds.; Licensed construction work boat operator, on site; Power blade operator (finish); Power shovels, over 1 cu. yd. up to and including 7 cu. yds. m.r.c.

GROUP 3: Asphalt milling machine; Cable backhoe; Combination backhoe and loader over 3/4 cu. yds.; Continuous flight tie back machine assistant to engineer or mechanic; Crane mounted continuous flight tie back machine, tonnage to apply; Crane mounted drill attachment, tonnage to apply; Dozer, slope brd; Gradall; Hydraulic excavator, up to 3 1/2 cu. yds.; Loader 4 cu. yds. and over; Long reach excavator; Multiple engine scraper (when used as push pull); Power shovels, up to and including 1 cu. yd.; Pre-stress wire wrapping machine; Side boom cat, 572 or larger; Track loader 4 cu. yds. and over; Wheel excavator (up to and including 750 cu. yds. per hour)

GROUP 4: Asphalt plant engineer/box person; Chicago boom; Combination backhoe and loader up to and including 3/4 cu. yd.; Concrete batch plant (wet or dry); Dozer and/or push cat; Pull- type elevating loader; Gradesetter, grade checker (GPS, mechanical or otherwise); Grooving and grinding machine; Heading shield operator; Heavy-duty drilling equipment, Hughes, LDH, Watson 3000 or similar; Heavy-duty repairperson and/or welder; Lime spreader; Loader under 4 cu. yds.; Lubrication and service engineer (mobile and grease rack); Mechanical finishers or spreader machine (asphalt, Barber-Greene and similar); Miller Formless M-9000 slope paver or similar; Portable crushing and screening plants; Power blade support; Roller operator, asphalt; Rubber-tired scraper, self-loading (paddle-wheels, etc.); Rubber- tired earthmoving equipment (scrapers); Slip form paver (concrete); Small tractor with drag; Soil stabilizer (P & H or equal); Spider plow and spider puller; Tubex pile rig; Unlicensed constuction work boat operator, on site; Timber skidder; Track loader up to 4 yds.; Tractor-drawn scraper; Tractor, compressor drill combination; Welder; Woods-Mixer (and other similar Pugmill equipment)

GROUP 5: Cast-in-place pipe laying machine; Combination slusher and motor operator; Concrete conveyor or concrete pump, truck or equipment mounted; Concrete conveyor, building site; Concrete pump or pumpcrete gun; Drilling equipment, Watson 2000, Texoma 700 or similar; Drilling and boring machinery, horizontal (not to apply to waterliners, wagon drills or jackhammers); Concrete mixer/all; Person and/or material hoist; Mechanical finishers (concrete) (Clary, Johnson, Bidwell Bridge Deck or similar types); Mechanical burm, curb and/or curb and gutter machine, concrete or asphalt); Mine or shaft hoist; Portable crusher; Power jumbo operator (setting slip-forms, etc., in tunnels); Screed (automatic or manual); Self-propelled compactor with dozer; Tractor with boom D6 or smaller; Trenching machine, maximum digging capacity over 5 ft. depth; Vermeer T-600B rock cutter or similar

GROUP 6: Armor-Coater (or similar); Ballast jack tamper; Boom- type backfilling machine; Assistant plant engineer; Bridge and/or gantry crane; Chemical grouting machine, truck-mounted; Chip spreading machine operator; Concrete saw (self-propelled unit on streets, highways, airports and canals); Deck engineer; Drilling equipment Texoma 600, Hughes 200 Series or similar up to and including 30 ft. m.r.c.; Drill doctor; Helicopter radio operator; Hydro-hammer or similar; Line master; Skidsteer loader, Bobcat larger than 743 series or similar (with attachments); Locomotive; Lull hi-lift or similar; Oiler, truck mounted equipment; Pavement breaker, truck-mounted, with compressor combination; Paving fabric installation and/or laying machine; Pipe bending machine (pipelines only); Pipe wrapping machine (tractor propelled and supported); Screed (except asphaltic concrete paving); Self- propelled pipeline wrapping machine; Soils & materials tester; Tractor; Self-loading chipper; Concrete barrier moving machine

GROUP 7: Ballast regulator; Boom truck or dual-purpose A-frame truck, non-rotating - under 15 tons; Truck-mounted rotating telescopic boom type lifting device, Manitex or

similar (boom truck) - under 15 tons; Cary lift or similar; Combination slurry mixer and/or cleaner; Drilling equipment, 20 ft. and under m.r.c.; Firetender (hot plant); Grouting machine operator; Highline cableway signalperson; Stationary belt loader (Kolman or similar); Lift slab machine (Vagtborg and similar types); Maginnes internal full slab vibrator; Material hoist (1 drum); Mechanical trench shield; Pavement breaker with or without compressor combination); Pipe cleaning machine (tractor propelled and supported); Post driver; Roller (except asphalt); Chip Seal; Self-propelled automatically applied concrete curing mahcine (on streets, highways, airports and canals); Self-propelled compactor (without dozer); Signalperson; Slip-form pumps (lifting device for concrete forms); Tie spacer; Tower mobile; Trenching machine, maximum digging capacity up to and including 5 ft. depth; Truck- type loader

GROUP 8: Bit sharpener; Boiler tender; Box operator; Brakeperson; Combination mixer and compressor (shotcrete/gunite); Compressor operator; Deckhand; Fire tender; Forklift (under 20 ft.); Generator; Gunite/shotcrete equipment operator; Hydraulic monitor; Ken seal machine (or similar); Mixermobile; Oiler; Pump operator; Refrigeration plant; Reservoir-debris tug (self-propelled floating); Ross Carrier (construction site); Rotomist operator; Self-propelled tape machine; Shuttlecar; Self-propelled power sweeper operator (includes vacuum sweeper); Slusher operator; Surface heater; Switchperson; Tar pot firetender; Tugger hoist, single drum; Vacuum cooling plant; Welding machine (powered other than by electricity)

GROUP 8-A: Elevator operator; Skidsteer loader-Bobcat 743 series or smaller, and similar (without attachments); Mini excavator under 25 H.P. (backhoe-trencher); Tub grinder wood chipper

---

ALL CRANES AND ATTACHMENTS

GROUP 1: Clamshell and dragline over 7 cu. yds.; Crane, over 100 tons; Derrick, over 100 tons; Derrick barge pedestal-mounted, over 100 tons; Self-propelled boom-type lifting device, over 100 tons

GROUP 2: Clamshell and dragline over 1 cu. yd. up to and including 7 cu. yds.; Crane, over 45 tons up to and including 100 tons; Derrick barge, 100 tons and under; Self-propelled boom-type lifting device, over 45 tons; Tower crane

GROUP 3: Clamshell and dragline up to and including 1 cu. yd.; Cranes 45 tons and under; Self-propelled boom-type lifting device 45 tons and under; Boom Truck or dual purpose A-frame truck, non-rotating over 15 tons; Truck-mounted rotating telescopic boom type lifting device, Manitex or similar (boom truck) over 15 tons;

PILEDRIVERS

GROUP 1: Derrick barge pedestal mounted over 100 tons; Clamshell over 7 cu. yds.; Self-propelled boom-type lifting device over 100 tons; Truck crane or crawler, land or barge mounted over 100 tons

GROUP 2: Derrick barge pedestal mounted 45 tons to and including 100 tons; Clamshell up to and including 7 cu. yds.; Self-propelled boom-type lifting device over 45 tons; Truck crane or crawler, land or barge mounted, over 45 tons up to and including 100 tons; Fundex F-12 hydraulic pile rig

GROUP 3: Derrick barge pedestal mounted under 45 tons; Self-propelled boom-type lifting device 45 tons and under; Skid/scow piledriver, any tonnage; Truck crane or crawler, land or barge mounted 45 tons and under

GROUP 4: Assistant operator in lieu of assistant to engineer; Forklift, 10 tons and over; Heavy-duty repairperson/welder

GROUP 5: Deck engineer

GROUP 6: Deckhand; Fire tender

STEEL ERECTORS

GROUP 1: Crane over 100 tons; Derrick over 100 tons; Self-propelled boom-type lifting device over 100 tons

GROUP 2: Crane over 45 tons to 100 tons; Derrick under 100 tons; Self-propelled boom-type lifting device over 45 tons to 100 tons; Tower crane

GROUP 3: Crane, 45 tons and under; Self-propelled boom-type lifting device, 45 tons and under

GROUP 4: Chicago boom; Forklift, 10 tons and over; Heavy-duty repair person/welder

GROUP 5: Boom cat

TUNNEL AND UNDERGROUND WORK

GROUP 1-A: Tunnel bore machine operator, 20' diameter or more

GROUP 1: Heading shield operator; Heavy-duty repairperson; Mucking machine (rubber tired, rail or track type); Raised bore operator (tunnels); Tunnel mole bore operator

GROUP 2: Combination slusher and motor operator; Concrete pump or pumpcrete gun; Power jumbo operator

GROUP 3: Drill doctor; Mine or shaft hoist

GROUP 4: Combination slurry mixer cleaner; Grouting Machine operator; Motorman

GROUP 5: Bit Sharpener; Brakeman; Combination mixer and

compressor (gunite); Compressor operator; Oiler; Pump operator; Slusher operator

---

AREA DESCRIPTIONS:

POWER EQUIPMENT OPERATORS, CRANES AND ATTACHMENTS,TUNNEL AND UNDERGROUND [These areas do not apply to Piledrivers and Steel Erectors]

AREA 1: ALAMEDA, BUTTE, CONTRA COSTA, KINGS, MARIN, MERCED, NAPA, SACRAMENTO, SAN BENITO, SAN FRANCISCO, SAN JOAQUIN, SAN MATEO, SANTA CLARA, SANTA CRUZ, SOLANO, STANISLAUS, SUTTER, YOLO, AND YUBA COUNTIES

AREA 2 - MODOC COUNTY

THE REMAINING COUNTIES ARE SPLIT BETWEEN AREA 1 AND AREA 2 AS NOTED BELOW:

ALPINE COUNTY:
Area 1: Northernmost part
Area 2: Remainder

CALAVERAS COUNTY:
Area 1: Except Eastern part
Area 2: Eastern part

COLUSA COUNTY:
Area 1: Eastern part
Area 2: Remainder

DEL NORTE COUNTY:
Area 1: Extreme Southwestern corner
Area 2: Remainder

ELDORADO COUNTY:
Area 1: North Central part
Area 2: Remainder

FRESNO COUNTY
Area 1: Except Eastern part
Area 2: Eastern part

GLENN COUNTY:
Area 1: Eastern part
Area 2: Remainder

HUMBOLDT COUNTY:
Area 1: Except Eastern and Southwestern parts
Area 2: Remainder

LAKE COUNTY:
Area 1: Southern part
Area 2: Remainder

LASSEN COUNTY:
Area 1: Western part along the Southern portion of border with Shasta County
Area 2: Remainder

MADERA COUNTY
Area 1: Remainder

Area 2: Eastern part

MARIPOSA COUNTY
Area 1: Remainder
Area 2: Eastern part

MENDOCINO COUNTY:
Area 1: Central and Southeastern parts
Area 2: Remainder

MONTEREY COUNTY
Area 1: Remainder
Area 2: Southwestern part

NEVADA COUNTY:
Area 1: All but the Northern portion along the border of Sierra County
Area 2: Remainder

PLACER COUNTY:
Area 1: All but the Central portion
Area 2: Remainder

PLUMAS COUNTY:
Area 1: Western portion
Area 2: Remainder

SHASTA COUNTY:
Area 1: All but the Northeastern corner
Area 2: Remainder

SIERRA COUNTY:
Area 1: Western part
Area 2: Remainder

SISKIYOU COUNTY:
Area 1: Central part
Area 2: Remainder

SONOMA COUNTY:
Area 1: All but the Northwestern corner
Area 2: Reaminder

TEHAMA COUNTY:
Area 1: All but the Western border with mendocino & Trinity Counties
Area 2: Remainder

TRINITY COUNTY:
Area 1: East Central part and the Northeaster border with Shasta County
Area 2: Remainder

TULARE COUNTY;
Area 1: Remainder
Area 2: Eastern part

TUOLUMNE COUNTY:
Area 1: Remainder
Area 2: Eastern Part

SEE AREA DESCRIPTIONS BELOW

	Rates	Fringes
OPERATOR: Power Equipment (LANDSCAPE WORK ONLY)		
GROUP 1		
AREA 1	$ 28.64	19.96
AREA 2	$ 30.64	19.96
GROUP 2		
AREA 1	$ 25.04	19.96
AREA 2	$ 27.04	19.96
GROUP 3		
AREA 1	$ 20.43	19.96
AREA 2	$ 22.43	19.96

GROUP DESCRIPTIONS:

GROUP 1: Landscape Finish Grade Operator: All finish grade work regardless of equipment used, and all equipment with a rating more than 65 HP.

GROUP 2: Landscape Operator up to 65 HP: All equipment with a manufacturer's rating of 65 HP or less except equipment covered by Group 1 or Group 3. The following equipment shall be included except when used for finish work as long as manufacturer's rating is 65 HP or less: A-Frame and Winch Truck, Backhoe, Forklift, Hydragraphic Seeder Machine, Roller, Rubber-Tired and Track Earthmoving Equipment, Skiploader, Straw Blowers, and Trencher 31 HP up to 65 HP.

GROUP 3: Landscae Utility Operator: Small Rubber-Tired Tractor, Trencher Under 31 HP.

AREA DESCRIPTIONS:

AREA 1: ALAMEDA, BUTTE, CONTRA COSTA, KINGS, MARIN, MERCED, NAPA, SACRAMENTO, SAN BENITO, SAN FRANCISCO, SAN JOAQUIN, SAN MATEO, SANTA CLARA, SANTA CRUZ, SOLANO, STANISLAUS, SUTTER, YOLO, AND YUBA COUNTIES

AREA 2 - MODOC COUNTY

THE REMAINING COUNTIES ARE SPLIT BETWEEN AREA 1 AND AREA 2 AS NOTED BELOW:

ALPINE COUNTY:
Area 1: Northernmost part
Area 2: Remainder

CALAVERAS COUNTY:
Area 1: Except Eastern part
Area 2: Eastern part

COLUSA COUNTY:
Area 1: Eastern part
Area 2: Remainder

DEL NORTE COUNTY:
Area 1: Extreme Southwestern corner
Area 2: Remainder

ELDORADO COUNTY:
Area 1: North Central part
Area 2: Remainder

FRESNO COUNTY
Area 1: Except Eastern part
Area 2: Eastern part

GLENN COUNTY:
Area 1: Eastern part
Area 2: Remainder

HUMBOLDT COUNTY:
Area 1: Except Eastern and Southwestern parts
Area 2: Remainder

LAKE COUNTY:
Area 1: Southern part
Area 2: Remainder

LASSEN COUNTY:
Area 1: Western part along the Southern portion of border with Shasta County
Area 2: Remainder

MADERA COUNTY
Area 1: Remainder
Area 2: Eastern part

MARIPOSA COUNTY
Area 1: Remainder
Area 2: Eastern part

MENDOCINO COUNTY:
Area 1: Central and Southeastern parts
Area 2: Remainder

MONTEREY COUNTY
Area 1: Remainder
Area 2: Southwestern part

NEVADA COUNTY:
Area 1: All but the Northern portion along the border of Sierra County
Area 2: Remainder

PLACER COUNTY:
Area 1: All but the Central portion
Area 2: Remainder

PLUMAS COUNTY:
Area 1: Western portion
Area 2: Remainder

SHASTA COUNTY:
Area 1: All but the Northeastern corner
Area 2: Remainder

SIERRA COUNTY:
Area 1: Western part
Area 2: Remainder

SISKIYOU COUNTY:

Area 1: Central part
Area 2: Remainder

SONOMA COUNTY:
Area 1: All but the Northwestern corner
Area 2: Reaminder

TEHAMA COUNTY:
Area 1: All but the Western border with mendocino & Trinity Counties
Area 2: Remainder

TRINITY COUNTY:
Area 1: East Central part and the Northeaster border with Shasta County
Area 2: Remainder

TULARE COUNTY;
Area 1: Remainder
Area 2: Eastern part

TUOLUMNE COUNTY:
Area 1: Remainder
Area 2: Eastern Part

---

* IRON0002-004 07/01/2011

	Rates	Fringes
Ironworkers:		
Fence Erector	$ 26.58	15.76
Ornamental, Reinforcing and Structural	$ 33.00	24.40

PREMIUM PAY:

$6.00 additional per hour at the following locations:

China Lake Naval Test Station, Chocolate Mountains Naval Reserve-Niland,
Edwards AFB, Fort Irwin Military Station, Fort Irwin Training Center-Goldstone, San Clemente Island, San Nicholas Island, Susanville Federal Prison, 29 Palms - Marine Corps, U.S. Marine Base - Barstow, U.S. Naval Air Facility - Sealey, Vandenberg AFB

$4.00 additional per hour at the following locations:

Army Defense Language Institute - Monterey, Fallon Air Base, Naval Post Graduate School - Monterey, Yermo Marine Corps Logistics Center

$2.00 additional per hour at the following locations:

Port Hueneme, Port Mugu, U.S. Coast Guard Station - Two Rock

LABO0036-001 07/01/2007

SAN FRANCISCO AND SAN MATEO COUNTIES:

	Rates	Fringes
MASON TENDER, BRICK	$ 26.93	16.50

FOOTNOTES: Underground work such as sewers, manholes, catch basins, sewer pipes, telephone conduits, tunnels and cut trenches: $5.00 per day additional. Work in live sewage: $2.50 per day additional.

LABO0036-002 07/01/2007

SAN FRANCISCO AND SAN MATEO COUNTIES:

	Rates	Fringes
PLASTER TENDER	$ 26.48	16.23

FOOTNOTES: Work on a suspended scaffold: $5.00 per day additional. Work operating a plaster mixer pump gun: $1.00 per hour additional.

---

* LABO0067-002 12/01/2011

AREA "A" - ALAMEDA, CONTRA COSTA, MARIN, SAN FRANCISCO, SAN MATEO AND SANTA CLARA COUNTIES

AREA "B" - ALPINE, AMADOR, BUTTE, CALAVERAS, COLUSA, DEL NORTE, EL DORADO, FRESNO, GLENN, HUMBOLDT, KINGS, LAKE, LASSEN, MADERA, MARIPOSA, MENDOCINO, MERCED, MODOC, MONTEREY, NAPA, NEVADA, PLACER, PLUMAS, SACRAMENTO, SAN BENITO, SAN JOAQUIN, SANTA CRUZ, SHASTA, SIERRA, SISKIYOU, SOLANO, SONOMA, STANISLAUS, SUTTER, TEHAMA, TRINITY, TULARE, TUOLUMNE, YOLO AND YUBA COUNTIES

	Rates	Fringes
Asbestos Removal Laborer		
Areas A & B	$ 18.68	8.15
LABORER (Lead Removal)		
Area A	$ 36.25	7.79
Area B	$ 35.25	7.79

ASBESTOS REMOVAL-SCOPE OF WORK: Site mobilization; initial site clean-up; site preparation; removal of asbestos-containing materials from walls and ceilings; or from pipes, boilers and mechanical systems only if they are being scrapped; encapsulation, enclosure and disposal of asbestos-containing materials by hand or with equipment or machinery; scaffolding; fabrication of temporary wooden barriers; and assembly of decontamination stations.

LABO0067-003 07/01/2009

AREA A: ALAMEDA, CONTRA COSTA, MARIN, SAN FRANCISCO, SAN MATEO & SANTA CLARA

AREA B: ALPINE, AMADOR, BUTTE, CALAVERAS, COLUSA, DEL NORTE, EL DORADO, FRESNO, GLENN, HUMBOLDT, KINGS, LAKE, LASSEN, MADERA, MARIPOSA, MENOCINO, MERCED, MODOC, MONTEREY, NAPA, NEVADA, PLACER, PLUMAS, SANCRMENTO, SAN BENITO, SAN JOAQUIN, SANTA CRUZ, SIERRA, SHASTA, SISKIYOU, SOLANO, SONOMA, STANISLAUS,TEHAMA,TRINITY, TULARE, TUOLUMNE, YOLO & YUBA COUNTIES

	Rates	Fringes
LABORER (TRAFFIC CONTROL/LANE CLOSURE)		
Escort Driver, Flag Person		
Area A	$ 26.89	14.93
Area B	$ 25.89	14.93
Traffic Control Person I		
Area A	$ 27.19	14.93
Area B	$ 26.19	14.93
Traffic Control Person II		
Area A	$ 24.69	14.93
Area B	$ 23.69	14.93

TRAFFIC CONTROL PERSON I: Layout of traffic control, crash cushions, construction area and roadside signage.

TRAFFIC CONTROL PERSON II: Installation and removal of temporary/permanent signs, markers, delineators and crash cushions.

LABO0067-006 06/28/2010

AREA "A" - ALAMEDA, CONTRA COSTA, MARIN, SAN FRANCISCO, SAN MATEO AND SANTA CLARA COUNTIES

AREA "B" - ALPINE, AMADOR, BUTTE, CALAVERAS, COLUSA, EL DORADO, FRESNO, GLENN, KINGS, LASSEN, MADERA, MARIPOSA, MERCED, MODOC, MONTEREY, NAPA, NEVADA, PLACER, PLUMAS, SACRAMENTO, SAN BENITO, SAN JOAQUIN, SANTA CRUZ, SHASTA, SIERRA, SISKIYOU, SOLANO, SONOMA, STANISLAUS, SUTTER, TEHAMA, TRINITY, TULARE, TUOLUMNE, YOLO AND YUBA COUNTIES

	Rates	Fringes
Laborers: (CONSTRUCTION CRAFT LABORERS - AREA A:)		
Construction Specialist Group	$ 27.84	15.82
GROUP 1	$ 27.14	15.82
GROUP 1-a	$ 27.36	15.82
GROUP 1-c	$ 27.19	15.82
GROUP 1-e	$ 27.69	15.82
GROUP 1-f	$ 27.72	15.82
GROUP 1-g (Contra Costa County)	$ 27.34	15.82
GROUP 2	$ 26.99	15.82
GROUP 3	$ 26.89	15.82
GROUP 4	$ 20.58	15.82

See groups 1-b and 1-d under laborer classifications.

Laborers: (CONSTRUCTION CRAFT LABORERS - AREA B:)		
Construction Specialist Group	$ 26.84	15.82
GROUP 1	$ 26.14	15.82
GROUP 1-a	$ 26.36	15.82
GROUP 1-c	$ 26.19	15.82
GROUP 1-e	$ 26.69	15.82
GROUP 1-f	$ 26.72	15.82
GROUP 2	$ 25.99	15.82
GROUP 3	$ 25.89	15.82
GROUP 4	$ 19.58	15.82

See groups 1-b and 1-d under laborer classifications.

Laborers: (GUNITE - AREA A:)		
GROUP 1	$ 28.10	15.82
GROUP 2	$ 27.60	15.82
GROUP 3	$ 27.60	15.82
GROUP 4	$ 27.60	15.82
Laborers: (GUNITE - AREA B:)		
GROUP 1	$ 27.10	15.82
GROUP 2	$ 26.60	15.82
GROUP 3	$ 26.01	15.82
GROUP 4	$ 25.89	15.82
Laborers: (WRECKING - AREA A:)		
GROUP 1	$ 27.14	15.82
GROUP 2	$ 26.99	15.82
Laborers: (WRECKING - AREA B:)		
GROUP 1	$ 26.14	15.82
GROUP 2	$ 25.99	15.82
Landscape Laborer (GARDENERS, HORTICULTURAL & LANDSCAPE LABORERS - AREA A:)		
(1) New Construction	$ 26.89	15.82
(2) Establishment Warranty Period	$ 20.58	15.82
Landscape Laborer (GARDENERS, HORTICULURAL & LANDSCAPE LABORERS - AREA B:)		
(1) New Construction	$ 25.89	15.82
(2) Establishment Warranty Period	$ 19.58	15.82

FOOTNOTES:

Laborers working off or with or from bos'n chairs, swinging scaffolds, belts shall receive $0.25 per hour above the applicable wage rate. This shall not apply to workers entitled to receive the wage rate set forth in Group 1-a below.

LABORER CLASSIFICATIONS

CONSTRUCTION SPECIALIST GROUP: Asphalt ironer and raker; Chainsaw; Laser beam in connection with laborers' work; Cast-in- place manhole form setter; Pressure pipelayer; Davis trencher - 300 or similar type (and all small trenchers); Blaster; Diamond driller; Multiple unit drill; Hydraulic drill

GROUP 1: Asphalt spreader boxes (all types); Barko, Wacker and similar type tampers; Buggymobile; Caulker, bander, pipewrapper, conduit layer, plastic pipelayer; Certified hazardous waste worker including Leade Abatement; Compactors of all types; Concrete and magnesite mixer, 1/2 yd. and under; Concrete pan work; Concrete sander; Concrete saw; Cribber and/or shoring; Cut granite curb setter; Dri-pak-it machine; Faller, logloader and bucker; Form raiser, slip forms; Green cutter; Headerboard, Hubsetter, aligner, by any method; High pressure blow pipe (1-1/2" or over, 100 lbs. pressure/over); Hydro seeder and similar type; Jackhammer operator; Jacking of pipe over 12 inches; Jackson and similar type compactor; Kettle tender, pot and worker applying asphalt, lay-kold, creosote, lime, caustic

and similar type materials (applying means applying, dipping or handling of such materials); Lagging, sheeting, whaling, bracing, trenchjacking, lagging hammer; Magnesite, epoxyresin, fiberglass, mastic worker (wet or dry); No joint pipe and stripping of same, including repair of voids; Pavement breaker and spader, including tool grinder; Perma curb; Pipelayer (including grade checking in connection with pipelaying); Precast-manhole setter; Pressure pipe tester; Post hole digger, air, gas and electric; Power broom sweeper; Power tampers of all types (except as shown in Group 2); Ram set gun and stud gun; Riprap stonepaver and rock-slinger, including placing of sacked concrete and/or sand (wet or dry) and gabions and similar type; Rotary scarifier or multiple head concrete chipping scarifier; Roto and Ditch Witch; Rototiller; Sandblaster, pot, gun, nozzle operators; Signalling and rigging; Tank cleaner; Tree climber; Turbo blaster; Vibrascreed, bull float in connection with laborers' work; Vibrator; Hazardous waste worker (lead removal); Asbestos and mold removal worker

GROUP 1-a: Joy drill model TWM-2A; Gardner-Denver model DH143 and similar type drills; Track driller; Jack leg driller; Wagon driller; Mechanical drillers, all types regardless of type or method of power; Mechanical pipe layers, all types regardless of type or method of power; Blaster and powder; All work of loading, placing and blasting of all powder and explosives of whatever type regardless of method used for such loading and placing; High scalers (including drilling of same); Tree topper; Bit grinder

GROUP 1-b: Sewer cleaners shall receive $4.00 per day above Group 1 wage rates. "Sewer cleaner" means any worker who handles or comes in contact with raw sewage in small diameter sewers. Those who work inside recently active, large diameter sewers, and all recently active sewer manholes shal receive $5.00 per day above Group 1 wage rates.

GROUP 1-c: Burning and welding in connection with laborers' work; Synthetic thermoplastics and similar type welding

GROUP 1-d: Maintenance and repair track and road beds. All employees performing work covered herein shall receive $ .25 per hour above their regular rate for all work performed on underground structures not specifically covered herein. This paragraph shall not be construed to apply to work below ground level in open cut. It shall apply to cut and cover work of subway construction after the temporary cover has been placed.

GROUP 1-e: Work on and/or in bell hole footings and shafts thereof, and work on and in deep footings. (A deep footing is a hole 15 feet or more in depth.) In the event the depth of the footing is unknown at the commencement of excavation, and the final depth exceeds 15 feet, the deep footing wage rate would apply to all employees for each and every day worked on or in the excavation of the footing from the date of inception.

GROUP 1-f: Wire winding machine in connection with guniting or shot crete

GROUP 1-g, CONTRA COSTA COUNTY: Pipelayer (including grade checking in connection with pipelaying); Caulker; Bander; Pipewrapper; Conduit layer; Plastic pipe layer; Pressure pipe tester; No joint pipe and stripping of same, including repair of voids; Precast manhole setters, cast in place manhole form setters

GROUP 2: Asphalt shoveler; Cement dumper and handling dry cement or gypsum; Choke-setter and rigger (clearing work); Concrete bucket dumper and chute; Concrete chipping and grinding; Concrete laborer (wet or dry); Driller tender, chuck tender, nipper; Guinea chaser (stake), grout crew; High pressure nozzle, adductor; Hydraulic monitor (over 100 lbs. pressure); Loading and unloading, carrying and hauling of all rods and materials for use in reinforcing concrete construction; Pittsburgh chipper and similar type brush shredders; Sloper; Single foot, hand-held, pneumatic tamper; All pneumatic, air, gas and electric tools not listed in Groups 1 through 1-f; Jacking of pipe - under 12 inches

GROUP 3: Construction laborers, including bridge and general laborer; Dump, load spotter; Flag person; Fire watcher; Fence erector; Guardrail erector; Gardener, horticultural and landscape laborer; Jetting; Limber, brush loader and piler; Pavement marker (button setter); Maintenance, repair track and road beds; Streetcar and railroad construction track laborer; Temporary air and water lines, Victaulic or similar; Tool room attendant (jobsite only)

GROUP 4: Final clean-up work of debris, grounds and building including but not limited to: street cleaner; cleaning and washing windows; brick cleaner (jobsite only); material cleaner (jobsite only). The classification "material cleaner" is to be utilized under the following conditions:
A: at demolition site for the salvage of the material.
B: at the conclusion of a job where the material is to be salvaged and stocked to be reused on another job.
C: for the cleaning of salvage material at the jobsite or temporary jobsite yard.

The material cleaner classification should not be used in the performance of "form stripping, cleaning and oiling and moving to the next point of erection".

GUNITE LABORER CLASSIFICATIONS

GROUP 1: Structural Nozzleman

GROUP 2: Nozzleman, Gunman, Potman, Groundman

GROUP 3: Reboundman

GROUP 4: Gunite laborer

WRECKING WORK LABORER CLASSIFICATIONS

GROUP 1: Skilled wrecker (removing and salvaging of sash, windows and materials)

GROUP 2: Semi-skilled wrecker (salvaging of other building materials)

LABO0067-010 07/01/2010

	Rates	Fringes
Tunnel and Shaft Laborers:		
GROUP 1	$ 33.35	16.08
GROUP 2	$ 33.12	16.08
GROUP 3	$ 32.87	16.08
GROUP 4	$ 32.42	16.08
GROUP 5	$ 31.88	16.08
Shotcrete Specialist	$ 33.87	16.08

TUNNEL AND SHAFT CLASSIFICATIONS

GROUP 1: Diamond driller; Groundmen; Gunite and shotcrete nozzlemen

GROUP 2: Rodmen; Shaft work & raise (below actual or excavated ground level)

GROUP 3: Bit grinder; Blaster, driller, powdermen, heading; Cherry pickermen - where car is lifted; Concrete finisher in tunnel; Concrete screedman; Grout pumpman and potman; Gunite & shotcrete gunman & potman; Headermen; High pressure nozzleman; Miner - tunnel, including top and bottom man on shaft and raise work; Nipper; Nozzleman on slick line; Sandblaster - potman, Robotic Shotcrete Placer, Segment Erector, Tunnel Muck Hauler, Steel Form raiser and setter; Timberman, retimberman (wood or steel or substitute materials therefore); Tugger (for tunnel laborer work); Cable tender; Chuck tender; Powderman - primer house

GROUP 4: Vibrator operator, pavement breaker; Bull gang - muckers, trackmen; Concrete crew - includes rodding and spreading, Dumpmen (any method)

GROUP 5: Grout crew; Reboundman; Swamper/ Brakeman

LABO0073-003 07/01/2009

CALAVERAS, MARIPOSA, MERCED, MONTEREY, SAN BENITO, SAN JOAQUIN, STANISLAUS AND TUOLUMNE COUNTIES:

	Rates	Fringes
LABORER		
Mason Tender-Brick	$ 27.03	14.93

LABO0073-005 07/01/2009

CALAVERAS, FRESNO, KINGS, MADERA, MARIPOSA, MERCED, SAN JOAQUIN, STANISLAUS & TUOLUMNE

	Rates	Fringes
Plasterer tender	$ 28.37	14.14

LABO0166-001 07/01/2006

ALAMEDA AND CONTRA COSTA COUNTIES:

	Rates	Fringes
Brick Tender	$ 25.91	14.65

FOOTNOTES: Work on jobs where heat-protective clothing is required: $2.00 per hour additional. Work at grinders: $.25 per hour additional. Manhole work: $2.00 per day additional.

LABO0166-002 07/01/2006

ALAMEDA AND CONTRA COSTA COUNTIES:

	Rates	Fringes
Plasterer tender	$ 30.15	15.90

Gun Man $0.75 per hour additional

LABO0270-001 07/01/2008

SANTA CLARA & SANTA CRUZ COUNTIES

	Rates	Fringes
MASON TENDER, BRICK		
Santa Clara	$ 27.93	13.48
Santa Cruz	$ 26.93	13.48

FOOTNOTE: $2.00 per hour for refactory work where heat-protective clothing is required.

LABO0270-005 07/01/2007

SANTA CLARA AND SANTA CRUZ COUNTIES

	Rates	Fringes
PLASTER TENDER		
4 Stories and under	$ 27.62	13.73
5 Stories and above	$ 29.54	13.73

LABO0294-001 07/01/2009

FRESNO, KINGS AND MADERA COUNTIES

	Rates	Fringes
LABORER (Brick)		
Mason Tender-Brick	$ 27.03	14.93

LABO0297-001 08/01/2007

MONTEREY AND SAN BENITO COUNTIES

	Rates	Fringes
Plasterer tender	$ 23.70	11.50

FOOTNOTE: Mixer person: $4.00 per day additional.

---

* PAIN0016-001 01/01/2012

ALAMEDA, CONTRA COSTA, MONTEREY, SAN BENITO, SAN MATEO, SANTA CLARA, AND SANTA CRUZ COUNTIES

	Rates	Fringes
Painters:.....	$ 33.09	19.83

PREMIUMS:

EXOTIC MATERIALS - $0.75 additional per hour.
SPRAY WORK: - $0.50 additional per hour.
INDUSTRIAL PAINTING - $0.25 additional per hour
[Work on industrial buildings used for the manufacture and processing of goods for sale or service; steel construction (bridges), stacks, towers, tanks, and similar structures]

HIGH WORK:
over 50 feet - $2.00 per hour additional
100 to 180 feet - $4.00 per hour additional
Over 180 feet - $6.00 per houir additional

---

* PAIN0016-003 01/01/2012

AREA 1: ALAMEDA, CONTRA COSTA, SAN FRANCISCO, SAN MATEO & SANTA CLARA COUNTIES

AREA 2: CALAVERAS, MARIPOA, MERCED, MONTEREY, SAN BENITO, SAN JOAQUIN, SANTA CRUZ, STANISLAUS & TUOLUMNE COUNTIES

	Rates	Fringes
Drywall Finisher/Taper		
AREA 1.....	$ 40.37	19.64
AREA 2.....	$ 36.24	18.24

---

* PAIN0016-012 01/01/2012

ALAMEDA, CONTRA COSTA, MARIPOSA, MERCED, MONTEREY, SAN BENITO, SAN FRANCISCO, SAN MATEO, SANTA CLARA AND SANTA CRUZ COUNTIES

	Rates	Fringes
SOFT FLOOR LAYER.....	$ 44.87	17.78

---

* PAIN0016-015 01/01/2012

CALAVERAS, MARIPOSA, MERCED, SAN JOAQUIN, STANISLAUS & TUOLUMNE COUNTIES

	Rates	Fringes
PAINTER.....	$ 28.35	15.74
Brush.....	$ 28.35	15.74

FOOTNOTES:
SPRAY/SANDBLAST: $0.50 additional per hour.

EXOTIC MATERIALS: $1.00 additional per hour.
HIGH TIME: Over 50 ft above ground or water level $2.00 additional per hour. 100 to 180 ft above ground or water level $4.00 additional per hour. Over 180 ft above ground or water level $6.00 additional per hour.

---

* PAIN0016-022 01/01/2012

SAN FRANCISCO COUNTY

	Rates	Fringes
PAINTER	$ 36.71	19.83

---

* PAIN0169-001 01/01/2012

FRESNO, KINGS, MADERA, MARIPOSA AND MERCED COUNTIES:

	Rates	Fringes
GLAZIER	$ 32.23	17.60

---

* PAIN0169-005 01/01/2012

ALAMEDA CONTRA COSTA, MONTEREY, SAN BENITO, SAN FRANCISCO, SAN MATEO, SANTA CLARA & SANTA CRUZ COUNTIES

	Rates	Fringes
GLAZIER	$ 41.88	20.39

---

* PAIN0294-004 01/01/2012

FRESNO, KINGS AND MADERA COUNTIES

	Rates	Fringes
PAINTER		
Brush, Roller	$ 25.67	15.68
Drywall Finisher/Taper	$ 30.47	16.86

FOOTNOTE:
Spray Painters & Paperhangers recive $1.00 additional per hour. Painters doing Drywall Patching receive $1.25 additional per hour. Lead Abaters & Sandblasters receive $1.50 additional per hour. High Time - over 30 feet (does not include work from a lift) $0.75 per hour additional.

---

* PAIN0294-005 01/01/2012

FRESNO, KINGS & MADERA

	Rates	Fringes
SOFT FLOOR LAYER	$ 27.83	15.46

---

* PAIN0767-001 01/01/2012

CALAVERAS, SAN JOAQUIN, STANISLAUS AND TUOLUMNE COUNTIES:

	Rates	Fringes

GLAZIER.....$ 32.24 18.59

PAID HOLIDAYS: New Year's Day, Martin Luther King, Jr. Day, President's Day, Memorial Day, Independence Day, Labor Day, Veteran's Day, Thanksgiving Day, and Christmas Day.

Employee rquired to wear a body harness shall receive $1.50 per hour above the basic hourly rate at any elevation.

PAIN1176-001 07/01/2011

HIGHWAY IMPR0VEMENT

	Rates	Fringes
Parking Lot Striping/Highway Marking:		
GROUP 1	$ 31.35	11.65
GROUP 2	$ 26.65	11.65
GROUP 3	$ 26.96	11.65

CLASSIFICATIONS

GROUP 1: Striper: Layout and application of painted traffic stripes and marking; hot thermo plastic; tape, traffic stripes and markings

GROUP 2: Gamecourt & Playground Installer

GROUP 3: Protective Coating, Pavement Sealing

---

* PAIN1237-003 01/01/2012

CALAVERAS; SAN JOAQUIN COUNTIES; STANISLAUS AND TUOLUMNE COUNTIES:

	Rates	Fringes
SOFT FLOOR LAYER	$ 28.25	16.53

PLAS0066-002 08/01/2011

ALAMEDA, CONTRA COSTA, SAN MATEO AND SAN FRANCISCO COUNTIES:

	Rates	Fringes
PLASTERER	$ 33.13	24.64

PLAS0300-001 07/01/2009

	Rates	Fringes
PLASTERER		
AREA 188: Fresno	$ 29.72	14.21
AREA 224: San Benito, Santa Clara, Santa Cruz	$ 34.22	14.08
AREA 295: Calaveras & San Joaquin Couonties	$ 32.82	15.10
AREA 337: Monterey County	$ 31.01	13.93
AREA 429: Mariposa, Merced, Stanislaus, Tuolumne Counties	$ 32.82	15.30

PLAS0300-005 06/28/2010

	Rates	Fringes
CEMENT MASON/CONCRETE FINISHER	$ 28.65	18.56

PLUM0038-001 07/01/2011

SAN FRANCISCO COUNTY

	Rates	Fringes
PLUMBER (Plumber, Steamfitter, Refrigeration Fitter)	$ 57.75	39.74

PLUM0038-005 07/01/2011

SAN FRANCISCO COUNTY

	Rates	Fringes
Landscape/Irrigation Fitter (Underground/Utility Fitter)	$ 46.96	28.85

PLUM0062-001 01/01/2012

MONTEREY AND SANTA CRUZ COUNTIES

	Rates	Fringes
PLUMBER & STEAMFITTER	$ 40.55	23.07

PLUM0159-001 01/01/2012

CONTRA COSTA COUNTY

	Rates	Fringes
Plumber and steamfitter		
(1) Refrigeration	$ 49.33	27.94
(2) All other work	$ 28.14	27.64

PLUM0246-001 01/01/2012

FRESNO, KINGS & MADERA COUNTIES

	Rates	Fringes
PLUMBER & STEAMFITTER	$ 35.45	23.32

PLUM0246-004 01/01/2012

FRESNO, MERCED & SAN JOAQUIN COUNIES

	Rates	Fringes
PLUMBER (PIPE TRADESMAN)	$ 13.00	9.23

PIPE TRADESMAN SCOPE OF WORK:
Installation of corrugated metal piping for drainage, as well as installation of corrugated metal piping for culverts in

connection with storm sewers and drains; Grouting, dry packing and diapering of joints, holes or chases including paving over joints, in piping; Temporary piping for dirt work for building site preparation; Operating jack hammers, pavement breakers, chipping guns, concrete saws and spades to cut holes, chases and channels for piping systems; Digging, grading, backfilling and ground preparation for all types of pipe to all points of the jobsite; Ground preparation including ground leveling, layout and planting of shrubbery, trees and ground cover, including watering, mowing, edging, pruning and fertilizing, the breaking of concrete, digging, backfilling and tamping for the preparation and completion of all work in connection with lawn sprinkler and landscaping; Loading, unloading and distributing materials at jobsite; Putting away materials in storage bins in jobsite secure storage area; Demolition of piping and fixtures for remodeling and additions; Setting up and tearing down work benches, ladders and job shacks; Clean-up and sweeping of jobsite; Pipe wrapping and waterproofing where tar or similar material is applied for protection of buried piping; Flagman

---

PLUM0342-001 07/01/2011

ALAMEDA & CONTRA COSTA COUNTIES

	Rates	Fringes
PIPEFITTER		
CONTRA COSTA COUNTY.....	$ 51.21	29.79
PLUMBER, PIPEFITTER, STEAMFITTER		
ALAMEDA COUNTY.....	$ 51.21	29.79

PLUM0355-004 07/01/2011

ALAMEDA, CALAVERAS, CONTRA COSTA, FRESNO, KINGS, MADERA, MARIPOSA, MERCED, MONTEREY, SAN BENITO, SAN JOAQUIN, SAN MATEO, SANTA CLARA, SANTA CRUZ, STANISLAUS, AND TUOLUMNE COUNTIES:

	Rates	Fringes
Underground Utility Worker /Landscape Fitter.....	$ 28.20	7.65

---

* PLUM0393-001 01/01/2012

SAN BENITO AND SANTA CLARA COUNTIES

	Rates	Fringes
PLUMBER/PIPEFITTER.....	$ 48.80	26.83

PLUM0442-001 01/01/2012

CALAVERAS, MARIPOSA, MERCED, SAN JOAQUIN, STANISLAUS & TUOLUMNE COUNTIES

	Rates	Fringes
PLUMBER & STEAMFITTER.....	$ 35.95	23.17

PLUM0467-001 01/01/2012

SAN MATEO COUNTY

	Rates	Fringes
Plumber/Pipefitter/Steamfitter...	$ 53.90	27.31

ROOF0027-002 09/01/2010

FRESNO, KINGS, AND MADERA COUNTIES

	Rates	Fringes
ROOFER.....	$ 27.65	8.07

FOOTNOTE: Work with pitch, pitch base of pitch impregnated products or any material containing coal tar pitch, on any building old or new, where both asphalt and pitchers are used in the application of a built-up roof or tear off: $2.00 per hour additional.

ROOF0040-002 08/01/2010

SAN FRANCISCO & SAN MATEO COUNTIES:

	Rates	Fringes
ROOFER.....	$ 33.33	11.04

ROOF0081-001 08/01/2010

ALAMEDA AND CONTRA COSTA COUNTIES:

	Rates	Fringes
Roofer.....	$ 34.06	9.54

ROOF0081-004 08/01/2011

CALAVERAS, MARIPOSA, MERCED, SAN JOAQUIN, STANISLAUS AND TUOLUMNE COUNTIES:

	Rates	Fringes
ROOFER.....	$ 28.49	10.75

ROOF0095-002 08/01/2011

MONTEREY, SAN BENITO, SANTA CLARA, AND SANTA CRUZ COUNTIES:

	Rates	Fringes
ROOFER		
Journeyman.....	$ 35.58	10.90
Kettle person (2 kettles); Bitumastic, Enameler, Coal Tar, Pitch and Mastic worker.....	$ 35.58	10.90
Kettleman (2 kettles), Bitumastic Enameler, Coal		

Tar, Pitch & Mastic.....$ 33.73 9.89

SFCA0483-001 08/01/2011

ALAMEDA, CONTRA COSTA, SAN FRANCISCO, SAN MATEO AND SANTA CLARA COUNTIES:

	Rates	Fringes
SPRINKLER FITTER (FIRE).....	$ 50.59	23.70

SFCA0669-011 04/01/2011

CALAVERAS, FRESNO, KINGS, MADERA, MARIPOSA, MERCED, MONTEREY, SAN BENITO, SAN JOAQUIN, SANTA CRUZ, STANISLAUS AND TUOLUMNE COUNTIES:

	Rates	Fringes
SPRINKLER FITTER.....	$ 33.35	17.75

SHEE0104-001 01/01/2012

AREA 1: ALAMEDA, CONTRA COSTA, SAN FRANCISCO, SAN MATEO, SANTA CLARA

AREA 2: MONTEREY & SAN BENITO

AREA 3: SANTA CRUZ

	Rates	Fringes
SHEET METAL WORKER		
AREA 1:		
Mechanical Contracts		
under $200,000.....	$ 44.47	31.25
All Other Work.....	$ 48.85	31.55
AREA 2.....	$ 38.00	28.21
AREA 3.....	$ 40.15	26.06

SHEE0104-015 07/01/2011

ALAMEDA, CONTRA COSTA, MONTEREY, SAN BENITO, SAN FRANCISCO, SAN MATEO, SANTA CLARA AND SANTA CRUZ COUNTIES:

	Rates	Fringes
SHEET METAL WORKER (Metal Decking and Siding only).....	$ 32.43	28.66

SHEE0162-001 07/01/2011

CALAVERAS AND SAN JOAQUIN COUNTIES:

	Rates	Fringes
SHEET METAL WORKER.....	$ 33.71	22.79

SHEE0162-003 07/01/2011

MARIPOSA, MERCED, STANISLAUS AND TUOLUMNE COUNTIES:

	Rates	Fringes
SHEET METAL WORKER (Excluding metal deck and siding)	$ 34.64	24.91

SHEE0162-004 07/01/2011

FRESNO, KINGS, AND MADERA COUNTIES:

	Rates	Fringes
SHEET METAL WORKER	$ 34.32	25.50

SHEE0162-013 07/01/2011

CALAVERAS, FRESNO, KINGS, MADERA, MARIPOSA, MERCED, SAN JOAQUIN, STANISLAUS AND TUOLUMNE COUNTIES:

	Rates	Fringes
Sheet metal worker (Metal decking and siding only)	$ 34.31	26.78

TEAM0094-001 07/01/2009

	Rates	Fringes
Truck drivers:		
GROUP 1	$ 27.13	18.99
GROUP 2	$ 27.43	18.99
GROUP 3	$ 27.73	18.99
GROUP 4	$ 28.08	18.99
GROUP 5	$ 28.43	18.99

FOOTNOTES:
Articulated dump truck; Bulk cement spreader (with or without auger); Dumpcrete truck; Skid truck (debris box); Dry pre-batch concrete mix trucks; Dumpster or similar type; Slurry truck: Use dump truck yardage rate.
Heater planer; Asphalt burner; Scarifier burner; Industrial lift truck (mechanical tailgate); Utility and clean-up truck: Use appropriate rate for the power unit or the equipment utilized.

TRUCK DRIVER CLASSIFICATIONS

GROUP 1: Dump trucks, under 6 yds.; Single unit flat rack (2-axle unit); Nipper truck (when flat rack truck is used appropriate flat rack shall apply); Concrete pump truck (when flat rack truck is used appropriate flat rack shall apply); Concrete pump machine; Fork lift and lift jitneys; Fuel and/or grease truck driver or fuel person; Snow buggy; Steam cleaning; Bus or personhaul driver; Escort or pilot car driver; Pickup truck; Teamster oiler/greaser and/or serviceperson; Hook tender (including loading and unloading); Team driver; Tool room attendant (refineries)

GROUP 2: Dump trucks, 6 yds. and under 8 yds.; Transit

mixers, through 10 yds.; Water trucks, under 7,000 gals.; Jetting trucks, under 7,000 gals.; Single-unit flat rack (3-axle unit); Highbed heavy duty transport; Scissor truck; Rubber-tired muck car (not self-loaded); Rubber-tired truck jumbo; Winch truck and "A" frame drivers; Combination winch truck with hoist; Road oil truck or bootperson; Buggymobile; Ross, Hyster and similar straddle carriers; Small rubber-tired tractor

GROUP 3: Dump trucks, 8 yds. and including 24 yds.; Transit mixers, over 10 yds.; Water trucks, 7,000 gals. and over; Jetting trucks, 7,000 gals. and over; Vacuum trucks under 7500 gals. Trucks towing tilt bed or flat bed pull trailers; Lowbed heavy duty transport; Heavy duty transport tiller person; Self- propelled street sweeper with self-contained refuse bin; Boom truck - hydro-lift or Swedish type extension or retracting crane; P.B. or similar type self-loading truck; Tire repairperson; Combination bootperson and road oiler; Dry distribution truck (A bootperson when employed on such equipment, shall receive the rate specified for the classification of road oil trucks or bootperson); Ammonia nitrate distributor, driver and mixer; Snow Go and/or plow

GROUP 4: Dump trucks, over 25 yds. and under 65 yds.; Water pulls - DW 10's, 20's, 21's and other similar equipment when pulling Aqua/pak or water tank trailers; Helicopter pilots (when transporting men and materials); Lowbedk Heavy Duty Transport up to including 7 axles; DW10's, 20's, 21's and other similar Cat type, Terra Cobra, LeTourneau Pulls, Tournorocker, Euclid and similar type equipment when pulling fuel and/or grease tank trailers or other miscellaneous trailers; Vacuum Trucks 7500 gals and over and truck repairman

GROUP 5: Dump trucks, 65 yds. and over; Holland hauler; Low bed Heavy Duty Transport over 7 axles

---

WELDERS - Receive rate prescribed for craft performing operation to which welding is incidental.

==========

Unlisted classifications needed for work not included within the scope of the classifications listed may be added after award only as provided in the labor standards contract clauses (29CFR 5.5 (a) (1) (ii)).

The body of each wage determination lists the classification and wage rates that have been found to be prevailing for the cited type(s) of construction in the area covered by the wage determination. The classifications are listed in alphabetical order of "identifiers" that indicate whether the particular rate is union or non-union.

Union Identifiers

An identifier enclosed in dotted lines beginning with characters other than "SU" denotes that the union classification and rate have found to be prevailing for that classification. Example: PLUM0198-005 07/01/2011. The first four letters , PLUM, indicate the international union and the four-digit number, 0198, that follows indicates the local union number or district council number where applicable , i.e., Plumbers Local 0198. The next number, 005 in the example, is an internal number used in processing the wage determination. The date, 07/01/2011, following these characters is the effective date of the most current negotiated rate/collective bargaining agreement which would be July 1, 2011 in the above example.

Union prevailing wage rates will be updated to reflect any changes in the collective bargaining agreements governing the rate.

Non-Union Identifiers

Classifications listed under an "SU" identifier were derived from survey data by computing average rates and are not union rates; however, the data used in computing these rates may include both union and non-union data. Example: SULA2004-007 5/13/2010. SU indicates the rates are not union rates, LA indicates the State of Louisiana; 2004 is the year of the survey; and 007 is an internal number used in producing the wage determination. A 1993 or later date, 5/13/2010, indicates the classifications and rates under that identifier were issued as a General Wage Determination on that date.

Survey wage rates will remain in effect and will not change until a new survey is conducted.

WAGE DETERMINATION APPEALS PROCESS

1.) Has there been an initial decision in the matter? This can be:

* an existing published wage determination
* a survey underlying a wage determination
* a Wage and Hour Division letter setting forth a position on a wage determination matter
* a conformance (additional classification and rate) ruling

On survey related matters, initial contact, including requests for summaries of surveys, should be with the Wage and Hour Regional Office for the area in which the survey was conducted because those Regional Offices have responsibility for the Davis-Bacon survey program. If the response from this initial contact is not satisfactory, then the process described in 2.) and 3.) should be followed.

With regard to any other matter not yet ripe for the formal process described here, initial contact should be with the Branch of Construction Wage Determinations. Write to:

Branch of Construction Wage Determinations
Wage and Hour Division
U.S. Department of Labor

200 Constitution Avenue, N.W.
Washington, DC 20210

2.) If the answer to the question in 1.) is yes, then an interested party (those affected by the action) can request review and reconsideration from the Wage and Hour Administrator (See 29 CFR Part 1.8 and 29 CFR Part 7). Write to:

Wage and Hour Administrator
U.S. Department of Labor
200 Constitution Avenue, N.W.
Washington, DC 20210

The request should be accompanied by a full statement of the interested party's position and by any information (wage payment data, project description, area practice material, etc.) that the requestor considers relevant to the issue.

3.) If the decision of the Administrator is not favorable, an interested party may appeal directly to the Administrative Review Board (formerly the Wage Appeals Board). Write to:

Administrative Review Board
U.S. Department of Labor
200 Constitution Avenue, N.W.
Washington, DC 20210

4.) All decisions by the Administrative Review Board are final.

==========

END OF GENERAL DECISION

CITY OF SARATOGA

13777 FRUITVALE AVENUE • SARATOGA, CALIFORNIA 95070 • (408) 868-1200

Incorporated October 22, 1956

COUNCIL MEMBERS:
Manny Cappello
Jill Hunter
Emily Lo
Howard Miller
Chuck Page

Scope of Work

SARATOGA VILLAGE PEDESTRIAN ENHANCEMENT STREET LIGHT WORK CML 5332(018)

The City of Saratoga will be installing 95 new Hapco Pedestal Poles and Philips Hadco LED street light fixtures (see appendix A). The location of the installation is at the Saratoga Village along Big Basin Way as illustrated on the map on appendix A.

Existing City Street Light Poles:

There is 35 locations which the City owns the existing street light poles and light fixtures. The Contractor shall remove the existing street light poles and light fixtures. The Contractor shall dispose of the all waste generated by the process of the project by the Waste Management Plan on Appendix B. The contractor is responsible to purchase the new street light poles and install them on the existing street light concrete pole bases. The Contractor will install the City supplied new LED street light fixtures. The contractor will be responsible to transfer all banner hardware from the existing street light poles to the new street light poles and this will be included in the bid item to install the City supplied new LED street light fixtures. The contractor will be responsible to pick up and bring to the job site the new LED street light fixtures from the City's vendor Electrical Distributors Company located at 365 Race Street, San Jose Ca 95125 (408) 293-5818 (Contact Juan Pineda) at no extra cost to the City. The Contractor shall connect the new or existing (pending of the existing condition) electrical wires to the point electrical connection at the adjacent electrical pull boxes. The Contractor shall schedule work so that there are no street light poles and street light fixtures out longer than a contractors working day shift. Contractor shall remove and install the street light poles and street light fixtures the same working day.

At these 35 locations the Contractor will be responsible for:

1. Provide Traffic Control

2. Remove existing City owned street light pole and light fixture.

3. Pick up the City owned new LED street light fixtures from the City's vendor Electrical Distributors Company.

4. Provide and install new street light pole to existing bases.

5. Install City owned new LED street light fixtures to new street light poles.

6. Transfer all banner hardware from the existing street light poles to the new street light poles.

7. Connect new or existing (pending of the existing condition) electrical wires to the point electrical connection at the adjacent electrical pull boxes.

8. Dispose of the all waste generated by the process of the project by the Waste Management Plan on Appendix B.

Existing PG&E Street Light Poles:

There is 60 locations which PG&E owns the existing street light poles and light fixtures. PG&E shall remove the existing street light poles, light fixtures and all electrical wires (from existing conduit).

The contractor is responsible to purchase the new street light poles and install them on the existing street light concrete pole bases. The Contractor will install the City supplied new LED street light fixtures. The contractor will be responsible to transfer all banner hardware from the existing street light poles to the new street light poles and this will be included in the bid item to install the City supplied new LED street light fixtures. The contractor will be responsible to pick up and bring to the job site the new LED street light fixtures from the City's vendor Electrical Distributors Company located at 365 Race Street, San Jose Ca 95125 (408) 293-5818 (Contact Juan Pineda) at no extra cost to the City. The Contractor shall install and pull new electrical wire (10 gage) in the existing conduits and connect the new electrical wires to the point electrical connection (as determined by PG&E), at the adjacent electrical pull boxes and the existing meter boxes.

The City, Contractor and PG&E shall coordinate schedules so that once PG&E removes a street light pole the Contractor shall install the new street light pole and new LED street light fixture the same working day. PG&E has approximated to remove between 5 and 10 street light poles a day. The Contractor shall schedule work so that there are no street light poles and street light fixtures out longer than a contractors working day shift. Contractor shall install the street light poles and street light fixtures the same working day it is removed by PG&E.

At these 60 locations the Contractor will be responsible for:

1. Provide Traffic Control

2. Pick up the City owned new LED street light fixtures from the City's vendor Electrical Distributors Company.

3. Provide and install new street light pole to existing bases.

4. Install City owned new LED street light fixtures to new street light poles.

5. Transfer all banner hardware from the existing street light poles to the new street light poles.

6. The Contractor shall install and pull new electrical wire (10 gage) in the existing conduits and connect the new electrical wires to the point electrical connection (as determined by PG&E), at the adjacent electrical pull boxes and the existing meter boxes.

Add Alternatives to Bid:

In the event that PG&E is unable to relinquish their existing conduit and concrete pole bases to the City at the time of Contract Award at the 60 locations which PG&E owns the existing street light poles and light fixtures. The City has added add alternatives to the bid. Prior to commencement of work, the Contractor shall apply and obtain a Department of Transportation (Caltrans) Construction Encroachment Permit.

Contractor shall apply for the Caltrans Construction Encroachment Permit within 10 days after the Notice of Award. Contractor shall comply with all the provisions of the Caltrans permit. Contractor shall be responsible for all costs associated with the Caltrans Construction Encroachment Permit. Contractor shall not commence work without a Caltrans Construction Encroachment Permit.

Contractor shall assume that Caltrans will require a payment of $3,000 to issue the Caltrans Construction Encroachment Permit. This cost is payable upon the submission of the application. Full compensation for conforming to the requirements of this section, including the payment to Caltrans, is included in the prices paid for the various items of work shown on the add alternative bid form and no additional compensation will be made therefore.

The Contractor shall provide a design by a California License Electrical Engineer and approved by the City's Engineer. The design shall consist but not limited to providing an electrical parallel connection, layout of new conduit on the street (just off the lip of gutter), electrical pull box locations, point of connection to electrical power as determined by PG&E and to existing meters. There are two meters, one on 3rd Street (Turkey Track adjacent to PG&E pole number 17375) and the second at Blaney Plaza (adjacent to PG&E pole number 17417). The design cost is included in the prices paid for the various items of work shown on the add alternative bid form and no additional compensation will be made therefore.

The Contractor shall provide the additional required traffic control for the added work in the street. The additional traffic control is included in the prices paid for the various items of work shown on the add alternative bid form and no additional compensation will be made therefore.

The Contractor will be responsible to saw cut or rock wheel a trench, place 2 inch PVC schedule 40 conduit and back fill trench and repave the street per City of Saratoga Restoration Of Utility

Excavations (see detail in Appendix A). The trench that will be required at 3rd Street (Turkey Track adjacent to PG&E pole number 17375) will require in addition to remove and restore the existing pavers. Any new conduit that will be required to cross existing crosswalks will have to be bored underneath the crosswalks.

Measurement and Payment:
The contract add alternative price paid per lineal foot of installing 2 inch PVC schedule 40 conduit shall include full compensation for furnishing all labor, materials, tools, equipment and incidentals and for doing all worked involved in saw cut or rock wheel a trench, place 2 inch PVC schedule 40 conduit and back fill trench and repave the street per City of Saratoga Restoration Of Utility Excavations (see detail in Appendix A), in addition to remove and restore the existing pavers, bore underneath the crosswalks.

The Contractor will be responsible to remove and replace concrete sidewalk for the installation of the new street light pole concrete bases. If required for the purpose of installing the conduit laterals from the street to the sidewalk, the Contractor will be responsible to remove and replace the concrete vertical curb and gutter. The Contractor will be responsible to install new street light pole concrete bases. The Contractor will be responsible to install the new electrical pull boxes adjacent to the new street light pole concrete bases.

Measurement and Payment:
The contract price paid per lineal foot for curbs and gutters, each new street light pole concrete bases, each new electrical pull boxes and square foot for sidewalks, ramps and driveway approaches shall include full compensation for furnishing all labor, materials, tools, equipment and incidentals and for doing all worked involved in construction the curbs and gutters, street light pole concrete bases, new electrical pull boxes and square foot for sidewalks, ramps and driveway approaches, complete in place, including concrete, aggregate base, excavation, and backfill.

The Contractor will be responsible to install and pull new electrical wire (10 gage) in the new conduits and connect the new electrical wires to the point electrical connection (as determined by PG&E), at the adjacent electrical pull boxes and the existing meter boxes. The payment shall be the same from the base bid to install and pull new electrical wire (10 gage).

At these 60 locations the Contractor will be responsible for:

1. Provide Traffic Control

2. Pick up the City owned new LED street light fixtures from the City's vendor Electrical Distributors Company.

3. Provide and install new street light pole to new bases.

4. Install City owned new LED street light fixtures to new street light poles.

5. Transfer all banner hardware from the existing street light poles to the new street light poles.

6. The Contractor shall install and pull new electrical wire (10 gage) in the new conduits and connect the new electrical wires to the point electrical connection (as determined by PG&E), at the adjacent new electrical pull boxes and the existing meter boxes.

Add Alternatives

7. Contractor shall apply and obtain a Department of Transportation (Caltrans) Construction Encroachment Permit.

8. Saw cut or rock wheel a trench, place 2 inch PVC schedule 40 conduit and back fill trench and repave the street per City of Saratoga Restoration Of Utility Excavations (see detail in Appendix A).

9. Remove and replace vertical curb and gutter.

10. Remove and replace concrete sidewalk.

11. Install electrical pull boxes.

12. Install street light pole concrete bases.

Should you have any questions about this, please give me a call at (408) 868-1218.

Macedonio Nunez, P.E.
Associate Engineer
City of Saratoga
mnunez@saratoga.ca.us

TECHNICAL SPECIFICATIONS

SARATOGA VILLAGE PEDESTRIAN ENHANCEMENT STREET LIGHT WORK PROJECT CML 5332(018)

List of Specifications

SECTION 15 TRAFFIC STRIPES, PARKING STALLS AND PAVEMENT MARKINGS

SECTION 01170 ACCIDENT PREVENTION

SECTION 01200 PROJECT MEETINGS

SECTION 01300 SUBMITTALS

SECTION 01530 TRAFFIC CONTROL/BARRIERS

SECTION 01560 TEMPORARY CONTROLS

SECTION 01700 PROJECT CLOSE OUT

SECTION 02050 REMOVAL OF PAVEMENTS AND CONCRETE SLABS

SECTION 02115 CLEARING AND GRUBBING

SECTION 02200 EARTHWORK

SECTION 02210 EXCAVATION, EMBANKMENT AND COMPACTION

SECTION 02232 AGGREGATE BASE COURSE

SECTION 02510 WEDGE GRIND/CUT CONFORM

SECTION 02511 HOT-MIXED ASPHALT PAVING

SECTION 02515 WALKS, CURBS, RAMPS AND GUTTERS

SECTION 03100 CONCRETE FORMWORK

SECTION 03250 CONCRETE ACCESSORIES

CITY OF SARATOGA DETAILS GENERAL CONSTRUCTION SPECIFICATIONS

SECTION 15 TRAFFIC STRIPES, PARKING STALLS AND PAVEMENT MARKINGS

PART 1: GENERAL

1.1 DESCRIPTION: The work of this section consist of installing traffic stripes, parking stalls and pavement markings.

A. Cleaning: Sweep and clean surface to eliminate loose material and dust.

B. Remove existing parking stall painting by sand blasting.

C. Striping: Thermoplastic and Paint Type, per Section 84 of the Caltrans Standard Specifications for Construction of Local Streets and Roads, May 2006 Edition

D. Do not apply traffic and lane marking paint until layout and placement have been verified with Engineer.

E. Apply paint with mechanical equipment to produce uniform straight edges. Apply at manufacturer's recommended rates to provide minimum 12 to 15 mils dry thickness. Use white color for normal striping, unless otherwise noted. Use blue color at handicap facilities.

END OF SECTION 15

SECTION 01170 ACCIDENT PREVENTION

PART 1: GENERAL

1.1 DESCRIPTION: The work of this section consist of establishing an effective accident prevention program and providing a safe environment for all the public and workers within the construction zone.

1.2 SUBMITTALS:

A. Accident Prevention Program: Before on-site work begins, submit for review and comment an accident prevention program. The Engineer will review the proposed program for compliance with OSHA and project requirements. If the program requires any revisions or corrections, the Contractor shall resubmit the program within 10 days. No progress payments will be processed until the program is approved. The program shall include:

1. Name of responsible supervisor to carry out the program.

2. Weekly and monthly safety meetings.

3. First aid procedures

4. Outline of each phase of the work, the hazards associated with each major phase, and the methods proposed to ensure property protection and safety of the public, and Contractor's employees. Identify the work included under each phase by reference to specification section or division numbers

5. Training, both initial and continuing.

6. Planning for possible emergency situations, such as floods, fires, cave-ins, slides, explosions, power outages, and wind storms. Such planning shall take into consideration the nature of construction, site conditions, and degree of exposure of persons and property.

7. Housekeeping

8. Fire Protection

B Certificates: Certify that all mechanical equipment has been inspected and meets OSHA requirements.

C. Submit a copy of test reports, as required by OSHA, for personnel working with hazardous materials.

D. Submit a report of safety meetings and of inspections.

E. Upon request, submit proof of employees' qualifications to perform assigned duties in a safe manner.

F. Confined Space Training Certification

1.3 QUALITY ASSURANCE:

A. Clauses entitled "Accident Prevention" and "Permits and Responsibilities" of the General Provisions. In case of conflicts between Federal, state, and local safety and health requirements, the most stringent shall apply. Equipment or tools not meeting OSHA requirements will not be allowed on the project sites. Failure to comply with the requirements of this section and related sections may result in suspension of work.

B. Qualification of Employees:

1. Ensure that employees are physically qualified to perform their assigned duties in a safe manner.

2. Do not allow employees to work whose ability or alertness is impaired because of drugs, fatigue, illness, intoxication, or other conditions that may expose themselves or others to injury.

3. Operators of vehicles, mobile equipment, hoisting equipment, and hazardous plant equipment shall be able to understand signs, signals, and operating instructions, and be capable of operating such equipment. Provide operating instructions for all equipment. Newly hired operators shall be individually tested by an experienced operator or supervisor to determine if they are capable of safely operating equipment.

1.4 ACCIDENT REPORTING:

A. Reportable Accidents: A reportable accident is defined as death, occupational disease, traumatic injury to employees or the public, property damage by accident in excess of $100, and fires. Notify the City and appropriate regulatory agencies within 24 hours of the reportable accident.

B. All other Accidents: The Contractor shall report all other accidents to the City and appropriate regulatory agencies as soon as possible and assist the City and other officials as required in the investigation of the accident.

PART 2: PRODUCTS

2.1 FIRST AID FACILITIES: Provide adequate facilities for the number of employees and the type of construction at the site.

2.2 PERSONNEL PROTECTIVE EQUIPMENT: Meet requirements of NIOSH and MSHA, where applicable, as well as ANSI.

2.3 BARRIERS: Section 01530.

PART 3: EXECUTION

3.1 EMERGENCY INSTRUCTIONS: Post telephone numbers and reporting instructions for ambulance, physician, hospital, fire department, and police in conspicuous locations at the work site.

3.2 ESCAPE ROUTES: Provide and maintain adequate escape routes at all times in accordance with the Life Safety Code (NFPA 101-85). No corridor, aisle, stairway, door, or exit shall be obstructed or used in a manner that interfered with escape routes.

3.3 PROTECTIVE EQUIPMENT:

A. Inspect personal protective equipment daily and maintain in a serviceable condition. Clean, sanitize, and repair, as appropriate, personal items before issuing them to another individual.

B. Inspect and maintain other protective equipment and devices before use and on a periodic basis to ensure safe operation.

3.4 SAFETY MEETINGS:

A. As a minimum, conduct weekly 15-minute "toolbox" safety meetings. These meetings shall be conducted by a foreman and attended by all construction personnel at the worksite.

B. Conduct monthly safety meetings for all levels of supervision. Notify the Contracting Officer so that he may attend. These meetings shall be used to review the effectiveness of the Contractor's safety effort, to resolve current health and safety problems, to provide a forum for planning safe construction activities, and for updating the accident prevention program. The Contracting Officer will enter the results of the meetings into his daily log.

3.5 HARD HATS AND PROTECTIVE EQUIPMENT AREAS:

A. A hard hat areas shall be designated and posted by the Contractor in a manner satisfactory to the City.

B. It is the Contractor's responsibility to require all those working on or visiting the site to wear hard hats and other necessary protective equipment at all times. As a minimum, provide six hard hats for use by visitors. Change liners before reissuing hats.

C. The contractor shall provide barricades and warning signs, or other warning devices as necessary prevent unauthorized access into the construction work area.

3.6 TRAINING:

A. First Aid: Provide adequate training to ensure prompt and efficient first aid.

B. Hazardous Material: Train and instruct each employee exposed to hazardous material in safe and approved methods of handling and storage. Hazardous materials are defined as explosive, flammable, poisonous, corrosive, oxidizing, irritating, or otherwise harmful substances that could cause death or injury.

C. OSHA Confined Space Training: The Contractor shall be required to submit their written policy for confined space entry. The policy shall include a copy of the permit used by the Contractor and identification of their safety/confined space entry equipment

END OF SECTION 01170

SECTION 01200 PROJECT MEETINGS

PART 1: GENERAL

1.1 PRECONSTRUCTION CONFERENCE: Before start of construction, the Contractor shall arrange an on-site pre-construction meeting with City of Saratoga.

1.2 PROGRESS MEETINGS:

A. The City will require, as a minimum, the Contractor to conduit weekly meetings with appropriate subcontractors, utility companies as required, and the Engineer and staff. The city reserves the right to require progress meeting on a more frequent basis during crucial periods of the project which require extra coordination efforts.

B. The Contractor shall be required to update his project schedule prior to the weekly progress meetings. The schedule shall include, as a minimum, activity ID numbers, task descriptions, task duration's, start and finish dates, identification of Critical Path tasks, % complete for each activity, total estimated cost for each activity, and float or slack time. The Contractor shall provide ten copies to the City prior to the Status meeting.

C. The Engineer will take meeting minutes for each meeting and assign actions accordingly. Meeting minutes will include action assignments to specific personnel and a completion date.

PART 2: PRODUCTS Not used.

PART 3: EXECUTION Not used.

.

END OF SECTION 01200

SECTION 01300 SUBMITTALS

PART 1: GENERAL

1.1 DESCRIPTION: The work of this section consists of submittal requirements before and during construction.

1.2 RELATED REQUIREMENTS: Closeout submittals - Section 01700.

1.3 SCHEDULES: As soon as possible after Notice of Award and before beginning any work, submit Progress Schedule and Schedule of Values as a package. The City will review the Progress Schedule and the Schedule of Values for format and content.

A. Progress Schedule: Submit to the Engineer for approval, four copies of a Critical Path Method Progress Schedule (normally in bar chart form) showing estimated starting and completion dates for each part of the work. The Critical Path method schedule shall be prepared using computer scheduling programs such as Primavera, Microsoft Project, Suretrak, P3, or others. The progress payment will not be approved by the City until an acceptable, up to date progress schedule is provided to the Engineer. The purpose of the schedule will be to assure adequate planning and execution of the work by the Contractor; to assure coordination of the work of the various subcontractors and utility companies; to assist the contractor, City and Engineer in monitoring the progress of the work and evaluating proposed changes to the contract and schedule; to assist the Engineer, City, and Contractor in the preparation and evaluation of the Contractor's monthly progress payments; and to alert the City as to the proposed closure of streets and other public facilities.

B. Schedule of Values: Submit a schedule values for the dollar values based on the Contract Bid Schedule including all bid items, and for the work activities identified in the project schedule. Break down into component parts each bid item involving a series of operations for which progress payments may be requested. The total costs for the component parts shall equal the bid amount for that item, and the total cost of all items shall equal the contract sum. The City may request additional tasks be identified in the schedule of values or data to verify accuracy of dollar values. The Schedule of Values will form the basis for progress payments as provided for in the General Provisions.

1.4 SHOP DRAWINGS, PRODUCT DATA, AND SAMPLES:

A. General Procedures:

1. As specified in the individual sections, forward submittals to the City at least 15 days before need for review. Unless a different number is specified, submit five copies of each shop drawing, three specimens of each sample, and five copies of all other submittals requested, all of which will be retained by the City. Submit any additional copies that are to be returned.

2. Coordinate all submittals and review them for legibility, accuracy, completeness, and compliance with contract requirements. Forward submittals that are related to or affect one another as a package to facilitate coordinated review.

3. Submittals will not be accepted for review if they are not on the correct form, an incorrect amount of submittals are submitted, the transmittal form is incorrectly filled out, submittals are not coordinated, or submittals do not show evidence of Contractor's approval.

4. The City reserves the right to require submittals in addition to those called for in individual sections.

B. Specific Procedures:

1. Shop Drawings: Identify each copy of shop drawings with contract drawing number in lower right hand corner.

2. Samples: Samples shall be large enough to illustrate clearly the functional characteristics and full range of color, texture, or pattern.

3. Manufacturers' Literature: Submit only pertinent pages; mark each copy of standard printed data to identify products referenced in specification section.

C. The City's Review:

1. After approving submittals, The City will return Contractor's copies.

2. If submittals are not approved, The City will return all copies to Contractor with reasons for rejection. Resubmit, identifying changes.

3. Any work done before approval shall be at Contractor's own risk.

1.5 APPROVED EQUALS:

A. For each item proposed as an "approved equal," submit a separate request. With each request submit supporting data, including:

1. Drawings and samples as appropriate.

2. Comparison of the qualities of the proposed item with that specified.

3. Changes required in other elements of the work because of the substitution.

4. Name, address, and telephone number of vendor.

5. Manufacturer's literature regarding installation, operation, and maintenance, including schematics for electrical and hydraulic systems, lubrication requirements, and parts list. Describe availability of maintenance service, and state source of replacement materials.

B. A request for approval constitutes a representation that Contractor:

1. Has investigated the proposed item and determined that it is equal or superior in all respects to that specified.

2. Will provide the same warranties for the proposed item as for the item specified.

3. Has determined that the proposed item is compatible with interfacing items.

4. Will coordinate the installation of an approved item and make all changes required in other elements of the work because of the substitution.

5. Waives all claims for additional expenses that may be incurred as a result of the substitution.

C. The Engineer has the final determination as to whether the proposed substitute product is equal. If the determination is made the product is not equal, the contractor shall be required to provide a product which meets the specifications.

1.6 MANUFACTURER'S INSTALLATION INSTRUCTIONS: When contract documents require compliance with manufacturer's printed instructions, provide one complete set of instructions for The City and keep another complete set of instructions at the project site until substantial completion.

1.7 MATERIAL SUBMITTAL LIST- The names of the manufactures/producers of the materials proposed by the Contractor for use under this contract shall be submitted to the Engineer, for review, within (30) calendar days after the award of the contract prior to beginning work. The manufacture‘s producers specifications and or certificates of compliance shall be submitted for all applicable products on the list.

ITEM DESCRIPTION

Construction Schedule
Material Submittal List
Hapco Street Light Pole
Waste Management Plan
Electrical Wire 10 gage
Traffic Control Plan
2 inch PVC Schedule 40 conduit
Christy N09 Electrical Pull Box
Site Inspection photo/pictures
Notices to Residents, Businesses and Schools
Traffic Control Plan
Class 2 Aggregate Base (recycle rock will not be accepted)
Asphalt Concrete (Caltrans) Type B Medium 1/2 & 3/4 inch maximum aggregate size, medium graded (recycle asphalt product RAP will not be accepted)
Class B Portland Cement Concrete (5 sack mix with 1 pint lampblack /cubic yard)

END OF SECTION 01300

SECTION 01530 TRAFFIC CONTROL/BARRIERS

PART 1: GENERAL

1.1 DESCRIPTION: The work of this section consists of furnishing, installing, and maintaining barriers to protect existing facilities and the public from construction operations. Per Section 7-1.08, “Public Convenience,” and 7-1.09, “Public Safety”, of the Caltrans Standard Specifications for Construction of Local Streets and Roads, May 2006 Edition Caltrans, set forth the Contractor’s responsibilities for public convenience and public safety.

When the work operations are adjacent to the signalized intersection, the Contractor shall provide/contract Sheriff Deputy Officers for the traffic control at the signalized intersections .This shall be paid under Item #3 Traffic Control at no additional cost to the City.

Please contact Carl Neusel for the Sheriff Deputy Officers at (408) 808-4610. Carl.Neusel@sheriff.sccgov.org

1.2 SUBMITTALS

A. A copy of the Traffic Control Supervisor's Certification

B. Traffic Control Plan

PART 2: PRODUCTS

2.1. GENERAL: Material may be new or used, but shall be suitable for intended purpose. Fences and barriers shall be structurally adequate and neat in appearance.

2.2. FENCING: Chain link, 2-inch mesh, minimum height, 6 feet.

2.3. BARRICADES AND SIGNS: ANSI D6.1-78, "Manual on Uniform Traffic Control Devices" (MUTCD), Part VI.

2.4. LUMBER: Free of nails, large knot holes and splinters.

2.5. BARRIER TAPE: Banner Guard, imprinted with "CAUTION: CONSTRUCTION AREA", or approved equal.

2.6. FLASHING ARROW SIGNS: Per section 12-3.03 of the Caltrans Standard Specifications for Construction of Local Streets and Roads, May 2006 Edition Caltrans. Provide electric arrow board(s) for lane reduction.

2.7. SIGNS: Overhead Lines Above

PART 3: EXECUTION

3.1 GENERAL

A. The Contractor shall provide all barricades, flagmen, control devices, etc. necessary to control traffic and protect areas under construction. All traffic control procedures, signing, lighting, barricading, etc., shall conform to the latest edition of the Manual of Uniform Traffic Control Devises.

B. The Contractor shall submit to the City for approval, a Traffic Control Plan (TCP) prepared by a Certified Traffic Control Supervisor. No demolition or construction activities may commence until the TCP has been approved.

C. The Traffic Control Supervisor shall be certified as a Worksite Traffic Supervisor by the American Traffic Safety Services Association (ATSSA).

D. All barricading and signage shall be left in place until the work has been constructed, inspected and approved by the City.

E. The Contractor shall provide the name, address, and phone number of his representative who may be reached at any time during the life of the project regarding repairs, detours, barricading, etc. This information shall be furnished in writing to the City, Fire Department, and Police Department.

F. The Contractor shall be responsible for informing the public of the traffic conditions existing within the construction area at all times by placement of appropriate warning and advisory signs. The Contractor shall provide and maintain all traffic control and safety items. The Contractor assumes sole and complete responsibility for the job and site conditions including safety of all persons and property, from start until final acceptance of construction of construction. This requirement shall apply continuously twenty-four (24) hours/day and shall be limited to normal work hours.

G. Notify the police and fire department 24 hours prior to any road closure.

3.2 PROTECTION OF PUBLIC:

A. Fence, barricade, or otherwise block off the immediate work area to prevent unauthorized entry to the work area.

B. Erect and maintain barricades, lights, danger signals, and warning signs in accordance with ANSI D6.1-78.

C. Illuminate barricades and obstructions at night; keep safety lights burning from sunset to sunrise.

D. Adequately barricade and post open cuts in or adjacent to thoroughfares.

E. Protect pedestrian traffic by guardrails or fences.

F. When pedestrian traffic is detoured into a roadway, provide temporary walkways with any necessary protection at ends and overhead. For walkways, use lumber running parallel to direction of traffic movement and provide ramps at changes of elevation.

G. Cover pipes, hoses, and power lines crossing sidewalks and walkways with troughs using beveled edge boards.

H. Erect and maintain sufficient detour signs at road closures and along detour routes.

3.3 BARRIER TAPE: Install where directed by the City. Keep a minimum of two rolls on site at all times.

3.4 REMOVAL: Completely remove barriers no longer needed and when approved by the City.

END OF SECTION 1530

SECTION 01560 TEMPORARY CONTROLS

PART 1: GENERAL

1.1 DESCRIPTION: The work of this section consists of providing temporary controls and disposal of construction wastes and debris. The Contractor shall pay for all disposal costs unless otherwise indicated in the Contract Documents.

1.2 SUBMITTALS:

A. Location and Operator of the Contractor's Solid Waste Disposal Facility to be utilized for construction all materials disposed of off the project site.

PART 2: PRODUCTS Not used.

PART 3: EXECUTION

3.1 HOUSEKEEPING:

A. Keep project neat, orderly, and in a safe condition at all times.

B. Provide enough refuse containers for collecting construction debris. Refuge containers shall be emptied as required to maintain a neat and orderly environment.

C. Wet down dry materials and rubbish to prevent blowing dust.

D. Keep volatile wastes in covered containers.

E. Utilize or remove excavated material as soon as possible.

3.2 DISPOSAL:

Soil Evaluation: All soil materials excavated within the project area will be evaluated upon removal. Soil materials will be visually screened for debris and staining by the Engineer. The Contractor shall separate out all trash and debris for soils to be reused onsite.

All trash and debris encountered during excavation shall be stored separately or disposed of at a lawfully permitted landfill facility.

Unless otherwise specified, all removed materials becomes the property of the Contractor and shall be properly disposed of offsite. Immediately remove hazardous rubbish from project site. Place other construction debris in refuse containers at least daily. Dispose of refuse at least weekly, in a legal manner, at approved public or private dumping areas.

3.3 ITEMS IDENTIFIED TO BE REMOVED OR SALVAGED

A. All items identified to be removed or salvaged shall be removed in a manner to minimize damage to the item to be salvaged.

3.4 AIR AND WATER POLLUTION CONTROL:

3 Take all necessary reasonable measures to reduce air and water pollution by any material or equipment used during construction.

4 To control erosion during and after project implementation, the contractor shall implement a Stormwater Pollution Prvention Plan (SWPPP) with appropriate Best Management Practices (BMPs), in accordance with San Francisco Bay Regional Water Quality Board (RWQCB) guidelines

5 Do not dispose of any volatile wastes or oils in storm or sanitary drains.

6 Do not allow waste materials to be washed into streams or bodies of water.

7 Sod or seed slopes, as specified in Section 02950, as soon as possible to prevent erosion. If it is impossible to prevent erosion, the City may require construction of sedimentation basins to prevent water pollution.

8 The Contractor shall comply with all of the State of California Construction De-watering Permit requirements.

3.5 DUST PREVENTION

A. During the construction and until final acceptance by the City, the Contractor shall be responsible for controlling dust emissions in the construction area.

B. No earthwork activities shall be performed when the sustained wind speed exceeds thirty (30) miles per hour.

C. All fill areas shall be compacted on a daily basis as required in the project.

D. Any mud or dirt carried out onto paved surfaces shall be cleaned up in a daily basis.

D. The Contractor shall promptly comply will all directives from the City relating to dust control. If the Contractor fails to comply or provide adequate means to control dust, a stop work order will be \issued until the problems have been corrected.

END OF SECTION 01560

SECTION 01700 PROJECT CLOSE OUT

PART 1: GENERAL

1.1 DESCRIPTION: The work of this section consist of final cleanup, closeout submittals, and final inspection procedures.

1.2 SUBMITTALS

A. As specified in this section.

PART 2: PRODUCTS - Not Used

PART 3: EXECUTION

3.1 POSTED OPERATING INSTRUCTIONS: As specified in the individual sections. Furnish operating instructions attached to or posted adjacent to equipment. Include wiring diagrams, control diagrams, control sequence, start-up, adjustment, operation, lubrication, shut-down, safety precautions, procedures in the event of equipment failure, and other items of instruction recommended by the manufacturer.

3.2 CLEANING: Remove all tools, equipment, surplus materials, and rubbish. Restore or refinish surfaces of existing facilities that are marred, scratched, or damaged due to the work of this contract to match original condition. Remove grease, dirt, stains, foreign materials, and labels from interior and exterior finished surfaces. Do any required waxing and polishing. Sweep paved areas; rake grounds. At time of final inspection, project shall be thoroughly clean and ready for use.

3.3 PROJECT RECORD DRAWINGS:

A. The contractor shall maintain an up to date set of red-lined record drawings which indicate all changes and revisions to the original design that affect the permanent structures and will exist in the completed work. The contractor shall also reference all underground utilities to semi-permanent or permanent physical objects. Reference water, sewer, telephone, and electric lines to corners of buildings. Include schematic diagrams showing terminal numbers for all electrical equipment.

B. Keep record drawings current. Inspection will be made monthly. Certification of accuracy and completeness will be required on monthly payment requisitions. Project record drawings are the property of the City and shall be delivered to the City before closeout.

3.4 CLOSEOUT SUBMITTALS: Submit before final inspection request

A. Project Record Drawings: As specified above.
B. Guarantees and Bonds: As specified in individual sections.

C. Spare Parts and Materials: As specified in individual sections.

D. Operation and Maintenance Data: As specified in Section 01730.

E. Operation and Maintenance Data: Provide four complete sets of the following data. Data shall be on 8½-inch by 11-inch sheets or manufacturers' standard catalogs, suitable for side binding. Include the following as applicable:

1. Replacement parts list
2. Wiring diagrams
3. Manufacturers' model numbers
4. Name, address, and telephone number of local representative
5. Basic operational features
6. Schedule of maintenance work
7. Lubricants
8. Emergency procedures
9. Starting, operating, and shut-down procedures
10. Seasonal shut-down procedures
11. Cleaning agents and methods
12. Color and texture designations.

F. Operating Tools: As specified in the individual sections.

G. Special Tools: One set of special tools required to operate, adjust, dismantle, or repair equipment. Special tools are those not normally found in possession of mechanics or maintenance personnel.

3.5 SUBSTANTIAL COMPLETION AND FINAL INSPECTION: Submit written certification that project, or designated portion of project, is substantially complete, and request in writing a final inspection. The City will make an inspection within 10 days of receipt of request.

A. When the City determines that the work is substantially complete, he will prepare a list of deficiencies to be corrected before final acceptance and issue a Letter of Substantial Completion.

B. If the City determines that the work is not substantially complete, he will immediately notify Contractor in writing, stating reasons. After completing work, Contractor shall resubmit certification and request a new final inspection.

3.6 ACCEPTANCE OF THE WORK: After all deficiencies have been corrected, a Letter of Acceptance will be issued.

3.7 POST-CONSTRUCTION INSPECTION: Before expiration of warranty period, the City will inspect the project and notify Contractor in writing of all deficiencies.

END OF SECTION 01700

SECTION 02050 REMOVAL OF PAVEMENTS AND CONCRETE SLABS

PART 1: GENERAL

1.1 DESCRIPTION: The work of this section consists of demolition and removal of pavements and concrete slabs. The work includes filling and grading.

1.2 QUALITY ASSURANCE: Comply with safety requirements for demolition, ANSI A10.6-83.

1.3 PROJECT CONDITIONS:

A. Keep dust to a minimum at removal site and on haul roads. Use sprinklers or water trucks as necessary.

B. Ensure safety of persons in demolition area.

PART 2: PRODUCTS

PART 3: EXECUTION

3.1 PREPARATION: Protect buildings, structures, utilities, concrete/asphalt and vegetation to remain.

A. Provide Pedestrian and Traffic Control as necessary to ensure safe public access through the construction / demolition area.

3.2 DEMOLITION:

A. Pavement and Slabs: Scarify or rip bituminous pavement; break up concrete. Saw cut concrete and asphalt adjacent to new construction. Remove completely.

3.3 DISPOSAL:

A. Dispose of unsuitable and excess material offsite at approved facilities.

B. Salvaged Material: All salvaged material remains the property of the City. Store where directed by City.

END OF SECTION 02050

SECTION 02115 CLEARING AND GRUBBING

PART 1 - GENERAL

CLEARING AND GRUBBING shall conform to the provisions of Section 16, "Clearing and Grubbing", of Caltrans Standard Specifications and the following special provisions. This shall be paid under various items at no additional cost to the City.

Limits of work shall include the proposed street limits included in Appendix B

Caution:

1. All existing raspberry bush/plants shall be protected during project operations and not cleared and grubbed.

2. Tress and bushes at adjacent residential fence line/property line shall be protected and not cleared and grubbed

1.1 SUMMARY

A. This Section includes, but is not limited to, the following:

- Protection of existing trees.
- Clearing and grubbing.
- Removing of existing site trash
- Removing of existing site debris
- Removing of existing site wood chips
- Removing of existing Asphalt Concrete debris

B. Related Sections: The following sections are noted as containing requirements that relate to this Section, but may not be limited to this listing.

1. - Earthwork.

1.2 DESCRIPTION:

A. Provide complete removal of marked trees, shrubs and underbrush as determined by the City of Saratoga Public Works Department as necessary to

complete project.

B. Any pruning of trees shall be performed under the supervision of an International Society of Arboriculture (ISA) Certified Arborist and according to ISA standards.

C. A preconstruction meeting shall be held with the contractor following prior to start of work to review tree protection measures.

D. Unless otherwise approved, all construction activities shall be conducted outside the designated fenced area, including the time after fencing is removed. Construction activities include, but are not limited to, demolition, grading, trenching, equipment cleaning, stockpiling and dumping materials (including soil fill), and equipment/vehicle operation and parking.

E. Any approved grading or trenching beneath tree canopies shall be performed manually using shovels.

G. City of Saratoga Tree Protection Ordinance: Article 15-50 of the City of Saratoga's Municipal Code (i.e., Tree Protection Ordinance) outlaws the removal, damage, pruning, or encroachment upon any protected tree located on private or public property without first having obtained a tree removal, pruning, or encroachment permit from the City. A protected tree is defined as any of the following:

- Any native tree having a diameter at breast height (dbh) of 6 inches (in) or greater
- Any other tree having a dbh of 10 in or greater
- Any street tree (i.e., within public street or right-of-way)
- Any heritage tree, defined in Article 15.50.020(l) as "any tree of historic significance as a tree having historic value related to the heritage of the City and designated by action of the City Council upon recommendation of the Heritage Preservation Commission"

3.1 Any tree required to be planted, retained, or replaced under other provisions of the Municipal Code

1.3 SCHEDULING:

A. Notify Owner's Representative 48 hours prior to beginning work.

PART 2- PROJECT CONDITIONS

A. Traffic: Conduct site clearing operations to ensure minimum interference with roads, streets, walks, and other adjacent occupied or used facilities. Do not close or obstruct streets, walks or other occupied or used facilities, unless otherwise noted, without permission from authorities having jurisdiction.

B. Protection of Existing Improvements: Provide protections necessary to prevent damage to existing improvements indicated to remain in place.

   A. Protect improvements on adjoining properties and on Owner's property.
   B. Restore damaged improvements to their original condition, as acceptable to property owners.

C. Protection of Existing Trees and Vegetation: Protect existing trees and other vegetation indicated to remain in place on Owner’s property, in street right of way and in creek right of way, against unnecessary cutting, breaking or skinning of roots, skinning or bruising of bark, smothering of trees by stockpiling construction materials or excavated materials within drip line, excess foot or vehicular traffic, or parking of vehicles within drip line. Provide temporary guards to protect trees and vegetation to be left standing.

   A. Water trees and other vegetation to remain within limits of contract work as required to maintain their health during course of construction operations.
   B. Provide protection for roots over 1-1/2 inch diameter that are cut during construction operations. Coat cut faces with an emulsified asphalt, or other acceptable coating, formulated for use on damaged plant tissues. Temporarily cover exposed roots with wet burlap to prevent roots from drying out; cover with earth as soon as possible.
   C. Repair or replace trees and vegetation indicated to remain which are damaged by construction operations, in a manner acceptable to Architect. Employ a licensed arborist to repair damages to trees and shrubs.
   D. Replace trees which cannot be repaired and restored to full-growth status, as determined by arborist.

PART 3 - PRODUCTS

3.1 MATERIALS:

   A. Tree paint: water-proof, asphalt based paint, with anti-septic properties; R.I.W. Tree Surgery Paint by Toch Bros., New York; Sherwin-Williams Pruning Compound, or approved equal.

PART 4 - EXECUTION

4.1 PROTECTION:

A. Provide protection of trees, shrubs, lawn areas, and other features remaining as part of final landscape.

B. Provide protection to bench marks, existing structure, roads, sidewalks, paving, utilities and curbs against damage from clearing operations, vehicular and foot traffic. Re-establish if disturbed.

C. Provide designated temporary roadways, walkways, and detours for vehicular and pedestrian traffic.

4.2 CLEARING:

A. General: Remove trees, shrubs, grass and other vegetation, improvements, or obstructions as required to permit installation of new construction. Remove similar items elsewhere on site or premises as specifically indicated. "Removal" includes digging out and off-site disposing of stumps and roots or other material.

1. Cut minor roots and branches of trees indicated to remain in a clean and careful manner, where such roots and branches obstruct installation of new construction.

B. Topsoil: Topsoil is defined as friable clay loam surface soil found in a depth of not less than 4 inches. Satisfactory topsoil is reasonably free of subsoil, clay lumps, stones, and other objects over 2 inches in diameter, and without weeds, roots, and other objectionable material.

2.1.1. Strip topsoil to whatever depths encountered in a manner to prevent intermingling with underlying subsoil or other objectionable material.

2.1.1.1. Remove heavy growths of grass from areas before stripping.

2.1.1.2. Where existing trees are indicated to remain, leave existing topsoil in place within drip lines to prevent damage to root system.

2.1.2. Stockpile suitable topsoil in storage piles in areas indicated or directed. Construct storage piles to provide free drainage of surface water. Cover storage piles, if required, to prevent wind erosion.

2.1.3. Dispose of unsuitable or excess topsoil same as specified for disposal of waste material, or use for fill if approved by Engineer or Owner’s Geotechnical Engineer.

C. Provide cleaning of areas as required for access to site excavation and performance of Work.

D. Cut down marked trees and underbrush within marked areas. Grub out stumps, roots, and embedded rocks.

E. Clear out undergrowth and deadwood, up to an eight foot height, without disturbing sub-soil.

F. Do not disturb trees or roots of trees or shrubs which are to remain.

4.3 CLEAN UP:

A. Burning on Owner's Property: Burning is not permitted on Owner's property.

B. Removal from Owner's Property: Remove waste materials and unsuitable or excess topsoil from Owner's property, except as otherwise noted.

4.4 MEASUREMENT

A. Site clearing and grubbing shall be measured on a lump sum basis.

4.5 PAYMENT

A. The lump sum price paid for site clearing and grubbing shall include compensation for furnishing all materials, labor, equipment and incidentals for doing all the work involved in site clearing and grubbing as required in the Special Provisions, shown on the Plans herein, but excluding any work for which there is a pay item in the Contract.

END OF SECTION 02115

SECTION 02200 EARTHWORK

1 DESCRIPTION

This section shall consist of excavating, filling, stockpiling, removing, and satisfactorily disposing of all materials within the limits of the work required to construct the roadways and other areas for drainage or other purposes in accordance with these special provisions, and as specified in Section 19, Earthwork@ of the State of California Department of Transportation Standard Specifications, latest edition and subsequent addenda, and in conformity with the dimensions and typical sections shown on the plans and with the lines and grade established by the Engineer.

2 MATERIALS

2.1 All suitable material taken from excavation shall be used in the formation of subgrade and for backfilling as indicated on the plans or as directed by the Engineer.

2.2 CLASSIFICATION All material excavated shall be defined as AUnclassified Excavation.@

2.3 FILL MATERIAL There are two types of acceptable fill materials.

A. General Fill. All fill material shall be a soil or soil-rock mixture which is free from organic matter, rubble or other deleterious substances. The fill material shall not contain rocks or lumps over 6 inches in greatest dimension, and not more than 15 percent larger than 2-1/2 inches.

B. Select Fill. Select fill shall meet the above requirements for general fill and in addition it shall have a plasticity index no greater than 15.

3 CONSTRUCTION METHODS

3.1 GENERAL The rough excavation shall be carried to the necessary depth to obtain the specified depth of subgrade densification shown on the plans. Should the Contractor, through negligence or other fault, excavate below the designated lines, he shall replace the excavation with approved materials, in an approved manner and condition, at his own expense. The Engineer shall have complete control over the excavation, moving, placing, and disposition of all material and shall determine the suitability of material to be placed in embankments. All material determined unsuitable shall be disposed of offsite. Topsoil shall not be used in fills or in subgrades but shall be disposed of offsite.

The Contractor shall inform and satisfy himself as to the character, quantity, and distribution of all material to be excavated. No payment will be made for any excavated material which is used for purposes other than those designated. All point areas shall be leveled to a uniform line and section and shall present a neat appearance before project acceptance.

Those areas outside of the pavement areas in which the top layer of soil material becomes compacted due to hauling or to any other activity of the Contractor, shall be scarified and diced to a depth of 4 inches, as directed, to loosen and pulverize the soil.

3.2 EXCAVATION Excavation shall be performed as indicated on the contract plans to the lines, grades, and elevation shown or as directed by the Engineer, and shall be made so that the requirements for formation of embankments can be followed. No excavation or stripping shall be started until the Engineer has staked out the proposed work. All material encountered within the limits indicated shall be removed and disposed of. During the process of excavation, the grade shall be maintained so that it will be well drained at all times.

Mulch, peat, matted roots, or other yielding material, unsatisfactory for subgrade foundation, shall be removed to the depth specified, to provide a satisfactory foundation. Where roots of adjacent trees are encountered the roots are not to be cut but are to be protected with layers of wet burlap. Unsatisfactory materials shall be disposed of offsite at no additional cost. The portion so excavated shall be refilled with suitable selected material as specified, obtained from the grading operations or borrow area and thoroughly compacted by rolling. The necessary refilling will constitute a part of the embankment. Where trenching out is done to provide for a course of pavement, the depths thus creased shall be ditched at frequent intervals to provide adequate drainage. Widening or narrowing of the section and raising or lowering of the grade to avoid haul will not be permitted.

The installation and removal of utilities required to permit the orderly progress of work will be accomplished by local agencies, unless otherwise shown on the plans. All existing foundations shall be excavated for at least 2 feet below the top of the subgrade and the material disposed of as directed. All foundation thus excavated shall be backfilled with suitable material and compacted.

In cut areas, the subgrade under areas to be paved shall be compacted as specified on the plan. Material shall be moistened as specified on the plans prior to compaction. Any unsuitable materials encountered shall be removed from the site at no extra cost in accordance with Section 21 of the State of California Department of Transportation Standard Specifications latest edition and ubsequent addenda for Class A@ subgrade.

Stones or rock fragments larger than 4 inches in their greatest dimension will not be permitted in the top 6 inches of the subgrade.

In cuts, all loose or protruding rocks on the back slopes shall be barred loose or otherwise removed to line or finished grade of slope. All cut-and-fill slopes shall be uniformly dressed to the slope, the typical section, and alignment shown on the plans.

Any excess excavation material from common excavation or trench spoil shall be stockpiled in a neat and uniform manner. Where any old fill materials or soft zones are exposed by excavation to the subgrade level, they shall be overexcavated and replaced with compacted fill. The Engineer shall approve the overexcavation before any additional earthwork is done.

3 EQUIPMENT

The Contractor may use any type of earthmoving, compaction, and watering equipment he may desire or has at his disposal, provided the equipment does not damage below grade structure or existing tree roots, is in a satisfactory condition and is of such capacity that the construction schedule can be maintained as planned by the Contractor and as approved by the Engineer in accordance with the calendar days bid for the construction. The Contractor shall furnish, operate, and maintain such equipment as is necessary to control uniform density, layers, section, and smoothness of grade.

4 PREPARATION AND PROTECTION OF THE TOP OF THE SUBGRADE. On areas to be paved, the specified depth cut areas shall be compacted to the density specified on the plans. When completed, the surface shall be true to the lines, grades, and cross sections shown on the plans.

After all drains, structures, ducts, and other underground appurtenances along the edges or under the pavement have been completed, the subgrade shall be compacted to the depth specified. Any irregularities or depressions that develop under rolling shall be corrected by loosening the material at these places and adding, removing, or replacing material until the surface is smooth and uniform. Any portion of the area which is not accessible to a roller shall be compacted to the required density by approved mechanical tampers. The material shall be sprinkled with water during rolling or tamping, when directed by the Engineer.

At all times, the top of the subgrade shall be kept in such condition that it will drain readily and effectively. In handling materials, tools, and equipment, the Contractor shall protect the subgrade from damage by laying planks when directed and shall take other precautions as needed. In no case will vehicles be allowed to travel in a single track. If ruts are formed, the subgrade shall be reshaped and rolled.

5 **TOLERANCES** In those areas upon which a subbase or base course is to be placed, the top of the subgrade shall be of such smoothness that, when tested with a 16-foot straightedge applied parallel and at right angles to the centerline, it shall not shown any deviation in excess of 2 inch, or shall not be more than 0.05 foot from true grades established by grade hubs or pins. Any deviation in excess of these amounts shall be corrected by loosening, adding or removing materials, and recompacting by sprinkling and rolling.

6 **SUBGRADE PREPARATION** The subgrade shall be graded and prepared as specified in Section 21, ASubgrade Preparation@ and the "Special Subgrade Requirements" shown on the Plans. The "Special Subgrade Requirements" supercede the City Standard Specifications/Plan Details.

END OF SECTION 02200

SECTION 02210 -EXCAVATION, EMBANKMENT AND COMPACTION

PART 1 - GENERAL

1.1 SECTION INCLUDES

A. Excavating and grading for site, landscaping areas and sidewalks.

B. Construction of all embankments.

C. Compaction of all subgrade.

D. Fine grading.

E. Rolling and all other work necessary for the completion of the subgrade and slopes.

F. Placement of Bedding Materials.

1.2 RELATED SECTIONS

A. Section 02221: TRENCHING, BEDDING, BACKFILL AND COMPACTION.

B. Section 02115: CLEARING AND GRUBBING

1.3 REFERENCES

A. American Association of State Highway and Transportation Officials (AASHTO):

AASHTO T-180 Moisture-Density Relations of Soils Using a 10-ln Rammer and an 18-inch Drop

Standard Specifications, State of California Department of Transportation.

ASTM D 698-91 Laboratory Compaction Characteristics of Soil Using Standard Effort (12,400 ft-1bf/ft (600kN-m/m)).

1.4 QUALITY ASSURANCE

A. Codes and Standards: Perform excavation work in compliance with applicable requirements of authorities having jurisdiction.

1.5 PROJECT CONDITIONS

A. Site Information: Data in subsurface investigation reports was used for the basis of the design are included in these Contract Documents and are available to the contractor for information only. Conditions are not intended representations or warranties of accuracy or continuity between soil borings. The Owner will not be responsible for interpretations or conclusions drawn from this data by contractor.

B. Existing Utilities: Locate existing underground utilities in areas of excavation work. If utilities are indicated to remain in place, provide adequate means of support and protection during earthwork operations.

(1) Should uncharted, or incorrectly charted, piping or other utilities be encountered during excavation, consult utility owner immediately for directions. Cooperate with Owner and utility companies in keeping respective services and facilities in operation. Repair damaged utilities to satisfaction of utility owner.

(2) Demolish and completely remove from site existing underground utilities indicated to be removed. Coordinate with utility companies for shutoff of services if lines are active.

C. Use of Explosives: Use of explosives is not permitted.

D. Protection of Persons and Property: Barricade open excavations occurring as part of this work and post with warning lights.

1. Operate warning lights as required by authorities having jurisdiction.

2. Protect structures, utilities, sidewalks, pavements, and other facilities from damage caused by settlement, lateral movement, undermining, washout, and other hazards created by earthwork operations.

3. Perform excavation by hand within dripline of large trees to remain. Protect root systems from damage or dryout to the greatest extent possible. Maintain moist condition for root systems and cover exposed roots with moistened burlap.

1.6 DEFINITIONS

A. Unclassified Excavation: Any and all earthen materials encountered, including rocks and boulders smaller than 0.5 cubic yards, during construction.

B. Embankment Fill: Earthwork consisting of embankments, including preparation of area upon which they are to be placed, placing and compacting of approved material, backfill within areas where unsuitable materials have been removed, and

placing and compacting of embankment material in holes, pits and other depressions to lines and grades shown on Drawings. Embankment Fill shall be granular, non-expansive material free of trash, debris, rock less than 3" in diameter, and organics. Prior to placement of the new embankment fill, all vegetation, organic soils, and highly compressible soils shall be removed. The Engineer shall review the exposed subgrade prior to the placement of embankment fill material. The Contractor shall proof roll embankment areas if requested by the Engineer.

C. Rock Excavation: Rock excavation shall consist of igneous, metamorphic, and sedimentary rock and boulders exceeding one cubic yard which cannot be excavated without blasting or the use of rippers equivalent to a Caterpillar D7 with ripper or a Caterpillar 225 track mounted backhoe with "rock teeth".

D. Borrow: Backfill or embankment material which must be acquired from designated borrow areas to make up deficient areas which cannot be completed from excavation within work limits.

E. Proof Rolling: The application of test loads over a subgrade surface by means of a heavy pneumatic-tired vehicle to locate weak areas in subgrade.

F. Subgrade Stabilization: The placement of stabilization material in areas of over-excavation, as replacement of unsuitable insitu material, or in areas of high water table to stabilize the insitu material.

G. Structure Backfill: Earthwork around a buried structure to bring the adjacent surface to the design grade, including preparation of the excavation floor and walls and placing and compacting of approved structure backfill material.

H. Structure Bedding Material: Material as indicated on the construction drawings to be placed under cast-in-place reinforced concrete structure and other indicated structures.

I. Pipe Bedding: Bedding material placed in a trench bottom in preparation for laying a pipe or conduit and shall meet the requirements of Class "B" Bedding as given in the Standard Specifications for the City of Saratoga.

I. Subsurface Drain: Free draining granular material placed in a trench usually with a perforated pipe to drain ground water. Subsurface Drain Material is specified in Section 02410.

J. Imported Structure Backfill: Imported Structural Backfill Material shall be used when suitable on-site materials are not available. Off-site Structural Backfill Materials as necessary to supplement available on-site Structure Backfill must be non-expansive material free of trash, debris and organics and no larger than 3" in any dimension.

L. Aggregate Base Course shall be placed on prepared subgrade as indicated on the Construction Drawings. Aggregate base course is specified in Section 02232.

1.7 CARE AND RESTORATION OF PROPERTY

A. On paved surfaces, the Contractor shall not use or operate tractors, bulldozers, or other power-operated equipment, the treads or wheels of which are so shaped as to cut or otherwise damage such surfaces.

B. All lawns, irrigation systems, paved surfaces, roadways, and structures which have been damaged by the contractor's operations shall be restored to a condition at least equal to that in which they were found immediately prior to the beginning of operations.

C. The restoration of existing property or structures shall be completed as promptly as practicable and shall not be left until the end of the construction period.

PART 2 - PRODUCTS

2.1 MATERIALS

A. Embankment Fill Material shall classify as GW, GP, SW, SP, GC, GM, SC, or SM in accordance with the United Soil Classification System. Embankment Fill Material shall be granular, non-expansive material free of trash, debris, and organics. Material shall consists of 3" minus material having less than 35% passing the No. 200 sieve, a liquid limit less than 30 and a plasticity index less than 15. The onsite sands and gravels are suitable materials. Onsite clays will be expansive in a compacted condition and are not suitable materials under sidewalks or structures.

B. Stabilization material shall meet the gradation of "No. 4 Coarse Aggregate" as specified in Section 703.02 of the California Department of Transportation CALTRANS Standard Specifications Stabilization Material shall meet the following gradation requirements.

Sieve Size	Percentages Passing Designated Sieve Sizes
2 inches	100
1.5 inch	90-100
1 inch	20-55
3/4 inch	0-15
3/8 inch	0-5

C. On-site Structure Backfill Material shall consists of suitable materials developed on the project. To be suitable for use under this classification, backfill shall be

free of frozen lumps, wood, or other organic material, it shall consists of 3” minus material having less than 35% passing the No. 200 sieve, a liquid limit less than 30 and a plasticity index less than 15. If the material contains rock fragments that, in the opinion of the Engineer, will be injurious to the structure, the native material shall not be used and material shall be imported that meets the requirements for imported structure backfill.

D. Structure Bedding Material shall meet the gradation of No. 4 Coarse Aggregate as specified by Section 7.03.02 of the CALTRANS Standard Specifications.

E. Imported Structure Backfill shall meet the requirements of Class I Structure Backfill as specified in Section 703.08 of the CALTRANS Standards Specifications. In addition, this material shall have a liquid limit not exceeding 35 and a plasticity index of not over six when determined in conformity with AASHTO T 89 and T 90, respectively.

IMPORTED STRUCTURE BACKFILL

Sieve Size	Percent Passing
2-inch	100
No. 4	30 to 100
No. 50	10 to 60
No. 200	5 to 20

F. Clean sand shall meet the following gradation requirements:

CLEAN SAND

Sieve Size	Percent Passing
3/8 inch	100
No. 200	0 to 5

G. Subsurface Drain Material Type 1 shall meet the gradation of No. 4 Coarse Aggregate as specified by Section 7.03.02 of the CALTRANS Standard Specifications.

H. Class “B” Pipe Bedding shall be a well-graded crushed stone or slag. When tested by means of laboratory sieves it shall conform to the following requirements: (AASHTO M43, No. 67 gradation).

Sieve Size	Percent Passing
1 inches	100
3/4 inch	90-100
3/8 inch	20-55
No. 4	0-10
No. 8	0-5

When crushed gravel or stone is used, at least 50 percent, by weight, of the particles retained on the No. 4 sieve and above shall have at least two (2) fractured faces.

PART 3 - EXECUTION

3.1 PREPARATION

A. Protect subgrade against freezing temperatures or frost. Provide protective insulating materials as necessary.

B. Provide erosion control measures to prevent erosion or displacement of soil and discharge of soil-bearing water runoff or airborne dust to adjacent properties and walkways. See Section 02400.

C. Prior to placement of new embankment fill, structure backfill, or bedding material all vegetation, organic soils, and highly compressible soils shall be removed. The Engineer shall review the exposed subgrade prior to placement of new embankment fill, structure backfill or bedding material.

D. Prior to placing embankment fill, the area shall be proof rolled to ensure the subgrade has been properly prepared. Any soft spots detected shall be removed to 1.0’ below subgrade and stabilized with Embankment Fill Material at no extra cost. If stabilization deeper that 1.0’ is required and in areas of high water table, refer to subgrade stabilization below.

3.2 EXCAVATION, EMBANKMENT, AND COMPACTION

A. Prior to placing embankment fill, the area shall be proof rolled to ensure the subgrade has been properly prepared. Any soft spots detected shall be removed and stabilized.

B. Excavation operation, the forming of embankment, excess material stockpiles and the shaping of the subgrade, walkways and side slopes shall be in accordance with methods herein specified.

C. When grading occurs around existing trees, the Contractor shall stay 1 foot per caliper inch away from the tree.

D. In excavation operations, and in the formation of embankments, operations shall be so conducted as to provide positive drainage at all times subject to the provisions in the Drawings and Specifications regarding erosion control measures.

E. The Contractor shall satisfy himself of the character of the material to be moved. Rock, if encountered, shall be excavated to a depth of six (6) inches below subgrade, and backfilled with embankment material. When rock excavation is encountered as defined in Part 1 of this specification, the Contractor shall notify the Engineer for field verification.

F. Embankment fill material and structure backfill shall be excess cut material from the site excavation or imported material The material shall be placed in successive horizontal layers not exceeding eight (8) inches in depth (loose measurement) and shall be compacted with suitable compactors to not less than the following percentages of the maximum dry density as determined in accordance with ASTM D 698:

COMPACTION SPECIFICATION TABLE

Location	Cohesive Soils % Max Dry Density	Non-cohesive Soils % Max Rel. Density
Scarified subgrade under an embankment, fill under roads and drainage channels	95%	75%
Embankment under structures	100%	80%
All Other Areas	90%	70%

During compaction, the moisture content of the embankment material shall be controlled to within plus or minus 2 percent of the optimum moisture content determined in accordance with ASTM D 698. For compaction of the embankment material, the contractor shall provide kneading rollers, vibratory sheepsfoot rollers, rubbertired rollers, vibratory rollers or whatever other type of compaction equipment is necessary to achieve the compaction requirements indicated above. The Contractor is advised that drying of the excavated material

may require spreading, disking, or other material may require spreading, disking, or other material handling and rehandling procedures. Whenever the embankment material is either wetted or dried to adjust its moisture content, the material should be tilled or otherwise thoroughly mixed so that the moisture content is uniformly distributed within each layer of soil placed. Mobilizing different types of compaction equipment as required and handling the embankment material to adjust its moisture content will not be basis for any additional compensation to the Contractor beyond the unit prices bid for applicable work items.

H. When embankment is to be superimposed upon undisturbed (natural) soil, the surface shall be scarified to a depth of six (6) inches and compacted to 100% of the maximum dry density as determined in accordance with ASTM D 698. The moisture content of the scarified material shall be adjusted as required to achieve the required compaction. In cut areas, the upper 6 inches shall be scarified and re-compacted to 100% of the maximum dry density as determined in accordance with ASTM D 698.

I. No frozen material shall be placed in embankments, and any material which freezes after being placed in embankment shall not be covered over until it has thawed out and been re-compacted, if necessary, or removed.

J. Excavated areas shall be watered by the contractor as required to prevent the propagation of dust.

K. After completion of embankment construction, topsoil shall be spread in the areas shown on the Drawings and seed, sod or plantings placed in areas designated on the construction drawings.

L. All cast-in-place concrete structures, and retaining walls shall be bedded with structure bedding a minimum of 12” deep under the structure, or as otherwise detailed on the Construction Drawings.

8.3 SUBGRADE STABILIZATION

A. When excessively soft or yielding material is discovered in excess of one foot deep below the subgrade, the Contractor shall notify the Engineer. Upon verification of the unsuitable material, the Engineer may approve excavation and removal of the material and replacement with Stabilization Material. If the soft or yielding materials was caused by the Contractor’s operations, no extra payment will be made.

B. When a high water table is discovered, the Contractor shall notify the Engineer. Upon verification of the high water table, the Engineer may approve over excavation and backfill with Stabilization Material. Subgrade stabilization will not be approved as a substitute for proper dewatering. Should the Contractor over

excavate below or outside the cut limits shown on the drawings, he shall at this own expense backfill the excavation to the proposed subgrade. For this backfill in dry conditions, Embankment Fill Material compacted in accordance with the Compaction Specification Table may be used. In wet conditions, Stabilization Material may be required by the Engineer.

3.4 ACCEPTANCE REQUIREMENTS

A. TOLERANCES

1. Finished surfaces shall be fine graded so they are free-draining and shall be within an allowable tolerance of plus or minus 0.10 foot from the grades shown on the Drawings, minus the thickness of surface course materials or replaced topsoil layer.

2. Regardless of the specified tolerance, all grading and compaction shall be performed in such a manner that finished surfaces are in uniform planes with no abrupt breaks in the surface and the ground is free-draining.

B. COMPACTION

1. All fill material shall be placed to the dry densities listed in the Compaction Specification Table as a minimum.

3.5 EROSION CONTROL

A. Provide erosion control methods in accordance with the Construction Drawings and Section 02400.

3.6 MAINTENANCE

A. Protection of Graded Areas: Protect newly graded areas from traffic and erosion. Keep free of trash and debris.

B. Repair and reestablish grades in settled, eroded, and rutted areas to specified tolerances.

C. Reconditioning Compacted Areas: Where completed compacted areas are disturbed by subsequent construction operations or adverse weather, scarify surface, reshape, and compact to required density prior to further construction.

D. Settling: Where settling is measurable or observable at excavated areas, remove surface (pavement, lawn, or other finish), add backfill material, compact, and replace surface treatment. Restore appearance, quality, and surface treatment. Restore appearance, quality, and condition of surface or finish to match adjacent

work, and eliminate evidence of restoration to greatest extent possible.

3.7 DISPOSAL OF EXCESS AND WASTE MATERIALS

A. Removal from Owner's Property: Remove waste materials, including unacceptable excavated material, trash, and debris, and dispose of it off Owner's property.

END OF SECTION 02210

SECTION 02232 – AGGREGATE BASE COURSE

PART 1 - GENERAL

1.1 DESCRIPTION:

Provide granular base beneath paving.

1.2 RELATED WORK SPECIFIED ELSEWHERE:

A. Earthwork - Section 02200.

B. Asphaltic Paving - Section 02511.

C. Walks - Section 02515.

D. Cast-in-place Concrete - Section 03300.

1.3 COORDINATION:

Coordinate sub-grade preparation with earthwork and utility trades.

PART 2 - PRODUCTS

2.1 GRANULAR BASE MATERIAL:

Aggregate base shall conform to the requirements of Section 26 of the State Standard Specifications and the City Standard Specifications. Recycle rock will not be accepted.

PART 3 - EXECUTION

3.1 SUBGRADE PREPARATION:

A. General: Complete the grading operations and prepare the subgrade for paving. The subgrade is defined as that portion of the road bed upon which the granular base is to be placed. Finish the subgrade to lines, grades and sections shown on the drawings. Remove and replace soft, yielding material, clods or other material with suitable materials. Scarify the upper six inches in both cuts and fills and compact to a uniform density, as determined in accordance with "Compaction Ratio Method, for Selection of Density and Soils and Base Materials in Place."

B. Compaction: Compact the top 6" subgrade to meet the following density requirements:

Soils Plasticity Index	Density Required Optimum Moisture
20 or more	90%
20 or less	95%

C. Rock Subgrade: Loosen encountered rock to a depth of twelve inches below the required subgrade elevation and replace with suitable materials from the excavation. Compact to the density specified above.

D. Maintaining Density: Do not allow the finished subgrade to be disturbed by traffic or other operations. Recompact the subgrade in the manner specified above when the subgrade becomes softened by rain or frost action, or other cause to the extent that it does not have the specified density and moisture content at the time of placement of the next course.

3.2 BASE MATERIAL:

A. General: Install base course in maximum six inch lifts.

3.3 COMPACTION:

"Density Control" method of compaction is to be used, and the following provision shall apply:

A. Density: Compact the base at not less than optimum moisture to provide a density of not less than 95% of standard proctor.

B. Grade Surfaces: Smooth to within plus/minus 0.10 feet established base course elevations. Maintain in smooth compacted condition until final surface is placed.

END OF SECTION 02232

SECTION 02510 WEDGE GRIND/CUT

PART 1: GENERAL

1.1 DESCRIPTION: The work of this section consists of wedge grinding/cut.

PART 2: EXECUTION

2.1 Wedge grid/cut existing pavement to a minimum of 0.17’ (FT) at lip of gutter, face of curb or AC conforms.

2.2 The wedge grind/cut width at lip of gutter or face of curb shall be a minimum of 6 feet and a minimum of 16 feet wide for AC conforms.

2.3 At edge of pavement where new AC Dike will be placed, wedge grid/cut will not be required unless indicated in the Drawings.

2.4 Provide Pedestrian and Traffic Control as necessary to ensure safe public access through the wedge grind/cut area. Contractor to provide barricades with attached “UNEVEN PAVEMENT SURFACE” signs through out the wedge grind/cut limits.

2.5 DISPOSAL: Disposed of unsuitable and excess material offsite at approved facilities.

END OF SECTION 02510

SECTION 02511 HOT-MIXED ASPHALT PAVING

CALTRANS TYPE B ASPHALT CONCRETE

1. Reference to asphalt concrete in this document shall be of Type B Medium, 1/2 inch maximum aggregate size, medium graded, per Section 39 of the Caltrans Standard Specifications for Construction of Local Streets and Roads, May 2006 Edition.

2. Reference to Repaired Failed Street Section (RFSS) in this document shall be of Type B Medium, 3/4 inch maximum aggregate size, medium graded, per Section 39 of the Caltrans Standard Specifications for Construction of Local Streets and Roads, May 2006 Edition.

3. **Paver: Shall have a sonar sensor with a paving leveling ski.**

4. Recycle Asphalt Product (RAP) will not be accepted (virgin mix only).

PART 1) - GENERAL

a) RELATED DOCUMENTS

i) Drawings and general provisions of Contract, including General and Supplementary Conditions and Division 1 Specification Sections, apply to this Section.

b) SUMMARY

i) This Section includes provisions for hot-mixed asphalt paving and base over prepared subbase and all work specified herein, and as shown on the drawings.

B. Related Sections: The following sections are noted as containing requirements that relate to this Section, but may not be limited to this listing:

1. Division 2 - Site Clearing, and Earthwork

c) SUBMITTALS

i) General: Submit the following in accordance with Conditions of Contract and Division 1 Specification Sections.

ii) Material Certificates signed by material producer and Contractor, certifying that each material item complies with or exceeds specified requirements.

1.4 QUALITY ASSURANCE

A. Codes and Standards: Comply with State of California, Department of Transportation, Caltrans Standard Specification (latest edition), and with local regulations if more stringent than herein specified.

1.5 SITE CONDITIONS

A. Weather Limitations: Apply prime and tack coats when ambient temperature is above 50 deg F (10 deg C) and when temperature has not been below 35 deg F (1 deg C) for 12 hours immediately prior to application. Do not apply when base is wet or contains an excess of moisture.

B. Construct hot-mixed asphalt surface course when atmospheric temperature is above 40 deg F (4 deg C) and when base is dry. Base course may be placed when air temperature is above 30 deg F (minus 1 deg C) and rising.

iii) Grade Control: Establish and maintain required lines and elevations.

PART 2) - PRODUCTS

a) MATERIALS

i) General: Use locally available materials and gradations that exhibit a satisfactory record of previous installations.

ii) Base Coarse Aggregate: Sound, angular crushed stone, crushed gravel, or crushed slag, sand, stone, or slag screenings. Comply with Caltrans Standard Specification, Section 26 for Class 2 base.

iii) Herbicide Material: Commercial chemical for weed control, registered by Environmental Protection Agency Provide granular, liquid, or wettable powder form.

D. Available Manufacturers: Subject to compliance with requirements, manufacturers offering products that may be incorporated in the work include, but are not limited to, the following:

1. Ciba-Geigy Corp.
2. Dow Chemical U.S.A.
3. E.I. Du Pont de Nemours & Co., Inc.
4. FMC Corp.
5. Thompson-Hayward Chemical Co.
6. U.S. Borax and Chemical Corp.

E. Prime Coat: Cutback asphalt type AASHTO M82 (ASTM D2027) SC-3, SC-70, or SC-250.

F. Tack Coat: Emulsified asphalt, AASHTO M140 (ASTM D 997) or AASHTO M208 (ASTM D2397) SS-1, SS-1h, CSS-1, or CSS-1h, diluted with one part water to one part emulsified asphalt.

G. Surface Course Aggregate: Crushed stone, crushed gravel, crushed slag and sharp edged natural sand.

H. Asphalt Cement: Conform to AASHTO M226 (ASTM D3381) and to Caltrans Standard Specification, Section 39; provide viscosity grade AR-8000.

K. Header Boards: "Foundation Grade" (Selected from Construction Heart) Redwood as specified in Paragraph 316 "Standard Specifications for Grades of California Redwood Lumber", November 1970 Edition.

L. Pavement Stripes and Pavement Markings: Paint Type, per Section 84 of the Caltrans Standard Specifications for Construction of Local Streets and Roads, May 2006 Edition

M. Pavement Markers: per Section 85 of the Caltrans Standard Specifications for Construction of Local Streets and Roads, May 2006 Edition

2.2 ASPHALT-AGGREGATE MIXTURE

A. Asphalt concrete pavement sections 3 inches thick or less shall be installed in single lift.

B. Asphalt concrete pavement sections greater than 3 inches thick shall be installed in two (2) lifts in conformity with Caltrans' Standard Specifications, Section 39:

1. Base Lift: 1-1/2" minimum, Type "B" asphalt concrete, 3/4" maximum aggregate size, medium graded.
2. Top Lift: 1-1/2" minimum, Type "B" asphalt concrete, 3/4" maximum aggregate size, medium graded.

C. Asphalt Concrete Dike: Type A asphalt concrete, 3/8", and maximum aggregate size.

PART 3) - EXECUTION

a) SURFACE PREPARATION

A. Remove loose material from compacted subbase surface immediately before applying weed control agent.

B. Proof-roll prepared subbase surface to check for unstable areas and areas requiring additional compaction.

C. Notify Contractor of unsatisfactory conditions. Do not begin paving work until deficient subbase areas have been corrected and are ready to receive paving.

D. Base Course: Place and compact aggregate base course to thicknesses required for each section. Compact base course to 95% minimum relative compaction. Comply with requirements of Standard Specification, Chapter 26.

E. Herbicide Treatment: Apply chemical weed control agent in strict compliance with manufacturer's recommended dosages and application instructions. Apply to compacted, dry subbase prior to placement of base course. Extreme care shall be exercised during application that no weed killer is applied to area(s) not to be paved.

F. Prime Coat: Apply at rate of 0.20 to 0.50 gal. per sq. yd., over compacted subgrade. Apply material to penetrate and seal, but not flood, surface. Cure and dry as long as necessary to attain penetration and evaporation of volatile.

G. Tack Coat: Apply to contact surfaces of previously constructed asphalt or Portland cement concrete and surfaces abutting or projecting into hot-mixed asphalt pavement. Distribute at rate of 0.05 to 0.15 gal. per sq. yd. of surface.

H. Allow to dry until at proper condition to receive paving.

I. Exercise care in applying bituminous materials to avoid smearing of adjoining concrete surfaces. Remove and clean damaged surfaces.

J. Installation of Header Boards: Install header boards at all pavement edges not bound by concrete curbs. Provide header boards of size and thickness detailed or noted on the drawings, if no size is indicated; provide 2x4 header boards. Set header board true to lines and grades, staked as detailed. Construct curves with nailed up laminations to required thickness. All butt joints, back joint both sides with 1"x3"x12" strips, nailed through and clinched.

K. Existing Asphaltic Concrete Paving:

1. Repair damage caused by construction operations and restore to condition prior to construction.

2. Restoration may be accomplished by patching defects, resurfacing, completely replacing, or combination of these measures, but measure taken shall be adequate for work of restoration required and shall be subject to the Engineer's approval.

L. Seal Coat: Apply fog seal coat, and when indicated on the drawings, a slurry seal, in accordance with CSS Section 37 to all existing and new asphaltic concrete paving.

1. Mask adjoining surfaces and areas, including curb faces, and take all other necessary precautions as required to prevent over-spray and splatter of the seal coat material on the adjacent surfaces or areas. In the event the precautions taken are not adequate, clean all traces of over-spray and splatter form all surfaces to the satisfaction of the Engineer.

b) PLACING MIX

i) General: Place hot-mixed asphalt mixture on prepared surface, spread, and strike off. Spread mixture at minimum temperature of 225 deg F (107 deg C). Place areas inaccessible to equipment by hand. Place each course to required grade, cross-section, and compacted thickness.

ii) Paver: Shall have a sonar sensor with a paving leveling ski.

iii) Paver Placing: Asphalt pavers shall be self-propelled mechanical spreading and finishing equipment, provided with a screed or strike-off assembly capable of distributing the material to no less than the full width of traffic lane, unless otherwise acceptable to Engineer. After first strip has been placed and rolled, place succeeding strips and extend rolling to overlap previous strips. Complete base course for a section before placing surface course.

iv) Immediately correct surface irregularities in finish course behind paver. Remove excess material forming high spots with shovel or lute.

v) Joints: Make joints between old and new pavements, or between successive days' work, to ensure continuous bond between adjoining work. Construct joints to have same texture, density, and smoothness as other sections of hot-mixed asphalt course. Clean contact surfaces and apply tack coat.

vi) Curbs: Construct curbs over compacted pavement surfaces. Apply a light tack coat unless pavement surface is still tacky and free from dust.

vii) Place curb materials to cross-section indicated or, if not indicated, to local standard shapes, by machine or by hand in wood or metal forms. Tamp hand-placed materials and screed to smooth finish. Remove forms as soon as material has cooled.

c) ROLLING

i) General: Begin rolling when mixture will bear roller weight without excessive displacement.

ii) Compact mixture with hot hand tampers or vibrating plate compactors in areas inaccessible to rollers.

iii) Breakdown Rolling: Accomplish breakdown or initial rolling immediately following rolling of joints and outside edge. Check surface after breakdown rolling and repair displaced areas by loosening and filling, if required, with hot material.

iv) Second Rolling: Follow breakdown rolling as soon as possible, while mixture is hot. Continue second rolling until mixture has been evenly compacted.

v) Finish Rolling: Perform finish rolling while mixture is still warm enough for removal of roller marks. Continue rolling until roller marks are eliminated and course has attained 96 percent laboratory maximum compacted density.

vi) Patching: Remove and replace paving areas mixed with foreign materials and defective areas. Cut out such areas and fill with fresh, hot-mixed asphalt. Compact by rolling to specified surface density and smoothness.

vii) Protection: After final rolling, do not permit vehicular traffic on pavement until it has cooled and hardened.

viii) Erect barricades to protect paving from traffic until mixture has cooled enough not to become marked.

3.4 DIKES

A. Asphalt dikes shall be placed on newly laid asphalt pavement free from dust.

B. Dikes shall be shaped and compacted with an extrusion machine or other equipment capable of shaping and compacting the material to the required cross section.

3.5 TRAFFIC, PARKING STALL AND LANE MARKINGS

A. Cleaning: Sweep and clean surface to eliminate loose material and dust.

B. Remove existing parking stall painting by sand blasting.

C. Striping: Paint Type, per Section 84 of the Caltrans Standard Specifications for Construction of Local Streets and Roads, May 2006 Edition

D. Do not apply traffic and lane marking paint until layout and placement have been verified with Engineer.

E. Apply paint with mechanical equipment to produce uniform straight edges. Apply at manufacturer's recommended rates to provide minimum 12 to 15 mils dry thickness. Use white color for normal striping, unless otherwise noted. Use blue color at handicap facilities.

3.6 WHEEL STOPS

A. General: Secure wheel stops to hot-mixed asphalt surface with not less than two 3/4-inch-diameter galvanized steel dowels embedded in precast concrete at 1/3 points.

3.7 FIELD QUALITY CONTROL

A. General: Testing in-place hot-mixed asphalt courses for compliance with requirements for thickness and surface smoothness may be done by City's testing laboratory. Repair or remove and replace unacceptable paving as directed by Engineer.

B. Thickness: In-place compacted thickness tested in accordance with ASTM D 3549 will not be acceptable if exceeding following allowable variations:

(1) Total Asphalt Concrete Section: Plus or minus 1/4 inch.

C. Surface Smoothness: Test finished surface of each hot-mixed asphalt course for smoothness, using 10-foot straightedge applied parallel with and at right

angles to centerline of paved area. Surfaces will not be acceptable if exceeding the following tolerances for smoothness:

1. Base Course Surface: 1/4 inch.
(2) Wearing Course Surface: 3/16 inch.

D. Check surface areas at intervals as directed by Engineer.

E. Drainage: After completion of paving work, all paving shall be flooded with water, and any resulting "ponds" shall be ringed with chalk. Such hollows shall be corrected with addition of asphalt concrete and rerolling until paving is completely level and free from hollows and high spots.

END OF SECTION 02511

SECTION 02515 WALKS, CURBS, RAMPS AND GUTTERS

PART 1: - GENERAL

DESCRIPTION: The work of this section consists of constructing walks, curbs, ramps and gutters. Class B Portland Cement Concrete (5 sack mix with 1 pint lampblack /cubic yard.

Constructing walks, curbs, ramps and gutters shall conform to the conform to provisions of Section 73 from Caltrans Standard Specifications May 2006

Ramps shall be Caltrans 2006 Case "A" and "G" Ramp. The width of the ramp shall be eight (4) feet wide with raised truncated dome pattern (in line) detectable warning surface. The color shall be armor title dark grey federal color No. 36118

ALTERNATE CONSTRUCTION METHODS: Concrete slabs for walks shall be formed, placed, vibrated, and finished by hand using conventional methods. Concrete curbs or curbs and gutters may be constructed in the same manner, but Contractor has the option of machine placing curbs using the extrusion method or machine placing curb and gutter using the slip-form method.

Measurement and Payment:
The contract price paid per lineal foot for curbs and gutters and square foot for walks, ramps and driveway approaches shall include full compensation for furnishing all labor, materials, tools, equipment and incidentals and for doing all worked involved in construction the curbs and gutters and square foot for walks, ramps and driveway approaches, complete in place, including concrete, aggregate base, excavation, and backfill.

QUALITY ASSURANCE:

A. Contractor / Subcontractor performing concrete work for this section shall have a minimum of five years experience.

B. Construct a five foot (5') square sample of gray sidewalk paving, and a ten foot (10') long section of curb and gutter, to show surface texture, joints, and general appearance of acceptable work will be required. No work shall be performed until the sample has been approved and becomes the standard of comparison for acceptability of all work. The sample may be part of the work required to be placed for the project.

C. Construct a five foot (5') square concrete sample for each color of colored concrete work, to show surface texture, color, and general appearance of acceptable work. No work shall be performed until the sample has been approved and becomes the standard of comparison for acceptability of all work. The sample will be used by the Owner to ensure all colored concrete work is a consistent color. Colored concrete work which the Owner feels

deviates from the approved sample shall be removed and replaced at no additional cost to the Owner.

1.4 SUBMITTALS: As specified in Section 01300.

A. Furnish statement of composition of concrete mix and evidence that mix meets specified quality.

B. Samples of color additive material and mix design

A. Description of machines proposed for concrete extruding or slip-forming.

B. Product Literature for Curing Agents
C. Product literature for Standard and Colored Concrete elastomeric sealants

D. Removable Plastic Expansion Joint Cap Strip

1.5 PROJECT CONDITIONS: Place concrete only when temperatures are above 35 degrees F, unless it is protected from freezing in accordance with ACI Cold Weather concrete provisions.

1.6 RELATED SPECIFICATIONS:

Section 03100 - Concrete Formwork
Section 03200 - Concrete Reinforcement
Section 03300 - Cast-In-Place Concrete
Section 03354 – Integral Colored Concrete

PART 2: - PRODUCTS:

2.1 STRUCTURAL FILL: As specified in Section 02210-Excavation, Embankment, and Compaction.

2.2 CONCRETE: As specified in Division 03300.

2.3 COLORED CONCRETE: Davis Colors, or approved equal

2.4 CONCRETE REINFORCEMENT: As specified in Division 03200

2.5 EXPANSION DOWELS: Smooth steel dowels conforming to AASHTO M 183 with gage metal sleeves. Size, number and spacing shall be as specified in the contract drawings.

2.6 REMOVABLE PLASTIC EXPANSION JOINT CAPS: Pre-molded plastic 1/2" expansion joint material ½" Dia plastic cap conforming AASHTO M 213.

2.7 EXPANSION JOINT MATERIAL: Asphalt Impregnated Cellulose Fiber, ASTM-D1751;

2.8 EXPANSION JOINT SEALANTS: Sonneborn NP 2 or approved equal

2.9 CURING COMPOUND: ASTM C309-81, Type 1 for Gray Concrete and Manufacture's Approved Colored Curing Compound for Colored Concrete Work;

2.10 CURING MATERIAL: Waterproof paper, polyethylene sheet, clean burlap, cotton mats, or other approved material, free of substances that may cause stain or discoloration.

PART 3: - EXECUTION

3.1 SAWCUTTING: All concrete removal shall be to a saw joint unless it can be demonstrated that an existing joint is of such character that removal can be accomplished to a neat line. Sawcutting shall be at a depth equal to at least 1/2 the depth of the concrete. In no case shall a piece of concrete curb and gutter or crosspan be left which is closer than five feet to the nearest control joint.

3.2 PREPARATION OF SUBGRADE:

A. Excavate to required depth and to a width equal to the width of the concrete to be placed plus one foot (1') beyond the outer edge of the concrete to be placed.

B. In fill areas, the material shall be placed for the full width of the concrete to be placed plus two feet (2') beyond the outer edge of the concrete to be placed and shall slope to the existing ground on a two-to-one (2:1) slope, or as specified on the contract drawings.

C. Place a minimum of six inches of Class VI roadbase material under all concrete sidewalks.

D. Remove soft, yielding material and replace with select fill. Compact to a density of not less than 95 percent of the maximum density as determined by AASHTO T99-81,Method D.

E. If tree roots are encountered in the areas to receive concrete, the root shall be cut a distance of 12" behind the area to be replaced. Prior to cutting the tree root,

3.3 MAINTENANCE OF SUBGRADE: Maintain subgrade in a compacted condition until concrete is placed.

3.4 FORMS: As specified in Division 03100 and the following:

A. Metal or uniform warp-free lumber of a height not less than the designed depth of the adjacent concrete, coated with form release agent.

B. Stake securely, and grade forms to ensure straight, plumb alignments. Flexible forms shall be used on all curves having a radii of less than 200 feet. Staking shall have no less than three (3) staking points per ten (10) feet of length with means for locking the form to the stake

C. Forms with greater height than the thickness of the concrete specified may be used if the upper edge is set accurately to line and grade and the subgrade is excavated to meet the bottom edge of the forms in a slope not steeper than one inch (1) vertical to four (4)inches horizontal. The extra cost for the concrete shall be furnished at no additional cost to the City.

D. Under no condition shall the forms be blocked up with stones, broken concrete, wood or similar materials

E. Obtain approval of alignment and grade before placing concrete.

3.6 PLACING: Place concrete on moistened subgrade monolithically between construction joints. Deposit to full depth in one operation. Consolidate immediately. After depositing concrete, screed and darby or bullfloat.

SLAB FINISHING: After darbying or bullfloating, stop finishing until bleeding has ceased and until concrete can contain foot pressure with only about 1/4-inch indentation. Edge and joint, then float the slab. After floating, use steel trowel to density surface, then broom slab perpendicular to line of traffic.

CURING/WEATHER PROTECTION:

The Contractor shall apply curing compound immediately after finishing the concrete surface.

Curing compound shall be applied at the rate as recommended by the manufacturer.

The Contractor shall provide for weather protection on the concrete per the requirements of the ACI Cold weather concrete practice manual.

Any concrete surface deformation or discoloration's caused by weather protection equipment shall be removed and replaced by the Contractor at no additional cost to the Owner.

3.9 JOINTS: Construct all joints true to line with faces perpendicular to surface.

A. Isolation Joints: Separate walks from walls, curbs, stairways, and other structures, using expansion joint fillers.

B. Contraction (Control) Joints: Space walk joints at intervals depicted in the contract drawings. If the joint spacing is not specified, sidewalk joints shall be spaced about equal to width of the walks, and space curb and gutter joints not over 12 feet 6 inches on center, and align them with sidewalk joints. Contraction joints may be either sawed or tooled.

1. Sawed: Cut with a power saw fitted with an abrasive or diamond blade, to a depth of one-fourth the walk depth, and the entire width of the slab, within 4 to 12 hours after walk has been placed and finished.

2. Tooled: Form plane of weakness by inserting and later removing a metal divider, or by cutting one quarter to one third depth with a suitable tool when concrete is plastic. Finish all grooves with and edge or a groover.

C. Expansion Joints: Construct joints as specified in the contract drawings or as follows:

1. Place expansion joint material to the full width and depth of the walk, driveway, or curb and gutter, as indicated on the Contract drawings or at least once every fifty feet (50') or as directed by the City.

2. Expansion joints shall be placed between an attached sidewalk and the curb and gutter; where the walk is in a confined area such as between a retaining or foundation wall; between concrete sidewalks and any fixed structure; and any special condition as specified by the City

3. If joint spacing for the curb and gutter is not specified in the contract drawings, space walk joints at intervals about equal to width or walk. Space curb and gutter joints not over 12 feet 6 inches on center, and align them with sidewalk joints.

4. All expansion joints in concrete sidewalks and curb and gutter shall have expansion dowels. Dowels shall be smooth, ¾" diameter X 12" long, with approved metal expansion caps. Dowels shall be placed at 2'-0" on center unless otherwise depicted in the contract documents.

5. After concrete has cured, all expansion joints shall be caulked and sealed in accordance with the manufacture's recommendations. Properly protect sealed joints until the product is cured.

3.9 FORM REMOVAL: Remove forms within 24 hours after concrete placement. Repair minor defects with mortar. Plastering will not be permitted on exposed faces.

3.10 FIELD QUALITY CONTROL:

A. Horizontal Surfaces shall not vary more than 1/8 inch when tested with a 10-foot straight edge.

B. Vertical faces shall not vary more than ¼ inch when tested with a 10' straight edge.

C. All tooled joints and edges shall be straight and clean.

D. Colored concrete work shall be compared to the sample panel to ensure proper color.

E. Expansion joint sealants shall be uniformly applied without surface defects such as bubbles or jagged edges.

F. The Contractor shall provide barricades for wet concrete work to prevent public or other construction equipment from damaging the uncured surface.

3.11 CONCRETE TESTS: Contractor shall notify the City 24 hours prior to placement to schedule testing. Any failed tests shall be paid for by the Contractor in accordance to ARTICLE 2B - Special Requirements.

3.12 CONCRETE MARKING: All new concrete shall have the name of the contractor and the year of construction (only) impressed therein using block letters not less than one inch (1”) height and one quarter inch (1/4”) deep. One impression shall be made at each end of the concrete pour and at intervals of not more than fifty feet (50’).

3.13 CLEAN-UP: Upon completion of the work, remove all debris, concrete splatter, and excess materials and leave area in a neat, clean, acceptable condition.

END OF SECTION 02515

SECTION 03100 CONCRETE FORMWORK

PART 1 - GENERAL

1.1 DESCRIPTION

A. This section shall apply to all concrete formwork for the project.

1.2 SECTION INCLUDES

A. Formwork for cast-in-place concrete, with shoring, bracing and anchorage.

B. Openings for other affected work.

C. Form accessories.

D. Stripping forms.

1.3 RELATED SECTIONS

A. Section 02515 WALKS, CURBS, AND GUTTERS

B. Section 03200 CONCRETE REINFORCEMENT

C. Section 03300 CAST-IN-PLACE CONCRETE

1.4 REFERENCES

A. ACI 301 Specifications for Structural Concrete for Buildings.

B. ACI 347 Recommended Practice for Concrete Formwork.

C. ACI 306R Cold Weather Concreting

D. PS 1 Construction and Industrial Plywood.

1.5 SYSTEM DESCRIPTION

A. Design, engineer and construct framework, shoring, and bracing to meet design and code requirements, so that resultant concrete conforms to required shapes, lines and dimensions.

1.6 QUALITY ASSURANCE

A. Construct and erect concrete formwork in accordance with ACI 301 and 347.

1.7 SUBMITTALS

A. As specified in Section 01300

PART 2 - PRODUCTS

2.1 FORM MATERIALS

A. Plywood: PS-1, HDO grade, Class I.

B. Glass Fiber Fabric Reinforced Plastic Forms: Matched tight fitting, stiffened to support weight of concrete without deflection detrimental to structural tolerances and appearance of finished concrete surface.

C. High Density Masonite Forms: Matched tight fitting, stiffened to support weight of concrete without deflection detrimental to structural tolerances and appearance of finished concrete surface.

2.2 FORMWORK ACCESSORIES

A. Form Ties: Snap-off metal of fixed length; one-inch break back dimension, free of defects that will leave holes no larger than one-inch diameter in concrete surface.

B. Form Release Agent: Colorless material which will not stain concrete or absorb moisture, or impair natural bonding or color characteristics of coating intended for use on concrete.

C. Fillets for Chamfered Corners: Wood strips or Rigid plastic type; 3/4 x 3/4 inch size unless noted otherwise; maximum possible lengths.

D. Nails, Spikes, Lag Bolts, Through Bolts, Anchorages: Sized as required, of strength and character to maintain formwork in place while placing concrete.

PART 3 - EXECUTION

3.1 INSPECTION

A. Verify lines, levels and measurements before proceeding with formwork.

3.2 PREPARATION

A. Earth forms not permitted except as depicted on the drawings for below grade cutoff walls.

B. Minimize form joints. Symmetrically align joints and make watertight to prevent leakage of mortar.

C. Arrange and assemble formwork to permit stripping, so that concrete is not damaged during its removal.

Arrange forms to allow stripping without removal of principal shores, where required to remain in place.

3.3 ERECTION

A. Provide bracing to ensure stability of formwork. Strengthen formwork liable to be overstressed by construction loads.

B. Construct formwork to maintain tolerances in accordance with ACI 301

C. Provide 3/4-inch chamfer strips at all exposed edges and as shown on Drawings.

D. Areas of formwork requiring horizontal curvature shall have chord dimensions no greater than 2 feet.

3.4 APPLICATION OF FORM RELEASE AGENT

A. Apply form release agent on formwork in accordance with manufacturer's instructions. Apply prior to placing reinforcing steel, anchoring devices, and embedded items.

B. Do not apply form release agent where concrete surfaces are scheduled to receive applied coverings or special finishes which may be affected by agent. Soak contact surfaces of untreated forms with clean water. Keep surfaces wet prior to placing concrete.

3.5 INSERTS, EMBEDDED PARTS, AND OPENINGS

A. Provide formed openings where required for work embedded in or passing through concrete.

B. Coordinate work of other Sections in forming and setting openings, slots, recesses, sleeves, bolts, anchors, and other inserts.

C. Install accessories in accordance with manufacturer's instructions, level and plumb. Ensure items are not disturbed during concrete placement. Install water-stops in locations as shown on the Drawings. Refer to Section 03250 for Waterstop Requirements.

3.6 FORM REMOVAL

A. Notify Engineer prior to removing formwork.

B. Do not remove forms and shoring until concrete has sufficient strength to support its own weight, and construction and design loads which may be imposed upon it. Concrete shall not be backfilled or loaded until the concrete has obtained 80% of the design strength.

C. Remove formwork progressively so no unbalanced loads are imposed on structure.

D. Do not damage concrete surfaces during form removal.

Formwork for integrally colored concrete shall be stripped at a consistent time interval after the pour. A variation of +/-2 hours in the time interval between completion of a pour and form stripping shall be permitted.

Weather protection, if required, shall be installed such that the concrete surface shall not be damaged or discolored. Any areas damage or discoloration shall be removed if requested by the Engineer.

3.7 CLEANING

A. Clean forms to remove foreign matter as erection proceeds.

B. Ensure that water and debris drain to exterior through clean-out ports.

During cold weather, remove ice and snow from forms. Do not use de-icing salts. Do not use water to clean out completed forms, unless formwork and construction proceed within heated enclosure. Use compressed air to remove foreign matter.

END OF SECTION 03100

SECTION 03250 CONCRETE ACCESSORIES

PART 1 - GENERAL

1.1 DESCRIPTION

A. Work Included: Work consists of furnishing all labor, material and equipment necessary to install waterstops, expansion joint material, and joint caulking material.

1.2 RELATED SECTIONS

SECTION 03300: Cast-in-Place Concrete

1.3 REFERENCES

CRD-C572 Corps of Engineers Specification for Polyvinyl Chloride Waterstops

ASTM D1752-84 Specification for Preformed Sponge Rubber and Cork Expansion Joint Filler for Concrete Paving and Structural Construction

ASTM D1751-83 Specification for Preformed Expansion Joint Fillers for Concrete Paving and Structural Construction (Nonextruding and Resilient Bitaminous Types)

ASTM C-920-87 Specification for Elastomeric Joint Sealers

1.4 SUBMITTALS

A.. Submit a statement confirming use of specified products or product literature for alternative products.

PART 2 - PRODUCTS

2.1 POLYVINYL CHLORIDE (PVC) WATERSTOPS

A. All materials shall comply with the requirements of CRD-C572 Corps of Engineers specification for Polyvinyl Chloride Waterstops.

The specific waterstop intended for use on this project is the Type 4B waterstop manufactured by Horn/Dura Joint, or equal.

Sales Representative:

Pro Coat Systems, Inc.
5775 Stapleton Drive North, S-200
Denver, Colorado 80216
303-322-9009

2.2 ALTERNATIVE WATERSTOPS AT NON-EXPANSION JOINTS

Expansion Joint Fillers. The sales representative for RX-101-T CETCO Bentonite waterstop is Pro Coat System, Inc. as shown above.

2.3 EXPANSION JOINT MATERIAL

A. Expansion Joint Material shall meet the requirements of ASTM D1751-83 for all expansion joint used in flatwork, with premanufactured removable plastic caps

2.4 EXPANSION JOINT SEALANT MATERIAL

All Expansion Joints shall be sealed shall be sealed unless otherwise indicated on the contract drawings, or as approved by the Engineer. The specific joint sealant material intended for use for crack control joints is Sikaflex 1CSL or 2 CSL at the option of the contractor, and applied in accordance with the manufacturer's recommendations. Joints may be required to be primed with Sika 429 or backed with backer rod prior to the installation of the joint sealant.

Closed cell backer rod 1/2" thick shall be inserted in crack control joints a minimum of 24 hours before installing the control joint resin. The acceptability of an alternative Expansion Joint Sealant Material shall be determined during the shop drawing phase.

PART 3 - EXECUTION

3.1 WATERSTOP INSTALLATION

Waterstops shall be furnished full length for each straight portion of the joint, without field splices. Field splices shall have a full size tensile strength of 100 pounds per inch of width. Waterstops, when being installed, shall be cut and spliced at changes in direction as may be necessary to avoid buckling or distortion of the web or flange. If, after placing concrete, waterstops are substantially out of position or chape, the surrounding concrete shall be removed, the waterstop reset or replaced if damaged, and the concrete replaced at the Contractor's expense.

RX-101-T CETCO Bentonite waterstops, if used, shall be installed per the

manufacturers recommendations for installation.

3.2 EXPANSION JOINT MATERIAL INSTALLATION

A. Install Expansion Joint Material as shown on the Construction Drawings.

3.3 EXPANSION JOINT SEALANT INSTALLATION

A. Apply expansion joint sealant material when ambient air temperature is between 40 - 100 degrees F.

B. Pour joint sealant into joint slot in one direction and allow sealant to flow and level out as necessary.

END OF SECTION 03250

CITY OF SARATOGA

GENERAL CONSTRUCTION SPECIFICATIONS

1. Construction work and operations shall conform to the prevailing State of California Standard Specifications 2006, supplemented by special provisions required by the City of Saratoga Engineer's Office. The performance and completion of all work must be to the satisfaction of the City Engineer.

2. Construction details shall be in accordance with provision of the current City of Saratoga Standard Details as appropriate. In the event of conflict, the matter shall be resolved by the City Engineer.

3. Contractor shall provide adequate dust control as required by the City Engineer.

4. Accurate verification as to size, location and depth of existing underground conduits or facilities shall be the individual contractors responsibility Plan locations are approximate and for general information only. Contractors shall contact utility companies for exact locations of utilities.

5. Concrete used for structural purposes shall be Class "A" (6 sack per c.y.) as specified in the State Standard Specifications. Concrete placed must develop a minimum strength factor of 2200 p.s.i. in a seven day period and 3000 p.s.i. in 28 days.

6. Portland Cement Concrete (P.C.C.) shall conform to Section 90 of the State of California Standard Specifications, May 2006 and shall be designated by class as follows:
7. Class A- 6 sack mix with a minimum compressive strength of 3000 p.s.i. at 28 days
8. Class B- 5 sack mix with a minimum compressive strength of 2500 p.s.i. at 28 days

9. All exposed concrete such as used in sidewalks, curb and gutters, etc., shall contain 1 pint of lampblack per cubic yard.

10. Asphalt concrete (A.C.) shall be Type B conforming to Section 39 of the State of California Standard Specifications, May 2006. Aggregate for asphaltic concrete shall be ½" maximum medium grade or as specifically approved by the City Engineer. Cross sections of A.C 4" or greater in thickness shall be placed in multiple lifts of not more than 4" thickness. ½" median, class B, Prime oil, SC70 Seal oil, SS1H.

11. Reinforced concrete pipe (R.C.P.) for storm drains shall conform to American Society for testing and Materials (A.S.T.M.) C76 and shall be Class II, III or Class IV as specified.

12. Street pavements shall be designed on the basis of the R-Value, Traffic Index method, as shown in the State of California, Division of Highway Planning Manual, Part 7. Minimum standard pavement sections are shown on Street Standard Drawings, No's. 16 to 21. These minimum standards may be used only where the design method does not require a thicker structural section.

13. Curb drop inlets on streets with a slope greater than 6% shall be designed for each particular location. Inlets on streets with a slope of 6% or less shall use the standard design shown on sheet 7 of the street standard drawings.

14. Weakened plane joints may be formed or saw cut but in any case must be to 1/3 of depth of the depth of the concrete section. Formed joints may be accomplished by inspection of a thin (1/4" or less in thickness) sheet of steel, plastic or other suitable material to the proper depth in work able concrete. This wedge should not be removed until the concrete has "set". The concrete on both sides of this wedge shall be finished with a ¼" radius edge.

15. Encroachment permits: Encroachment permits shall be secured from the Santa Clara County Flood Control and Water District in cases where needed. Encroachment permits shall be secured from Caltrans where needed.

16. Contractors or the Developer must notify the Public Works Department before beginning any of the activities listed below. Failure to do so may provide cause for rejection of the work done and the necessity for either; 1.) removing and redoing the work; 2.) special testing such as coring, etc. 3.) a long- term performance bond or 4.) all or any of the above. The critical stages include:

    a. Commencement of work
    b. Beginning cut or fill
    c. Completion of excavation and/or subgrade
    d. Placement of aggregate base rock
    e. Application of prime coat or track coat
    f. Placement of Portland cement concrete in any structure
    g. Placement of asphalt concrete or other roadway material
    h. Completion of any drainage structure
    i. Backfill of any trench
    j. Placement of any structure or roadway over a backfill trench
    k. Completion of a project

17. The city requires a minimum of 24 hours advance notice for general inspection, 48 hours for asphalt concrete construction.

18. The Contractor and/or his authorized representative must submit written request for final inspection and acceptance. Such requests shall be directed to the City of Saratoga Engineering Dept., 13777 Fruitvale Avenue, Saratoga.

19. Routes used by construction traffic to be approved by City Engineer.

20. Field Engineer: Contractors or their engineer shall designate or provide a Field Engineer to act as a liaison with the contractors, subcontract and the City with regard to construction activities. Name(s) and phone number(s) of the individual(s) designated as Field Engineer shall be provided to the City and to all contractors and subcontractors working on the job. All questions as to the meaning and intent of the plans should be taken to the Field Engineer.

Construction work and operations shall conform to the prevailing State of California Standard Specifications 2006, supplemented by special provisions required by the City of Saratoga Engineer's Office. The performance and completion of all work must be to the satisfaction of the City Engineer.

END OF SECTION: CITY OF SARATOGA DETAILS GENERAL CONSTRUCTION SPECIFICATIONS

APPENDIX A

LOCATION MAP & LIMITS OF PROJECT

CONSTRUCTION DETAILS

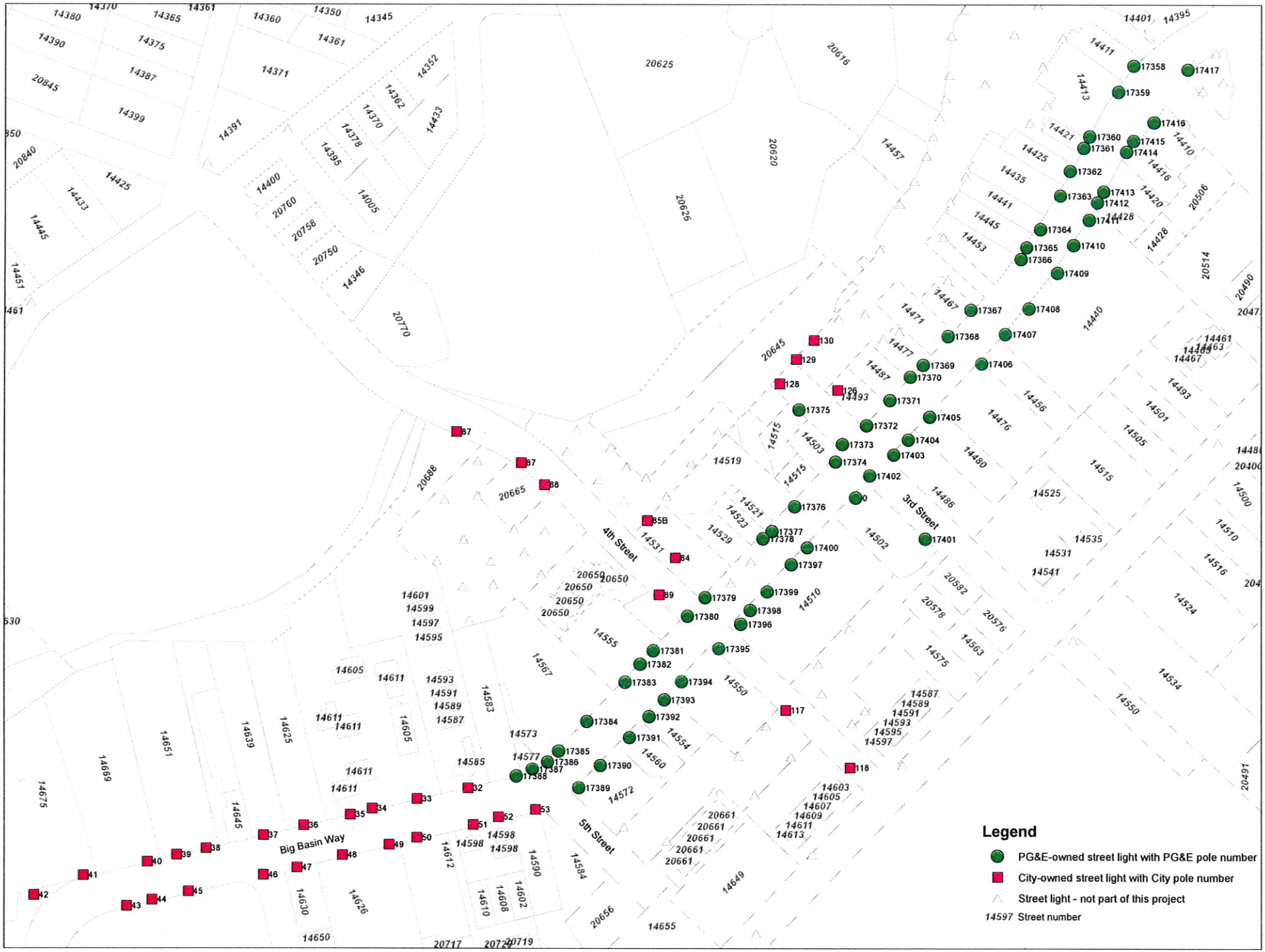
Legend
PG&E-owned street light with PG&E pole number
City-owned street light with City pole number
Street light - not part of this project
14597 Street number
Big Basin Way
4th Street
5th Street
3rd Street

"WARNING: Confidential, Proprietary Information

This document contains confidential, proprietary information that is the sole property of Pacific Gas and Electric Company (PG&E) and is intended for use only by authorized PG&E employees and agents.

Copyright Pacific Gas and Electric Company 2011"

PACIFIC GAS & ELECTRIC COMPANY
DE ANZA DIVISION
SANTA CLARA COUNTY

ELECTRIC DISTRIBUTION MAP
SCALE 1" = 102' ZONE 3

DRAWN JPR6
CIRCUIT MAP I13A
STREET LIGHT MAP

DATE PRINTED 9/26/11

I1309
3473-B1

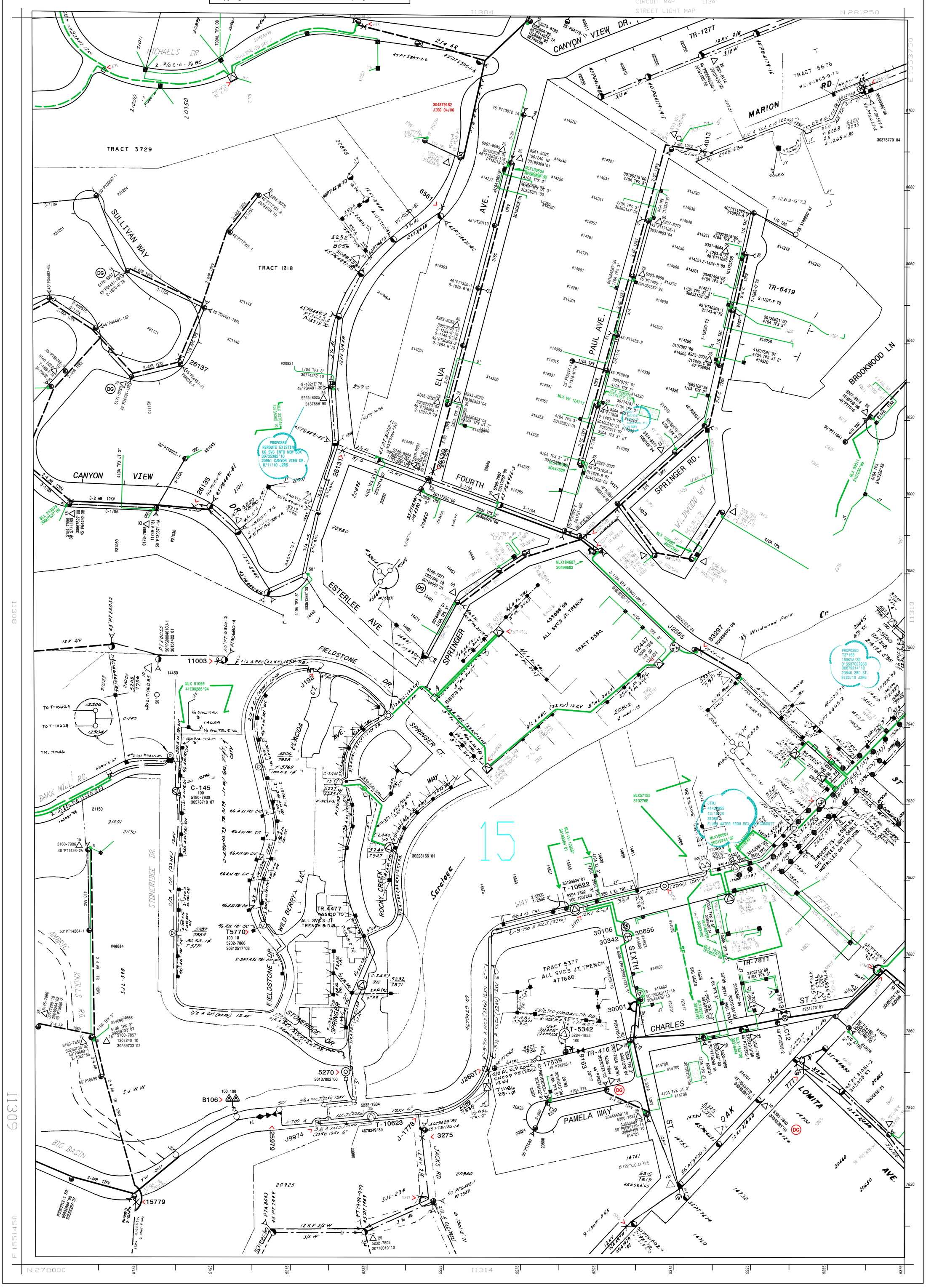

PACIFIC GAS & ELECTRIC COMPANY
DE ANZA DIVISION
SANTA CLARA COUNTY

"WARNING: Confidential, Proprietary Information

This document contains confidential, proprietary information that is the sole property of Pacific Gas and Electric Company (PG&E) and is intended for use only by authorized PG&E employees and agents.

Copyright Pacific Gas and Electric Company 2011"

ELECTRIC DISTRIBUTION MAP
SCALE 1" = 102' ZONE 3

DRAWN J2R6
CIRCUIT MAP I13A
STREET LIGHT MAP

DATE PRINTED 11/15/2011

I1310
3473-B2

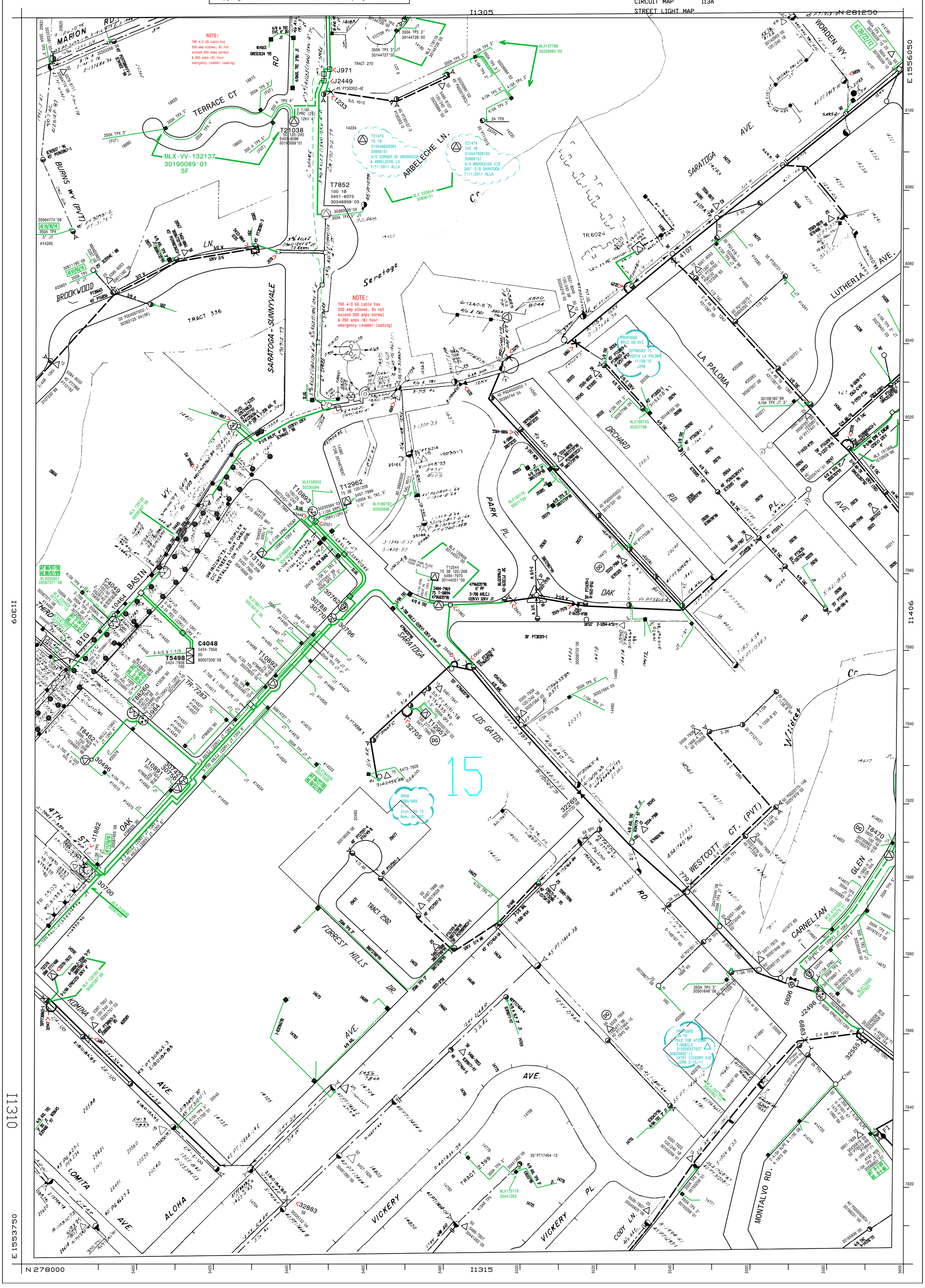

TYPICAL

EXISTING STREET LIGHT POLE AND LIGHT FIXTURE

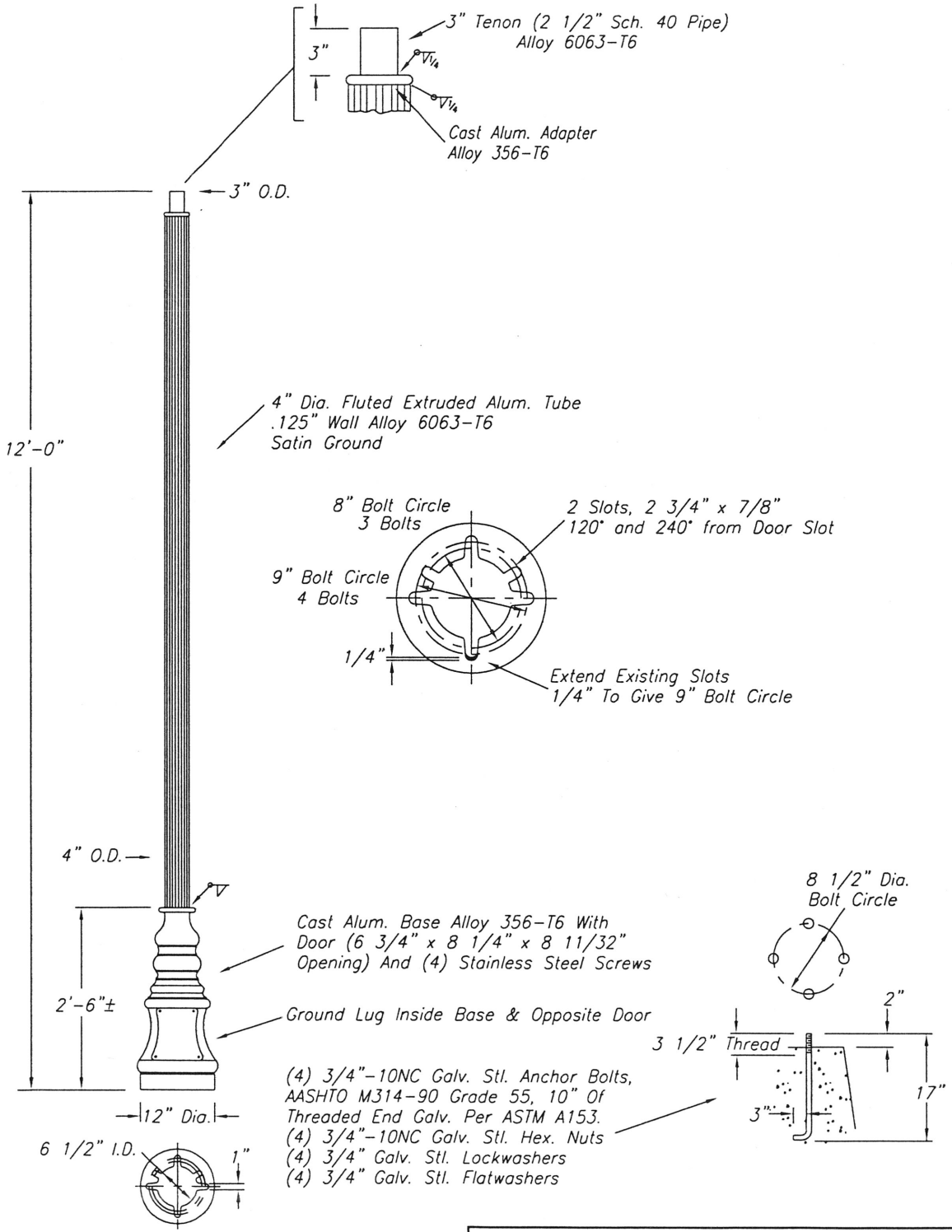

B17828

WARNING: DO NOT INSTALL LIGHTING POLES WITHOUT LUMINAIRES

NO.	REVISIONS	DATE

hapco
A Kearney-National Company

TITLE PEDESTAL POLES	
CUSTOMER City of Saratoga	
SCALE 16	DATE 5/1/92
BY LW	DWG. NO. B17828
CHK'D	

Ordering Guide:

C6263A: LUMINAIRE - V151AB3R3KL30 W/ Dimming Module

LED MODULE SPECIFICATIONS:
- 120-277 VAC. 50/60Hz AUTO SENSING.
- 60,000 HOURS @ 70% LUMEN MAINTENANCE.
- 40 TOTAL LEDS (66 lumens/watt ea).
- 4 CAST ALUMINUM HEAT SINKS.
- 70 COLOR RENDERING INDEX (CRI)
- 3000K COLOR TEMPERATURE (CCT) NOMINAL.

Type III Configuration

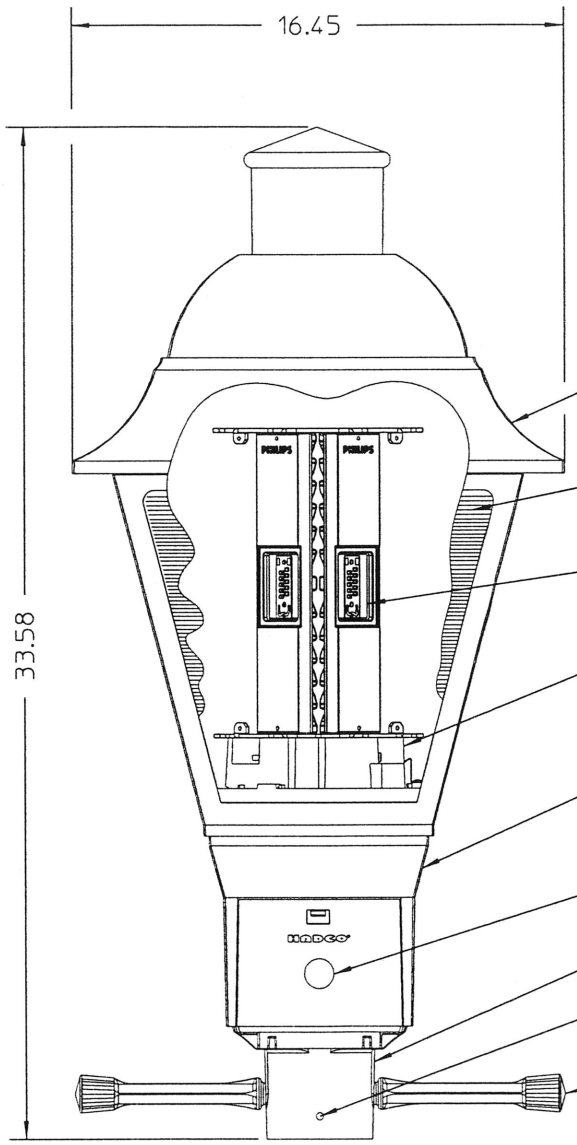

Color:
Black

HINGED ROOF:
DIE-CAST ALUMINUM
#360 ALLOY W/
TOOL-LESS ENTRY

PANELS: REFRACTIVE.
INJECTION MOLDED.
CLEAR ACRYLIC.
TYPE III OPTICS

LUMILOCK LED MODULE.
IP66 RATED

DRIVER COVER:
DIE-CAST ALUMINUM
#360 ALLOY W/
TOOL-LESS ENTRY

DRIVER ENCLOSURE:
DIE-CAST ALUMINUM
#360 ALLOY W/ HINGED
TOOL-LESS ENTRY
ACCESS DOOR

PHOTO CONTROL:
TWIST-LOCK RECEPTACLE
(eye by others)

SLIP FITTER: 3" I.D.

FASTENERS:
STAINLESS STEEL

LADDER REST:
CAST ALUMINUM
#356HM ALLOY

Lumilock Assembly

Scale 1:4

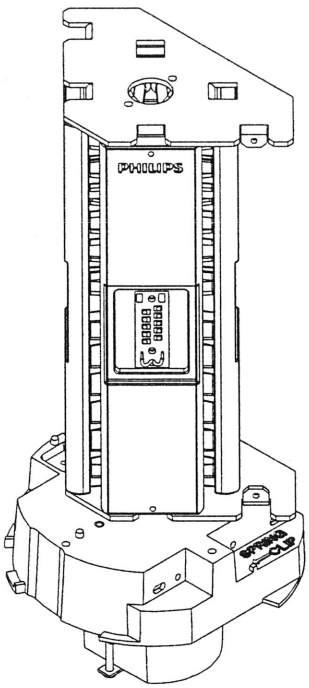

Dimming Module

Scale 1:2

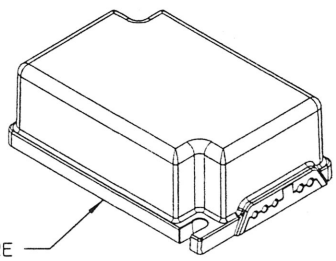

DIMMING MODULE:
LOCATED IN
DRIVER ENCLOSURE
2.13" WD x 3.15" LG
x 1.06" THK

Full Specification Fixture Drawing

NOTICE:
THIS DRAWING IS FOR REFERENCE ONLY. CHECK FOR LATEST REVISION PRIOR TO ORDERING

PHILIPS HADCO

100 Craftway Drive
Littlestown, Pa 17340
Phone 717-359-7131
Fax 717-359-9515
www.hadco.com

JOB NAME:	REP. TERRITORY:
City of Saratoga – Village Street	03

CONFIDENTIAL:
This drawing is confidential and proprietary to Philips Hadco and may not be reproduced without the express written consent of Philips Hadco. Any use hereof or of any of the information or detail herein shall be for the sole benefit of Philips Hadco.

PRODUCT APPROVALS		SCALE:	DATE:	DRAWN BY:	DRAWING NUMBER:
HADCO	EJH	1:6	10/15/11	CMG	C6263-DWG06
CUST.		REP: ALR		REV: A	PCN: 11-127
				BY: .	DATE: .

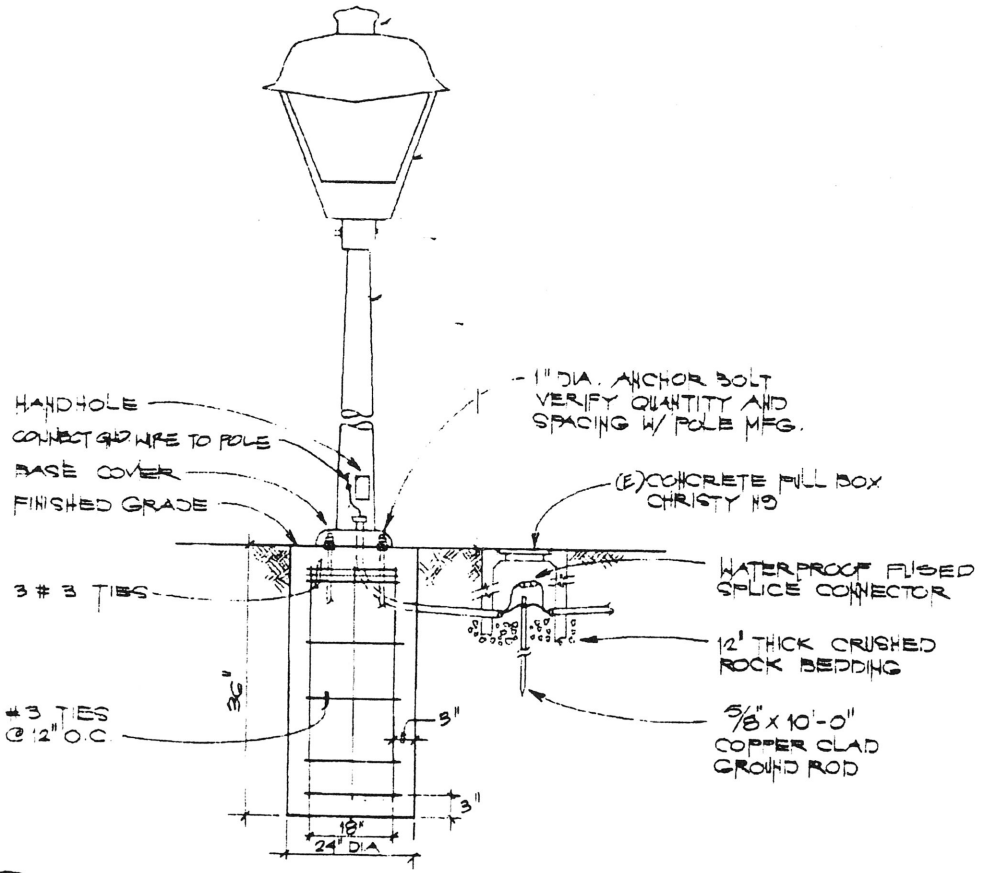

ELECTROLIER MOUNTING DETAIL

NTS

Designed by	Approved by	Date	File name	Scale	Sheet 1 of 1
JJ	MN	JULY 2008		NO SCALE	

CITY OF SARATOGA

STANDARD DRAWING

NOTES

1. Residential sidewalk shall be min. 4' wide, commercial 6' min. width in commercial and proffesional and administrative zones
2. Provide construction joints where curb and sidewalk abut
3. Wheel chair ramps to be located at either or both returns or center of corner as directed. See sheet 10 for ramp detail.
4. Weakened plane joints to be 1 1/2" deep min.

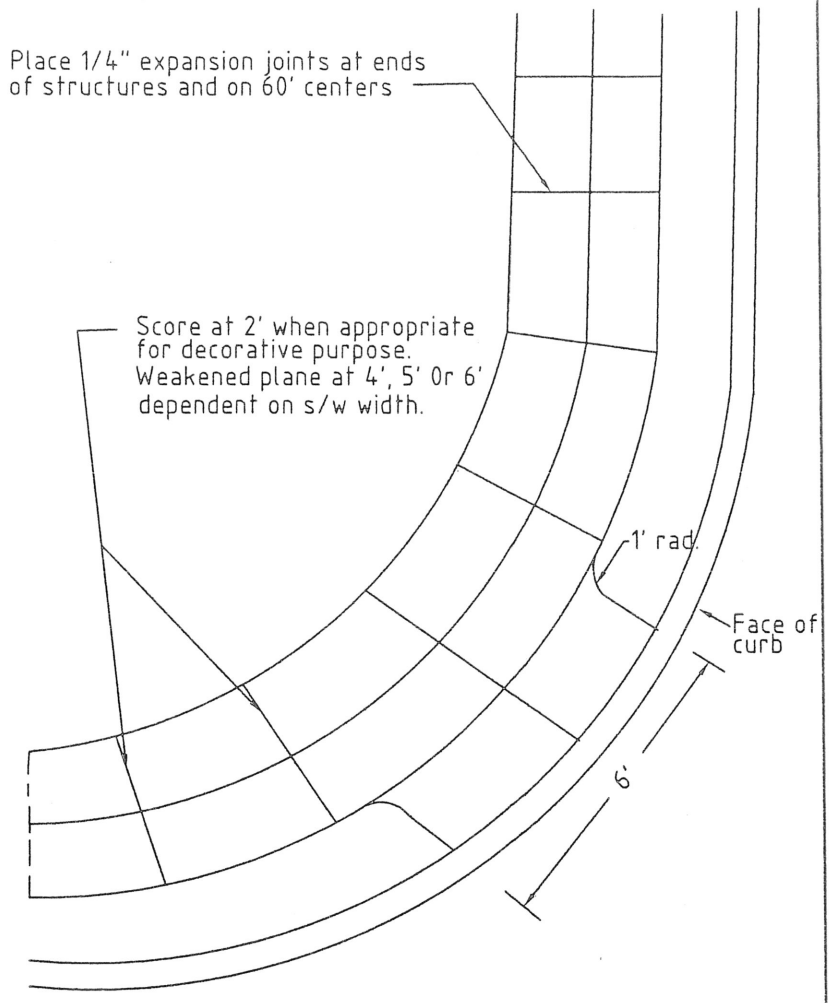

PLAN
STANDARD SECTION

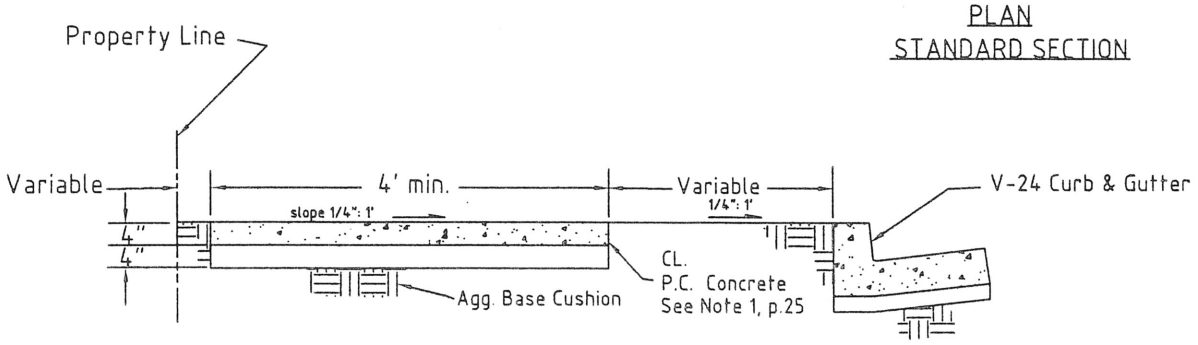

STANDARD SECTION

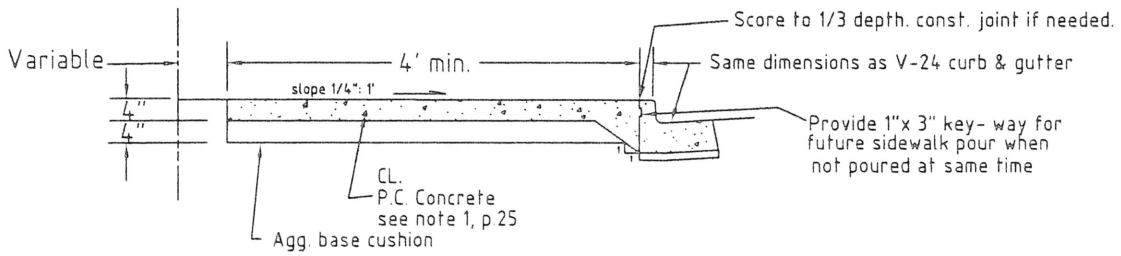

MONOLITHIC SECTION

Designed by	Approved by	Date	File name	Scale	Sheet 1 of 1
E.N.	I.H.	JULY 2003		NO SCALE	

CITY OF SARATOGA	STANDARD DRAWING STANDARD CONCRETE SIDEWALK

City of Saratoga

Additional Encroachment Permit Conditions
Temporary Plating of Roadway Excavations

When using temporary steel plating to cover open excavations within the City of Saratoga, the following must be performed:

1. The existing A/C pavement must be milled to a depth of 3/4"-1" around the periphery of the excavation, so as to accommodate and "countersink" the steel plate.

2. Once the plate is in place, any high lips and/or edges between A/C and steel plate should be smoothed with A/C patch.

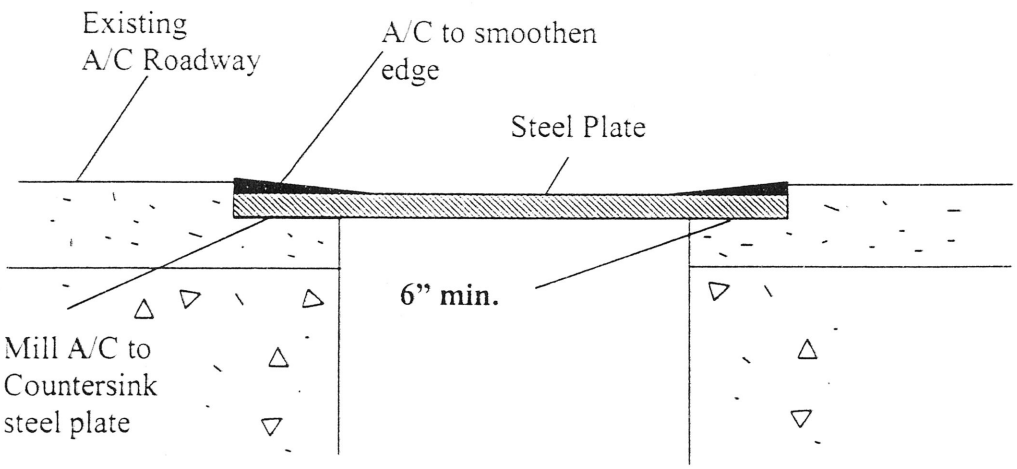

Cross Section
No Scale

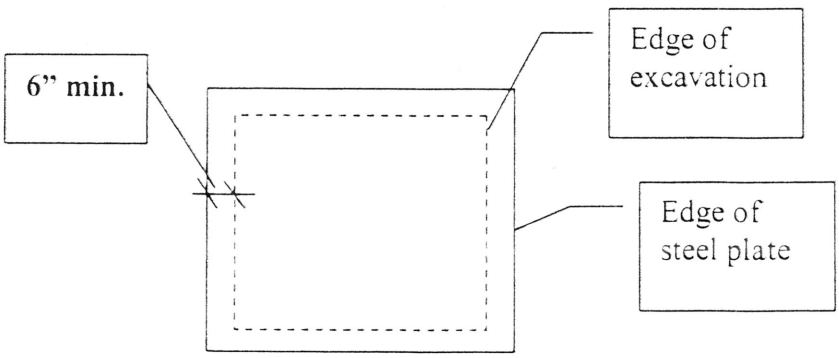

Plan View
No Scale

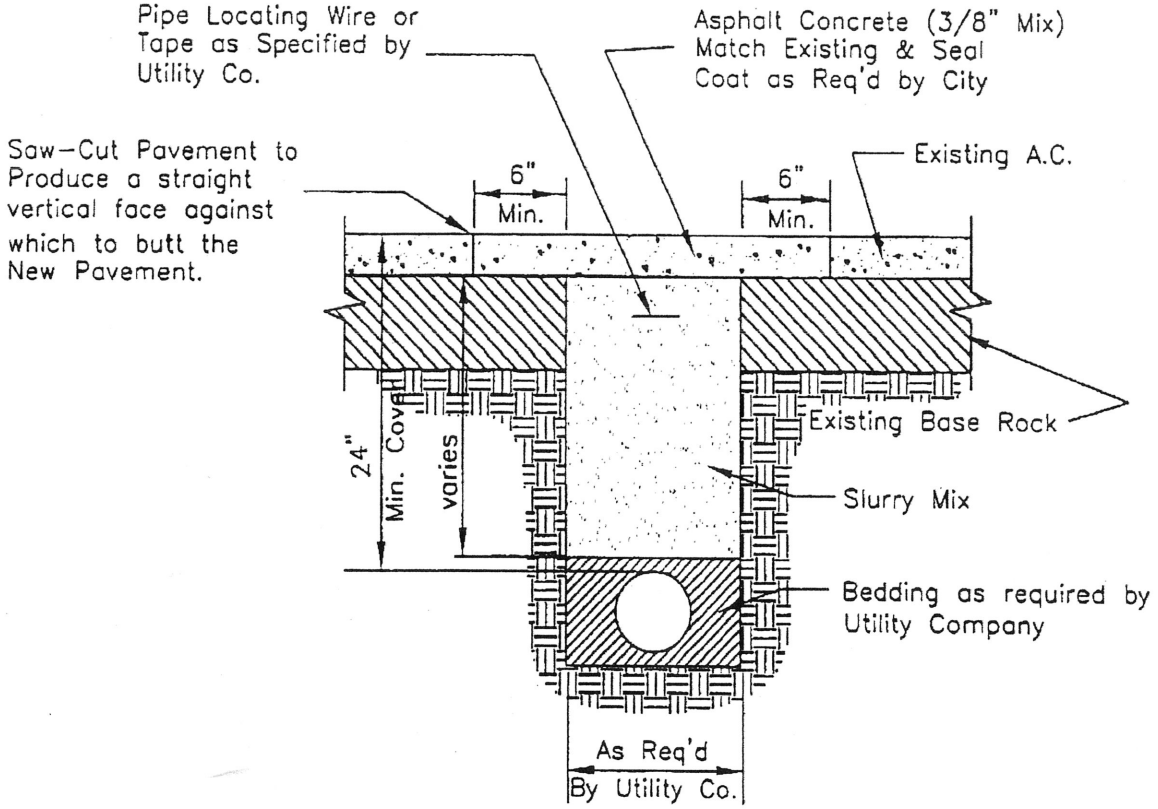

SLURRY MIX SPECIFICATIONS

Per Cubic Yard:

Two (2) Sack Portland Cement (Type II)
40 Gallons Water
1,200 pounds sand
Variations of this mix design may be used upon approval of the City Engineer
Backfill slurry mix to pavement grade and bridge with metal plate until slurry mix can support vehicular traffic. Asphalt concrete patch to match existing thickness, 2" minimum (Type 8-3/8" Aggregate)
Do not move slurry once placed in ditch.

Designed by	Approved by	Date	File name	Scale	Sheet 1 of 1
E.N.	I.H.	JUNE 2003		1"=1'-0"	

CITY OF SARATOGA	STANDARD DRAWING RESTORATION OF UTILITY EXCAVATIONS IN ASPHALT CONCRETE PAVEMENT

APPENDIX B

Waste Management Plan

Waste Management Plan for Saratoga Village Pedestrian Enhancement Street Light Work Project
Federal Number CML 5332(018):

The Contractor will be responsible for disposal of all waste generated in the process of the project. This will include:

1) Removal of the ballast and bulbs from the light fixtures and their disposal through the Santa Clara County Hazardous Waste Recycling and Disposal Program per the instructions for 'Business Hazardous Waste' on their website at www.hhw.org . Approximate weights of each the ballast is about 9lbs and approximate length of each light bulb is about 14 inches. The contractor will provide the City with a copy of the Manifest issued to them by the Santa Clara County Department of Hazardous Waste before the Notice of Completion on the project is given.

2) Removal from the work site, and disposal of, all the poles, bases, hardware and other non-hazardous components of the light fixtures.