CITY OF SARATOGA, CITY OF MONTE SERENO AND TOWN OF LOS GATOS
HIGHWAY 9 SAFETY IMPROVEMENT PHASE 2
BETWEEN BIG BASIN WAY AND LOS GATOS CITY LIMITS
CALTRANS PERMIT No. 0411-NMC0467

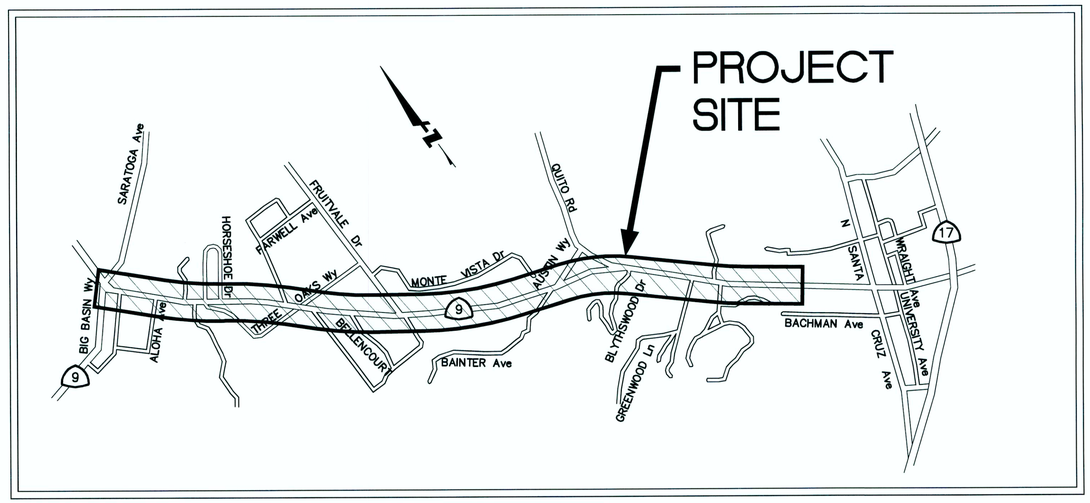

PREPARED BY:

N. V. BERNARDI
BKF ENGINEERS
8/13/12

REGISTERED PROFESSIONAL ENGINEER
N. V. BERNARDI
No. 45407
Exp. 9/30/12
CIVIL
STATE OF CALIFORNIA

LEGEND:

- EXISTING GAS LINE (PG&E)
- EXISTING WATER LINE (SAN JOSE WATER)
- EXISTING WATER LINE STEEL CASING
- EXISTING SANITARY SEWER LINE
- EXISTING OVERHEAD ELECTRICAL LINE (PG&E)
- EXISTING ELECTRICAL LINE (PG&E)
- EXISTING OVERHEAD TELEVISION CABLE (COMCAST)
- EXISTING TELEVISION CABLE (COMCAST)
- EXISTING TELEPHONE LINE (VERIZON)
- EXISTING STORM DRAIN LINE (TOWN LOS GATOS)
- EXISTING FENCE LINE
- EXISTING CURB AND GUTTER
- EXISTING THREADLINE OF CREEK
- PROPERTY LINE
- R/W — STATE RIGHT OF WAY
- EXISTING POWER POLE OR JOINT POLE
- EXISTING POWER POLE WITH GUY WIRE
- EXISTING ELECTROLIER
- EXISTING SIGN
- SDMH — EXISTING STORM DRAIN MANHOLE
- SSMH — EXISTING SANITARY SEWER MANHOLE
- FH — EXISTING FIRE HYDRANT
- EXISTING INLET
- GV — EXISTING GAS VALVE
- WV — EXISTING WATER VALVE
- WM — EXISTING WATER METER
- PB — EXISTING ELECTRIC PULL BOX
- Tel PB — EXISTING TELEPHONE PULL BOX
- SL PB — EXISTING STREET LIGHT PULL BOX
- TV PB — EXISTING TELEVISION PULL BOX
- PROPOSED SIGN
- PROPOSED DRIVEWAY
- PROPOSED CURB RAMP
- PROPOSED LIGHTED CROSSWALK

SHEET INDEX:

DRAWING No.	TITLE
T-1	TITLE SHEET
K-1	KEY MAP
X-1 THRU X-3	TYPICAL SECTION SHEETS
DEM-1 THRU DEM-5	DEMOLITION SHEETS
L-1 THRU L-5	LAYOUT SHEETS
G-1 THRU G-4	GRADING SHEETS
C-1 THRU C-11	CONSTRUCTION DETAILS
EC-1 THRU EC-4	EROSION CONTROL DETAILS
TH-1 THRU TH-3	TRAFFIC HANDLING PLAN
E-1 THRU E-3	IN-PAVEMENT LIGHTING SHEETS

ABBREVIATIONS:

&	AND	NTS	NOT TO SCALE
AC	ASPHALT CONCRETE	OG	ORIGINAL GRADE
AP	ANGLE POINT	OHE	OVERHEAD ELECTRICAL
BC	BEGIN OF CURVE	PCC	POINT OF COMPOUND CURVE
BEG	BEGIN	PG&E	PACIFIC GAS AND ELECTRIC CO.
BW	BACK OF WALK	PP	POWER POLE
℄	CENTER LINE	PPB	PEDESTRIAN PUSHBUTTON
CMP	CORRUGATED METAL PIPE	PR	PROPOSED
CONC	CONCRETE	PRC	POINT OF REVERSE CURVE
CR	CURB RAMP	PT	POINT
CT	CALTRANS	PVMT	PAVEMENT
DET	DETAIL	RCP	REINFORCED CONCRETE PIPE
EC	END OF CURVE	RIM	RIM ELEVATION
ELEV	ELEVATION	RT	RIGHT
EP	EDGE OF PAVEMENT	R/W	RIGHT OF WAY
ETW	EDGE OF TRAVELED WAY	SD	STORM DRAIN
EX	EXISTING	SDCB	STORM DRAIN CATCH BASIN
FC	FACE OF CURB	SDMH	STORM DRAIN MANHOLE
FG	FINISHED GRADE	SS	SANITARY SEWER
FH	FIRE HYDRANT	SSMH	SANITARY SEWER MANHOLE
G	GAS	STD	STANDARD
HC	HANDICAP	SW	SIDEWALK
HMA	HOT MIXED ASPHALT	T	TELEPHONE
HP	HINGE POINT	TC	TOP OF CURB
INV	INVERT ELEVATION	TD	TOP OF DIKE
JB	JUNCTION BOX	TG	TOP OF GRATE
LG	LIP OF GUTTER	TYP	TYPICAL
MH	MANHOLE	W	WATER

BENCH MARK

THE HORIZONTAL DATUM IS BASED UPON NORTH AMERICAN DATUM OF 1983 (NAD 83)

THE VERTICAL DATUM IS BASED ON THE NATIONAL GEODETIC VERTICAL DATUM OF 1929 (NGVD 29)

FOUND BRASS DISK IN MONUMENT WELL STAMPED "LG#32" AT THE INTERSECTION OF SARATOGA – LOS GATOS ROAD AND TAIT AVENUE. ELEVATION = 401.02 (N 1909555.8378, E 6130100.7106).

BKF ENGINEERS / SURVEYORS / PLANNERS
1650 TECHNOLOGY DRIVE, SUITE 650
SAN JOSE, CA 95110
(408) 467-9100

Highway 9 Safety Improvement Project
Phase 2
Title Sheet

NO.	BY	DATE	REVISIONS:

DATE 8/1/2012
SCALE NO SCALE
SHEET NO. T-1

N:\PPW\TLG36X24.dwg

DATE: TIME: DRAWING NAME:
SERVER: SERVICE: PLOTTING VIEW: PAGE: PAGE
PATH: DESIGNER:
XREFS: P:\Eng10\107004 - Hwy 9 Phase 2\DWG\Sheets\Title\T-1.dwg 10 Aug 2012 1:52:31pm ASHU

DATE: TIME: DRAWING NAME:
SERVER: SERVICE: PLOTTING VIEW: PROJ. MGR:
PATH: DESIGNER:

XREFS: P:\Eng10\107004 - Hwy 9 Phase 2\DWG\Sheets\TitleK-1.dwg 01 Aug 2012 3:32:01pm Ashu

BKF
ENGINEERS / SURVEYORS / PLANNERS
1650 TECHNOLOGY DRIVE, SUITE 650
SAN JOSE, CA 95110
(408) 467-9100

Highway 9 Safety Improvement Project Phase 2

Key Map

NO.	BY	DATE	REVISIONS:

DATE
8/1/2012

SCALE
NO SCALE

SHEET NO.
K-1

N:\PPW\TLG36X24.dwg

NOTES:

1. DIMENSIONS OF THE STRUCTURAL SECTIONS ARE SUBJECT TO TOLERANCES SPECIFIED IN THE CALTRANS STANDARD SPECIFICATIONS.
2. FOR CURB TYPES AND LIMITS, SEE LAYOUT PLANS.
3. FOR DIKE TYPES AND LIMITS, SEE LAYOUT PLANS.
4. FOR RETAINING WALLS LIMITS, SEE LAYOUT PLANS.
5. FOR VERTICAL CURB LIMITS, SEE LAYOUT PLANS
6. CONTRACTOR SHALL SAWCUT TO A NEAT LINE.
7. FOR HMA DEEP LIFT LIMITS AND LOCATIONS, SEE LAYOUT & GRADING PLANS.
8. FOR LIMITS OF SAWCUT, SEE LAYOUT & GRADING PLANS.
9. FOR LIMITS OF HMA OVERLAY , SEE LAYOUT & GRADING PLANS.
10. FOR FENCE TYPES AND LIMITS, SEE LAYOUT PLANS.

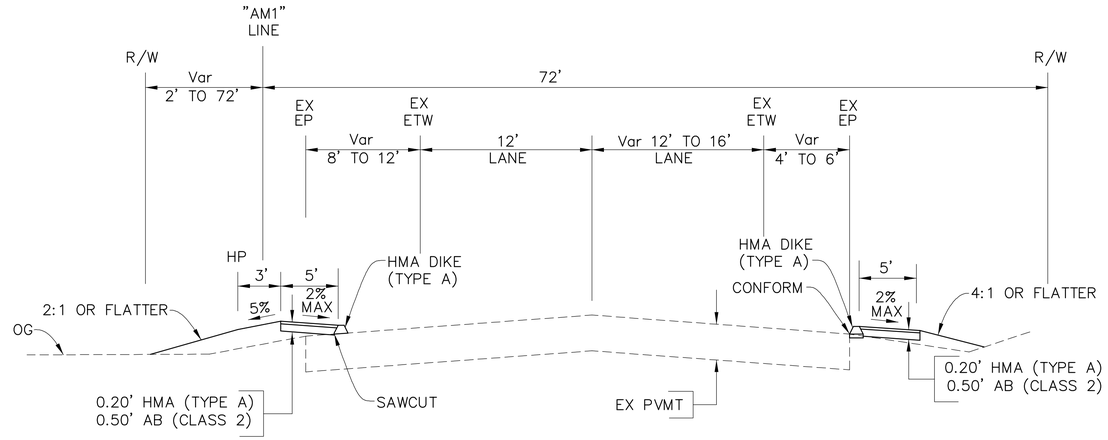

"AM1" 51+68.82 TO 52+00

"AM1" 50+25.23 TO 52+18.30

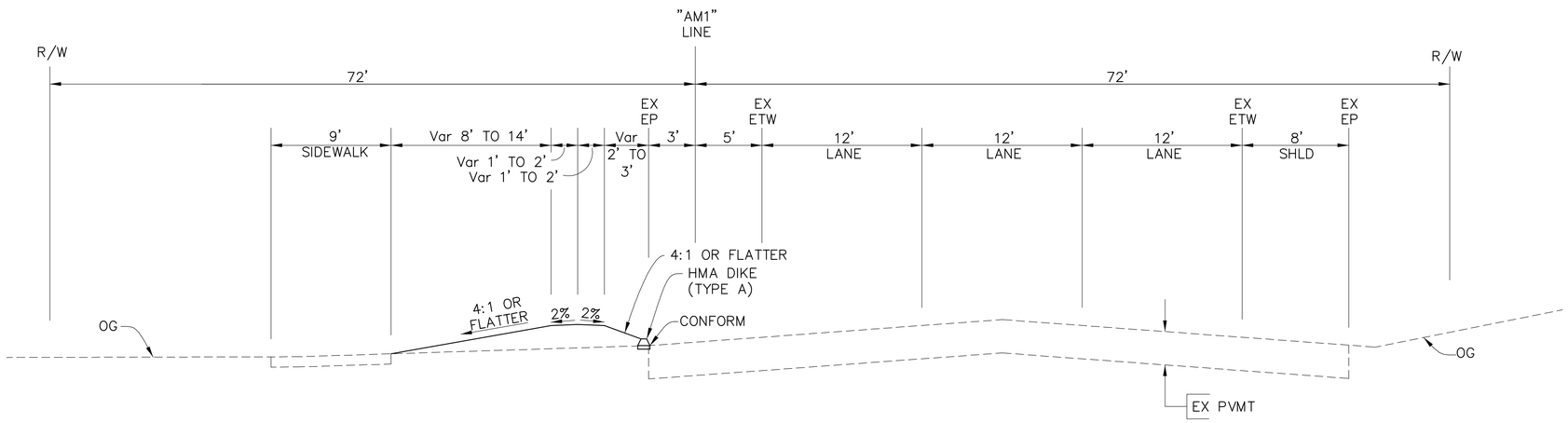

"AM1" 47+35.24 TO 50+64.48

HIGHWAY 9

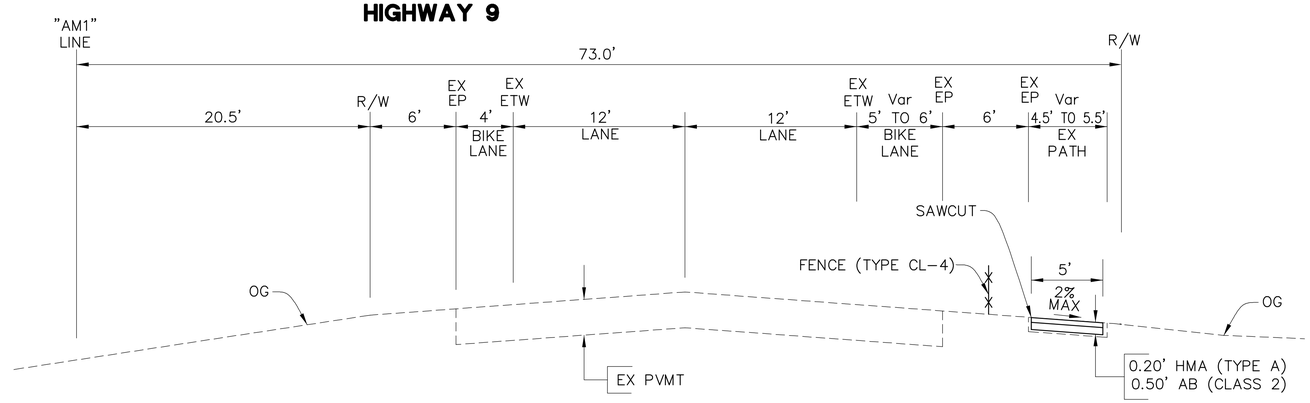

"AM1" 16+20.48 TO 27+33.28

FOR ABBREVIATIONS & LEGEND, SEE SHEET T-1.

BKF
ENGINEERS / SURVEYORS / PLANNERS
1650 TECHNOLOGY DRIVE, SUITE 650
SAN JOSE, CA 95110
(408) 467-9100

Highway 9 Safety Improvement Project Phase 2

Typical Sections

NO.	BY	DATE	REVISIONS:

DATE 8/1/2012

SCALE NO SCALE

SHEET NO. X-1

DATE: TIME: DRAWING NAME: PROJ. MGR:
SERVER: SERVICE: PLOTTING VIEW:
PATH: DESIGNER:
XREFS: P:\Eng10\107004 - Hwy 9 Phase 2\DWG\Sheets\Typical\X-1.dwg 13 Aug 2012 8:35:12am Ashu
N:\PPW\TLG36X24.dwg

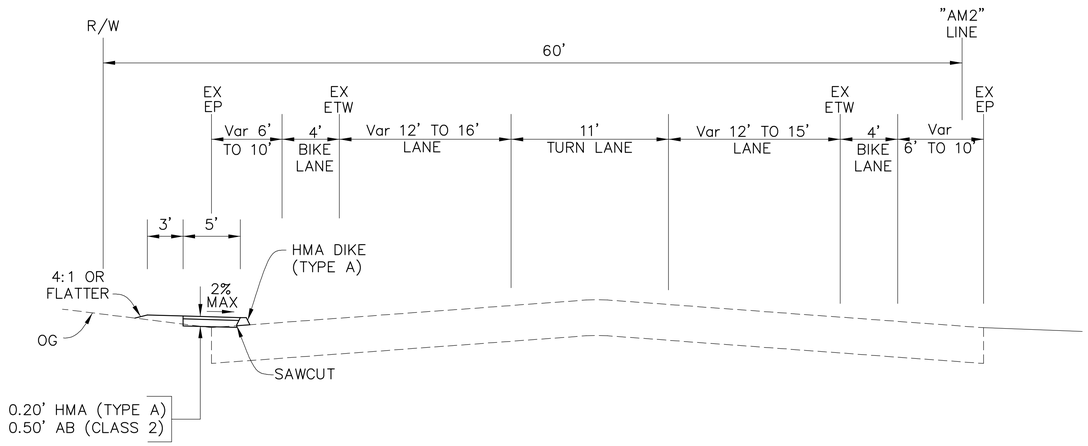

"AM2" 161+33.93 TO 163+74.01

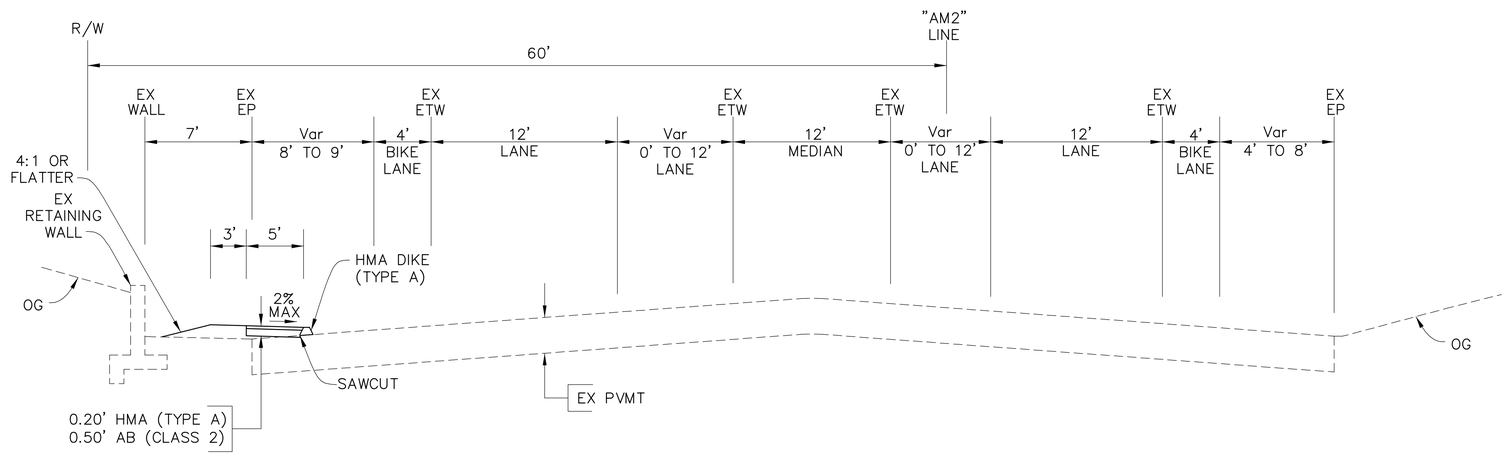

"AM2" 158+97.09 TO 161+15.04

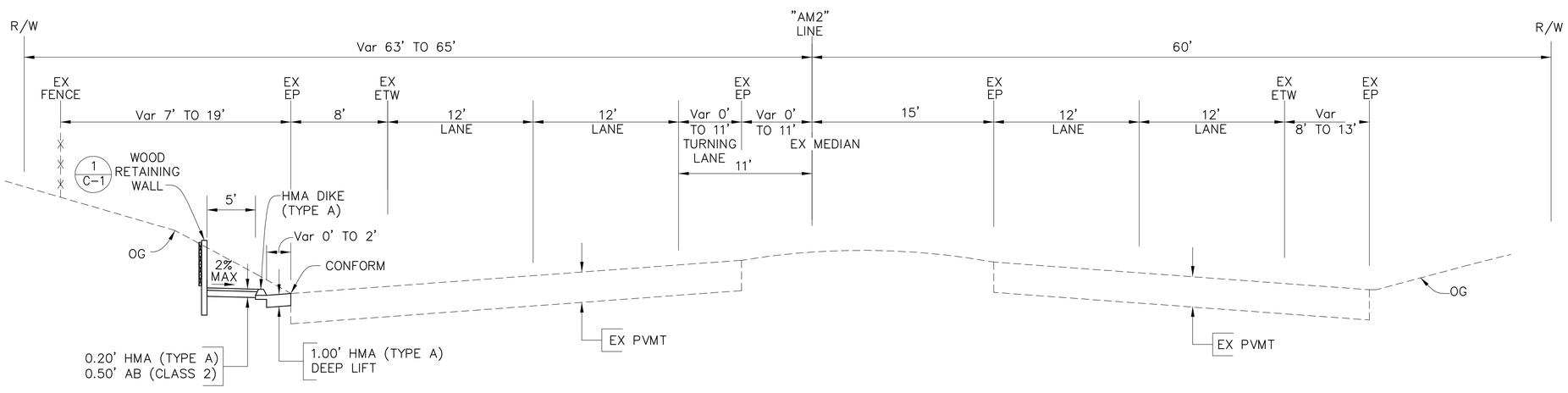

"AM2" 155+90.33 TO 157+76.02

HIGHWAY 9

FOR NOTES, ABBREVIATIONS & LEGEND, SEE SHEETS T-1 & X-1.

BKF
ENGINEERS / SURVEYORS / PLANNERS
1650 TECHNOLOGY DRIVE, SUITE 650
SAN JOSE, CA 95110
(408) 467-9100

Highway 9 Safety Improvement Project Phase 2

Typical Sections

NO.	BY	DATE	REVISIONS:

DATE 8/1/2012

SCALE NO SCALE

SHEET NO. X-2

N:\PPW\TLG36X24.dwg

DATE: TIME: DRAWING NAME:
SERVER: SERVICE: PLOTTING VIEW: PROJ. MGR:
PATH: DESIGNER:

XREFS: P:\Eng10\107004 - Hwy 9 Phase 2\DWG\Sheets\Typical\X-2.dwg 13 Aug 2012 8:37:25am Ashu

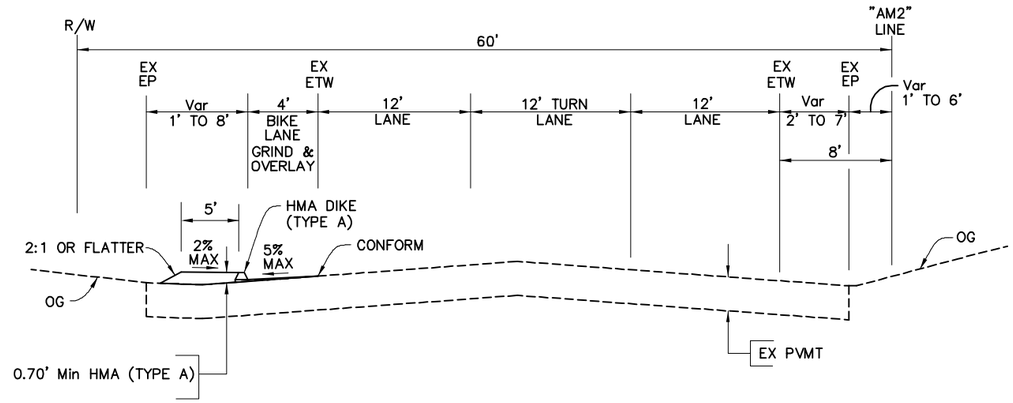

"AM2" 170+34.88 TO 178+60.09

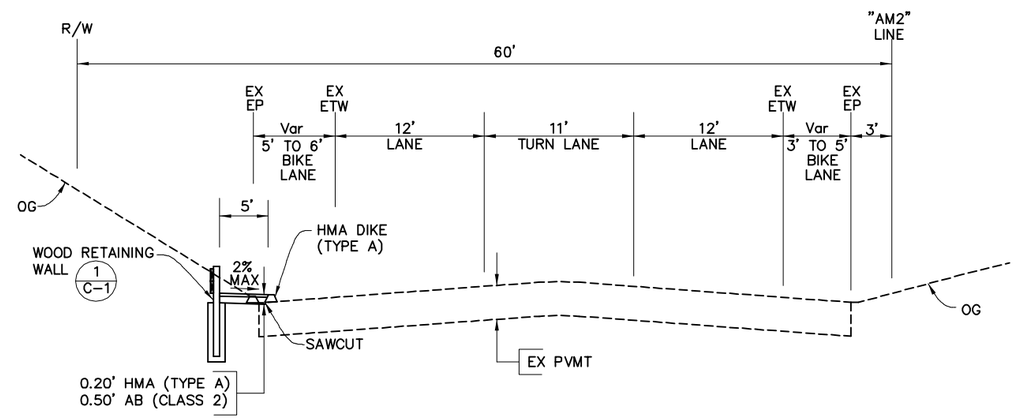

"AM2" 167+08.94 TO 168+02.25

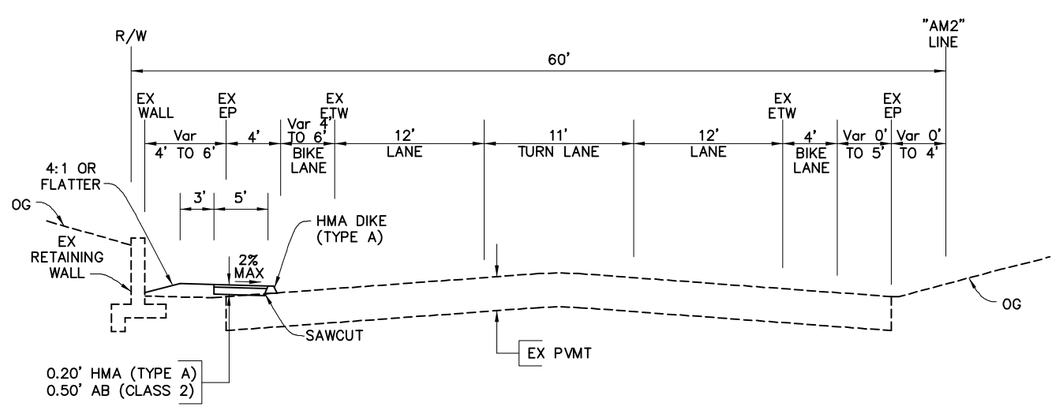

"AM2" 168+02.25 TO 169+96.72
"AM2" 164+30.28 TO 167+08.94

HIGHWAY 9

FOR NOTES, ABBREVIATIONS & LEGEND, SEE SHEETS T-1 & X-1.

BKF Engineers | Surveyors | Planners
1650 TECHNOLOGY DRIVE, SUITE 650
SAN JOSE, CA. 95110
(408) 467-9100

Highway 9 Safety Improvement Project
Phase 2
Typical Sections

NO.	BY	DATE	REVISIONS:

DATE 8/1/2012
SCALE NO SCALE
SHEET NO. X-3

N:\PPW\TLG36X24.dwg

DATE: TIME: DRAWING NAME:
SERVER: SERVICE: PLOTTING VIEW: PROJ. MGR:
PATH: DESIGNER:

XREFS: P:\Eng10\107004 - Hwy 9 Phase 2\DWG\Sheets\Typical\X-3.dwg 13 Aug 2012 8:39:25am Ashu

NOTES:

1. CONTACT UNDERGROUND SERVICE ALERT (U.S.A.) (800) 642–2444 AT LEAST 48 HOURS PRIOR TO BEGINNING ANY EXCAVATION WORK FOR ASSISTANCE IN LOCATING UNDERGROUND UTILITIES.
2. ALL KNOWN EX UNDERGROUND UTILITIES ARE SHOWN ON THE PLAN AS BEST AS CAN BE ESTABLISHED FROM AVAILABLE INFORMATION. THE CONTRACTOR SHALL PROCEED WITH DUE CAUTION DURING UNDERGROUND OPERATIONS AND SHALL REPAIR OR REPLACE ALL UTILITIES AND SERVICES, EITHER MARKED IN THE FIELD OR INDICATED ON THE PLANS, WHICH ARE DAMAGED DURING DEMOLITION AT HIS OWN EXPENSE. EX IRRIGATION SYSTEM COMPONENTS ARE ALSO SUBJECT TO THIS PROVISION WHETHER SPECIFICALLY SHOWN ON THE PLANS OR NOT. CONTRACTOR SHALL BE RESPONSIBLE FOR REPAIR AND/OR REPLACEMENT OF DAMAGED UTILITIES WHETHER UNMARKED IN THE FIELD OR NOT SHOWN (REF. STANDARD SPEC. SECTION 8–1.10.)
3. ALL UTILITIES THAT CALL OUT FOR ADJUSTMENT SHALL BE ADJUSTED BY CONTRACTOR UNLESS OTHERWISE NOTED.
4. CONTRACTOR SHALL REPLACE OR REPAIR, AT HIS OWN EXPENSE, ALL DAMAGED, REMOVED OR OTHERWISE DISTURBED WALLS, FENCES, CURBS, ABOVE–GRADE IMPROVEMENTS OR PHYSICAL FEATURES OF WHATEVER NATURE TO THEIR ORIGINAL CONDITIONS, WHEN SPECIFICALLY INDICATED ON THE PLANS OR SPECIFICATIONS.
5. FRAME AND COVERS SHALL BE ADJUSTED TO FINISHED GRADE FOR ALL EX UTILITY STRUCTURES AS NOTED.
6. ALL EX PAVEMENT STRIPING & MARKINGS THAT CONFLICT WITH PROPOSED PAVEMENT STRIPING & MARKINGS, SHALL BE REMOVED.
7. EXACT LOCATION AND POSITION OF ALL RELOCATED ITEMS, SHALL BE VERIFIED IN THE FIELD BY THE ENGINEER.
8. PRIOR TO CONSTRUCTION, ENGINEER AND CONTRACTOR SHALL FIELD VERIFY DEMOLITION LIMITS.

LEGEND:

- EX TREE TO REMAIN
- EX TREE TO BE REMOVED
- REMOVE EX AC PAVEMENT
- REMOVE EX AC SIDEWALK, CURB RAMP, AC DITCH
- REMOVE EX PCC PATH, PCC SIDEWALK AND HANDICAP RAMP
- 0.15' Max GRIND EX PAVEMENT

DEMOLITION NOTES:

1. EX FIRE HYDRANT TO REMAIN (DO NOT DISTURB)
2. EX CLF TO BE REMOVED
3. EX JOINT POLE TO REMAIN (DO NOT DISTURB)
4. ADJUST EX WATER METER TO GRADE
5. EX MAIL BOX TO REMAIN (DO NOT DISTURB)
6. EX CTV BOX TO REMAIN (DO NOT DISTURB)
7. EX FENCE TO REMAIN (DO NOT DISTURB)
8. ADJUST EX WATER VALVE TO GRADE
9. EX UTILITY BOX TO REMAIN (DO NOT DISTURB)
10. EX SSMH TO REMAIN (DO NOT DISTURB)
11. RELOCATE EX MAIL BOX (SEE NOTE 7)
12. ADJUST INLET TO GRADE
13. EX CONC GUTTER TO REMAIN
14. ADJUST EX PG&E BOX TO GRADE (BY OTHERS)
15. REMOVE EX METAL POST
16. RELOCATE EX SIGN (SEE NOTE 7)
17. RELOCATE EX CALL BOX (BY OTHERS)
18. REMOVE EX AC DIKE
19. REMOVE EX HEADWALL
20. EX SIGN TO REMAIN
21. NOT USED
22. ADJUST EX SSMH TO GRADE
23. ADJUST EX UTIL MH TO GRADE (BY OTHERS)
24. REMOVE EX MBGR
25. RELOCATE EX SIGNAL WARNING POLE (SEE NOTE 7)
26. ADJUST EX CTV BOX TO GRADE (BY OTHERS)
27. EX WALL TO REMAIN (DO NOT DISTURB)
28. EX WATER VALVE TO REMAIN (DO NOT DISTURB)
29. ADJUST EX UTILITY BOX TO GRADE (BY OTHERS)
30. EX WATER METER TO REMAIN (DO NOT DISTURB)
31. EX DRAINAGE INLET TO REMAIN (DO NOT DISTURB)
32. ADJUST EX SIGNAL BOX TO GRADE
33. EX UTILITY MH TO REMAIN (DO NOT DISTURB)
34. EX SIGNAL POLE TO REMAIN (DO NOT DISTURB)
35. ADJUST EX SSCO TO GRADE
36. SAWCUT EXISTING PAVEMENT AND/OR CONCRETE TO A NEAT LINE
37. EX COLUMN TO REMAIN (DO NOT DISTURB)
38. ADJUST EX TELECOMMUNICATION BOX TO GRADE (BY OTHERS)
39. CAP EX DRAINAGE INLET
40. RELOCATE EX FIRE HYDRANT
41. EX ROCK WALL TO REMAIN (DO NOT DISTURB)
42. RESET EX SIGN
43. ADJUST EX FIRE HYDRANT TO GRADE
44. REMOVE WOODEN FENCE
45. REMOVE CONCRETE WALL
46. RECONSTRUCT CONCRETE WALL
47. RECONSTRUCT WOOD FENCE
48. RECONSTRUCT BRICK WALL
49. RECONSTRUCT CONCRETE MAILBOX
50. RECONSTRUCT STONE WALL
51. RECONSTRUCT CHAIN LINK FENCE

BKF
ENGINEERS / SURVEYORS / PLANNERS
1650 TECHNOLOGY DRIVE, SUITE 650
SAN JOSE, CA 95110
(408) 467–9100

Highway 9 Safety Improvement Project Phase 2
Demolition Plan

NO.	BY	DATE	REVISIONS:

DATE 8/1/2012
SCALE 1" = 20'
SHEET NO. DEM–1

N: \PPW\TLG36X24.dwg

DATE: TIME: DRAWING NAME: PROJ. MGR:
SERVER: SERVICE: PLOTTING VIEW: DESIGNER:
PATH:
XREFS: P:\Eng10\107004 – Hwy 9 Phase 2\DWG\Sheets\Demo\DEM-1.dwg 13 Aug 2012 4:29:36pm Ashu

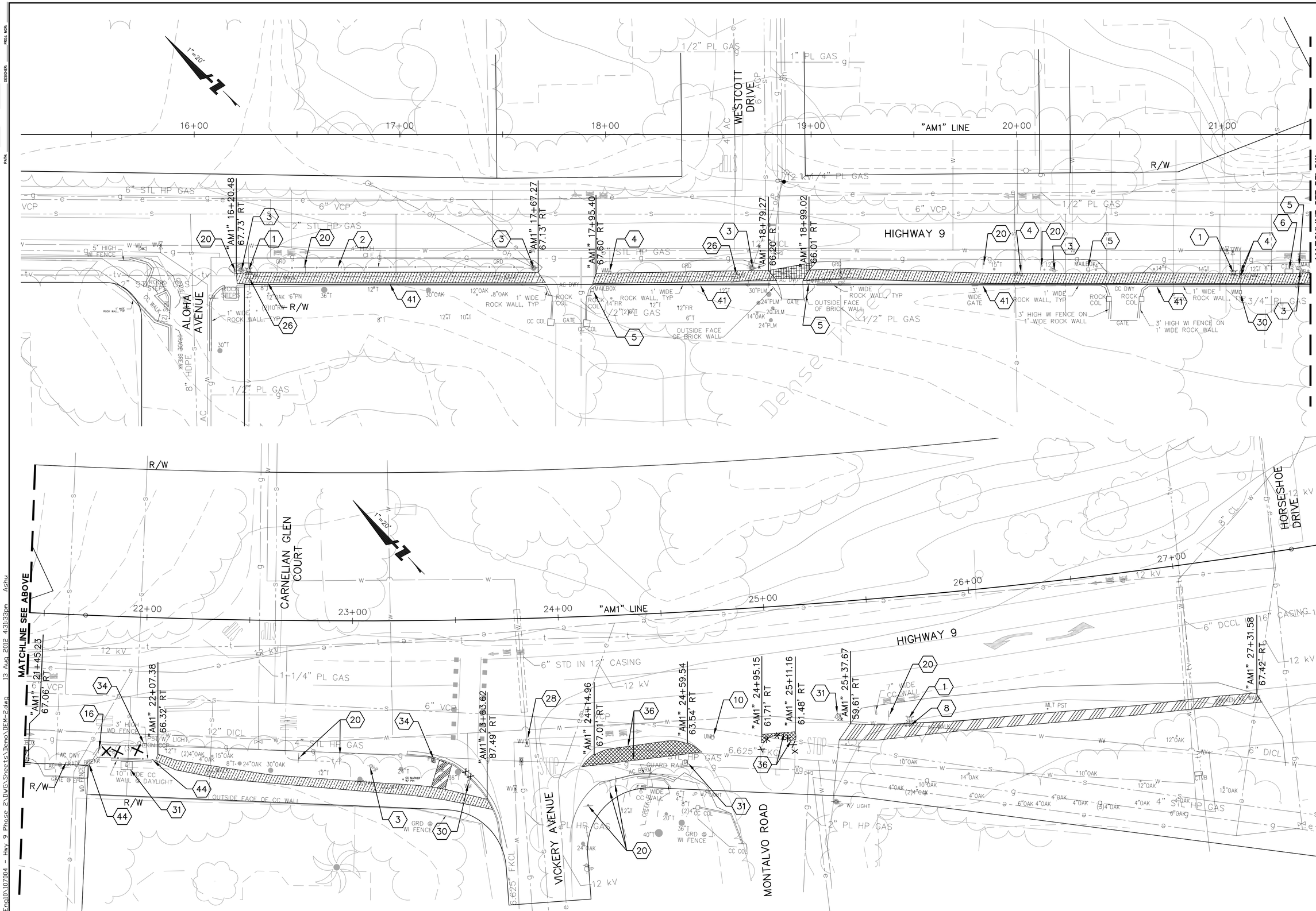

FOR NOTES, ABBREVIATIONS & LEGEND, SEE SHEETS T-1 & DEM-1.

BKF
ENGINEERS / SURVEYORS / PLANNERS
1650 TECHNOLOGY DRIVE, SUITE 650
SAN JOSE, CA 95110
(408) 467-9100

Highway 9 Safety Improvement Project Phase 2

Demolition Plan

NO.	BY	DATE	REVISIONS:

DATE 8/1/2012

SCALE 1" = 20'

SHEET NO. DEM-2

N:\PPW\TLG36X24.dwg

XREFS: P:\Eng10\107004 - Hwy 9 Phase 2\DWG\Sheets\Demo\DEM-2.dwg 13 Aug 2012 4:31:33pm Ashu

DATE: TIME: DRAWING NAME: PROJ. MGR:
SERVER: SERVICE: PLOTTING VIEW: DESIGNER:
PATH:

DATE: _____ TIME: _____ DRAWING NAME: _____
SERVER: _____ SERVICE: _____ PLOTTING VIEW: _____
PATH: _____ DESIGNER: _____ PROJ. MGR: _____

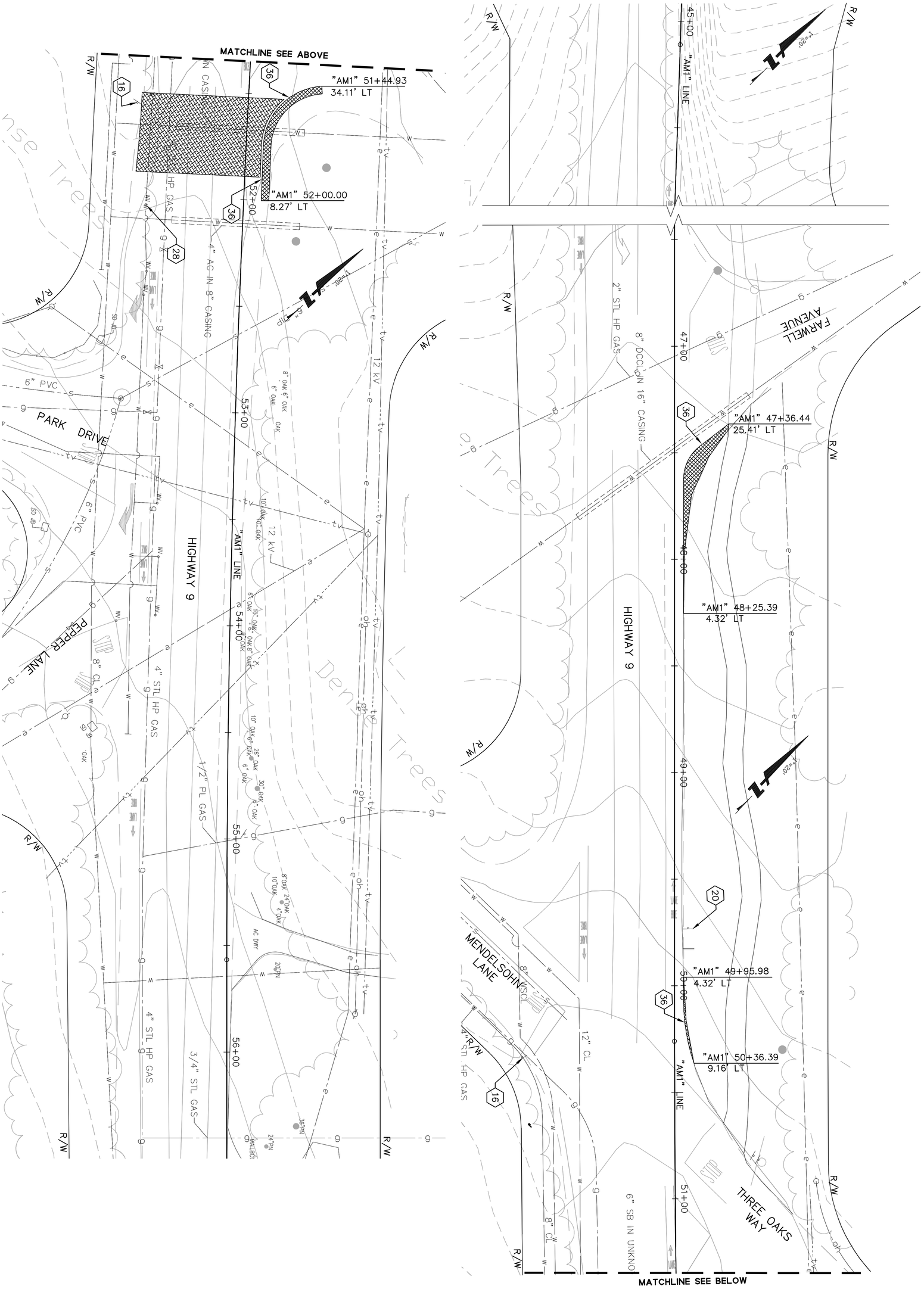

FOR NOTES, ABBREVIATIONS & LEGEND, SEE SHEETS T-1 & DEM-1.

NO.	BY	DATE	REVISIONS:

DATE 8/1/2012
SCALE 1" = 20'
SHEET NO. DEM-3

Highway 9 Safety Improvement Project
Phase 2

Demolition Plan

BKF
ENGINEERS / SURVEYORS / PLANNERS
1650 TECHNOLOGY DRIVE, SUITE 650
SAN JOSE, CA 95110
(408) 467-9100

N:\PPW\TLC36X24.dwg

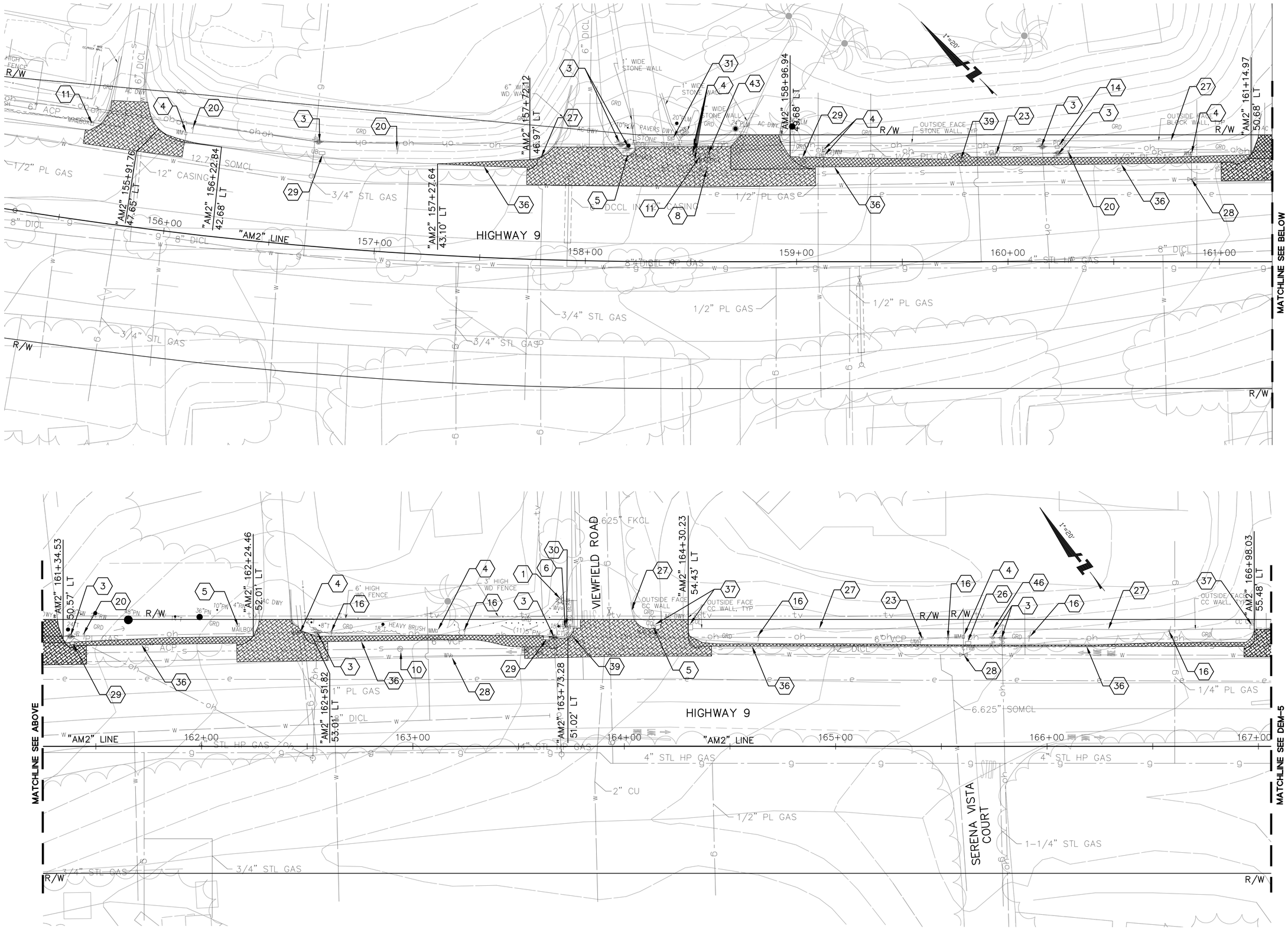

FOR NOTES, ABBREVIATIONS & LEGEND, SEE SHEETS T-1 & DEM-1.

BKF
ENGINEERS / SURVEYORS / PLANNERS
1650 TECHNOLOGY DRIVE, SUITE 650
SAN JOSE, CA 95110
(408) 467-9100

TOWN OF LOS GATOS
CITY OF MONTE SERENO
CITY OF SARATOGA

Highway 9 Safety Improvement Project
Phase 2
Demolition Plan

NO.	BY	DATE	REVISIONS:

DATE 8/1/2012

SCALE 1" = 20'

SHEET NO. DEM-4

N:\PPW\TLG36X24.dwg

DRAWING NAME: PROJ. MGR:
PLOTTING VIEW:
DESIGNER:
TIME: DATE:
SERVICE: SERVER:
PATH:

XREFS: P:\Eng10\107004 - Hwy 9 Phase 2\DWG\Sheets\Demo\DEM-4.dwg 10 Aug 2012 8:38:55am HERN

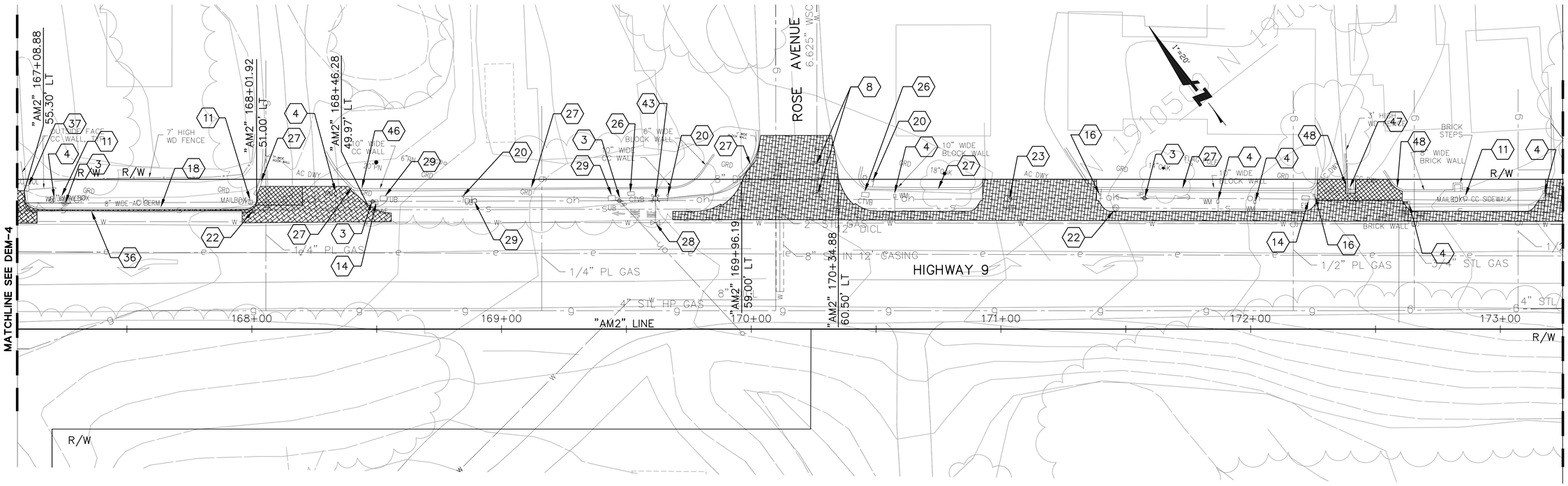

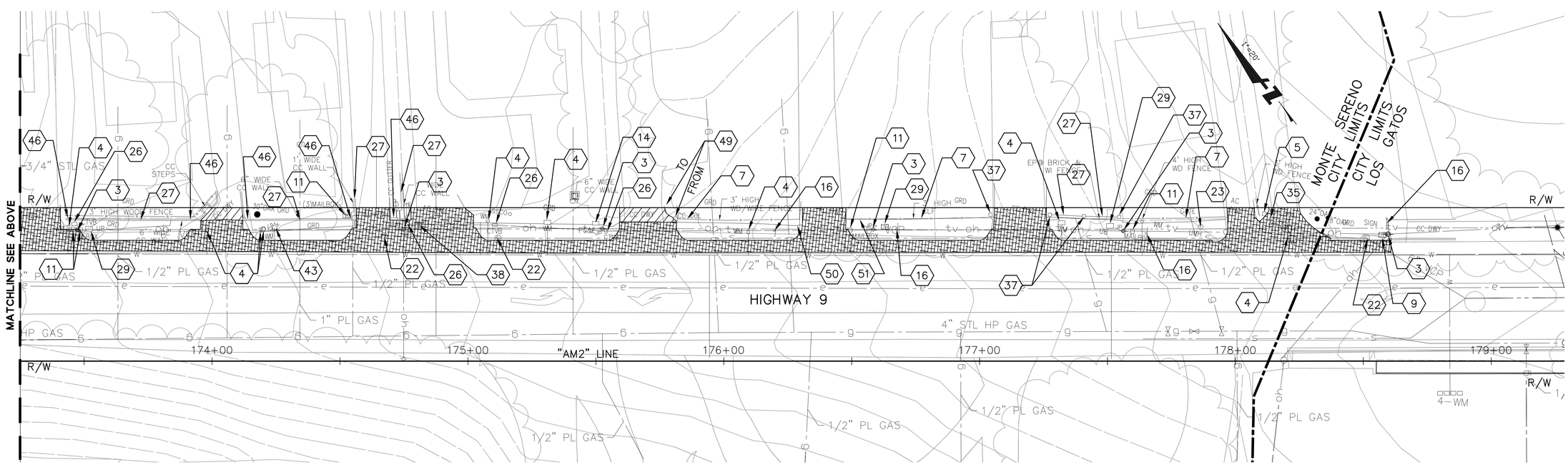

FOR NOTES, ABBREVIATIONS & LEGEND, SEE SHEETS T-1 & DEM-1.

BKF
ENGINEERS | SURVEYORS | PLANNERS
1650 TECHNOLOGY DRIVE, SUITE 650
SAN JOSE, CA 95110
(408) 467-9100

Highway 9 Safety Improvement Project
Phase 2
Demolition Plan

NO.	BY	DATE	REVISIONS:

DATE 8/1/2012

SCALE 1" = 20'

SHEET NO. DEM-5

N:\PPW\TLG36X24.dwg

XREFS: P:\Eng10\107004 - Hwy 9 Phase 2\DWG\Sheets\Demo\DEM-5.dwg 01 Aug 2012 3:44:22pm Ashu

NOTES:

1. LINE/CURVE TABLE INFORMATION REFERS TO FACE OF CURB OR EDGE OF PAVEMENT UNLESS OTHERWISE NOTED.
2. FOR TYPICAL SECTIONS, SEE SHEET X-1 THRU X-3.
3. FOR SAWCUT LIMITS AND CONFORMS, CONTRACTOR TO VERIFY LOCATIONS WITH ENGINEER PRIOR TO CONSTRUCTION.
4. FOR CURB RAMP DETAILS, SEE CONSTRUCTION DETAILS AND GRADING SHEETS.
5. CONSTRUCT CURB (TYPE A1-6), CURB (TYPE B3-6) PER CALTRANS STD PLAN A87A.
6. CONSTRUCT HMA DIKE (TYPE A) PER CALTRANS STD PLAN A87B.
7. NOT USED
8. FOR EXISTING UTILITY INFORMATION, SEE DEMOLITION PLANS.
9. CONSTRUCT FENCE (TYPE CL-4), PER CALTRANS STD PLAN A85.
10. FOR VERTICAL CURB DETAIL, SEE C-3.
11. FOR SOLAR POWERED PEDESTRIAN LIGHTING, SEE ELECTRICAL SHEETS.
12. FOR DRAINAGE PLAN AND PROFILE, SEE C-8.
13. FOR DETECTABLE WARNING SURFACE DETAILS, SEE C-3.
14. FOR SANITARY SEWER DETAILS, SEE C-11.
15. FOR REMOVABLE BOLLARD DETAILS, SEE C-2.
16. ALL ROADSIDE SIGNS ARE BASED ON THE LATEST CALIFORNIA MUTCD AND CALTRANS STANDARD PLANS.
17. CONTRACTOR SHALL REMOVE EXISTING PAVEMENT DELINEATION WHICH CONFLICT WITH THIS PLAN BY SAND BLASTING PRIOR TO NEW STRIPING INSTALLATION.
18. SIGN LOCATION SHOWN IS APPROXIMATE. EXACT LOCATION TO BE DETERMINED BY THE CITY ENGINEER.
19. ALL PAVEMENT STRIPING AND MARKING SHALL BE THERMOPLASTIC.

LEGEND:

- HMA PATH [0.20' HMA (TYPE A), 0.50' AB (CI 2)]
- HMA OVERLAY [0.15' TO 0.50' HMA (TYPE A)]
- HMA PATH [0.70' TO 1.00' HMA (TYPE A)]
- ROADWAY PVMT [0.25' HMA (TYPE A), 0.75' AB (CI 2)]
- DRIVEWAY PVMT [0.50' HMA (TYPE A), 0.35' AB (CI 2)]
- COBBLESTONE MEDIAN
- CURB RAMP
- C1 — CURVE NUMBER
- INSTALL SIGN (DESIGNATION PER LATEST MUTCD EDITION – CALIFORNIA CODE) EXACT LOCATIONS WILL BE DETERMINED BY THE ENGINEER.
- EXISTING SIGN
- No. — STRIPING DETAIL NUMBER
- 1 / C-7 — DETAIL NUMBER DESIGNATION (DETAIL 1 ON SHEET C-7)
- CONFORM
- SAWCUT
- DETECTABLE WARNING SURFACE (SEE NOTE 13)

BKF
ENGINEERS / SURVEYORS / PLANNERS
1650 TECHNOLOGY DRIVE, SUITE 650
SAN JOSE, CA 95110
(408) 467-9100

Highway 9 Safety Improvement Project Phase 2 Layout

NO.	BY	DATE	REVISIONS:

DATE 8/1/2012

SCALE 1" = 20'

SHEET NO. L-1

DATE: TIME: DRAWING NAME:
SERVER: SERVICE: PLOTTING VIEW: PROJ. MGR:
PATH: DESIGNER:
XREFS: P:\Eng10\107004 - Hwy 9 Phase 2\DWG\Sheets\Layout\L-1.dwg 13 Aug 2012 4:44:13pm Ashu
N:\PPW\TLG36X24.dwg

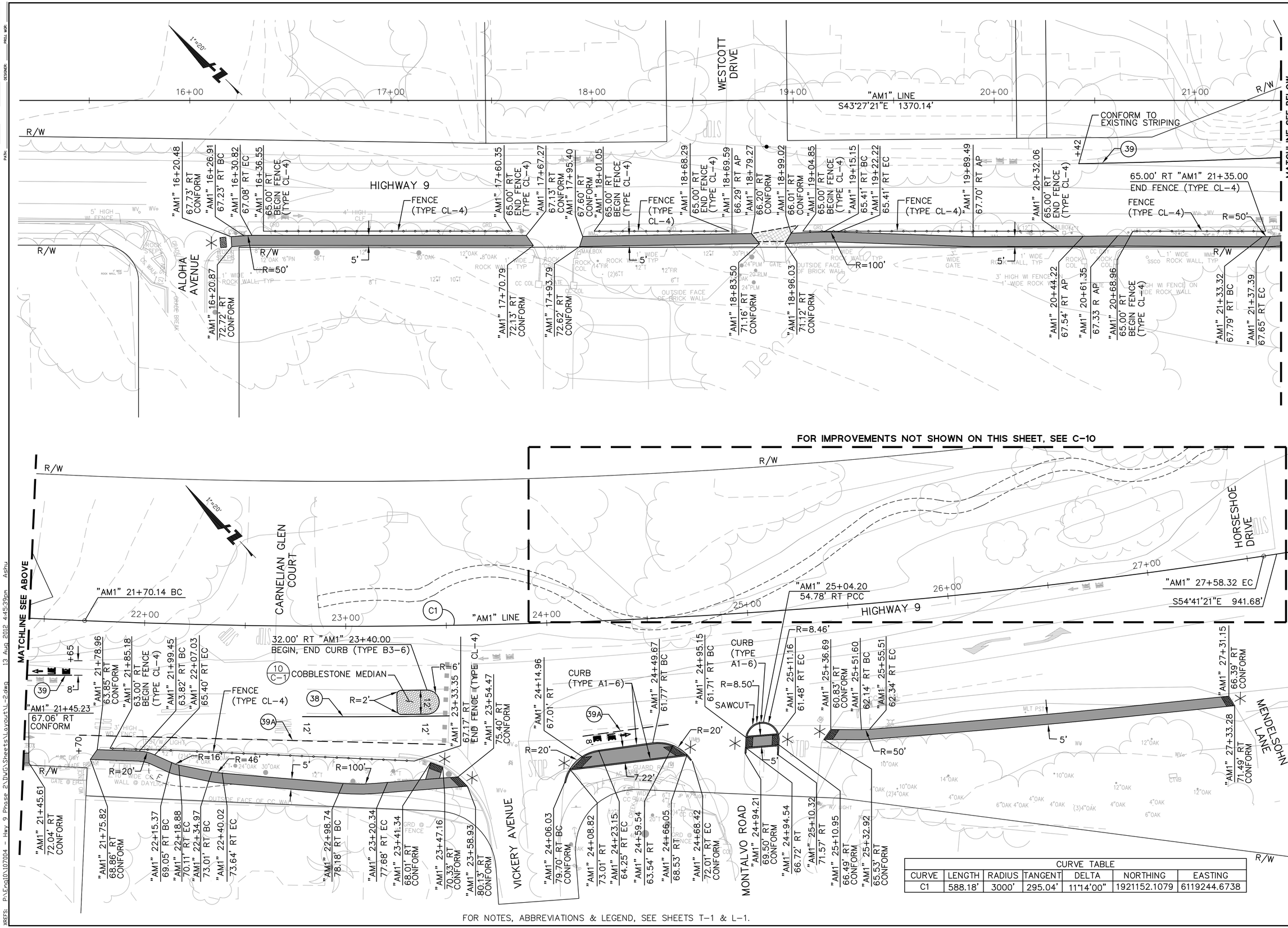

CURVE TABLE						
CURVE	LENGTH	RADIUS	TANGENT	DELTA	NORTHING	EASTING
C1	588.18'	3000'	295.04'	11°14'00"	1921152.1079	6119244.6738

BKF
ENGINEERS / SURVEYORS / PLANNERS
1650 TECHNOLOGY DRIVE, SUITE 650
SAN JOSE, CA 95110
(408) 467-9100

Highway 9 Safety Improvement Project Phase 2

Layout

NO.	BY	DATE	REVISIONS:

DATE 8/1/2012

SCALE 1" = 20'

SHEET NO. L-2

N:\PPW\TLG36X24.dwg

XREFS: P:\Eng10\107004 - Hwy 9 Phase 2\DWG\Sheets\Layout\L-2.dwg 13 Aug 2012 4:45:39pm Ashu

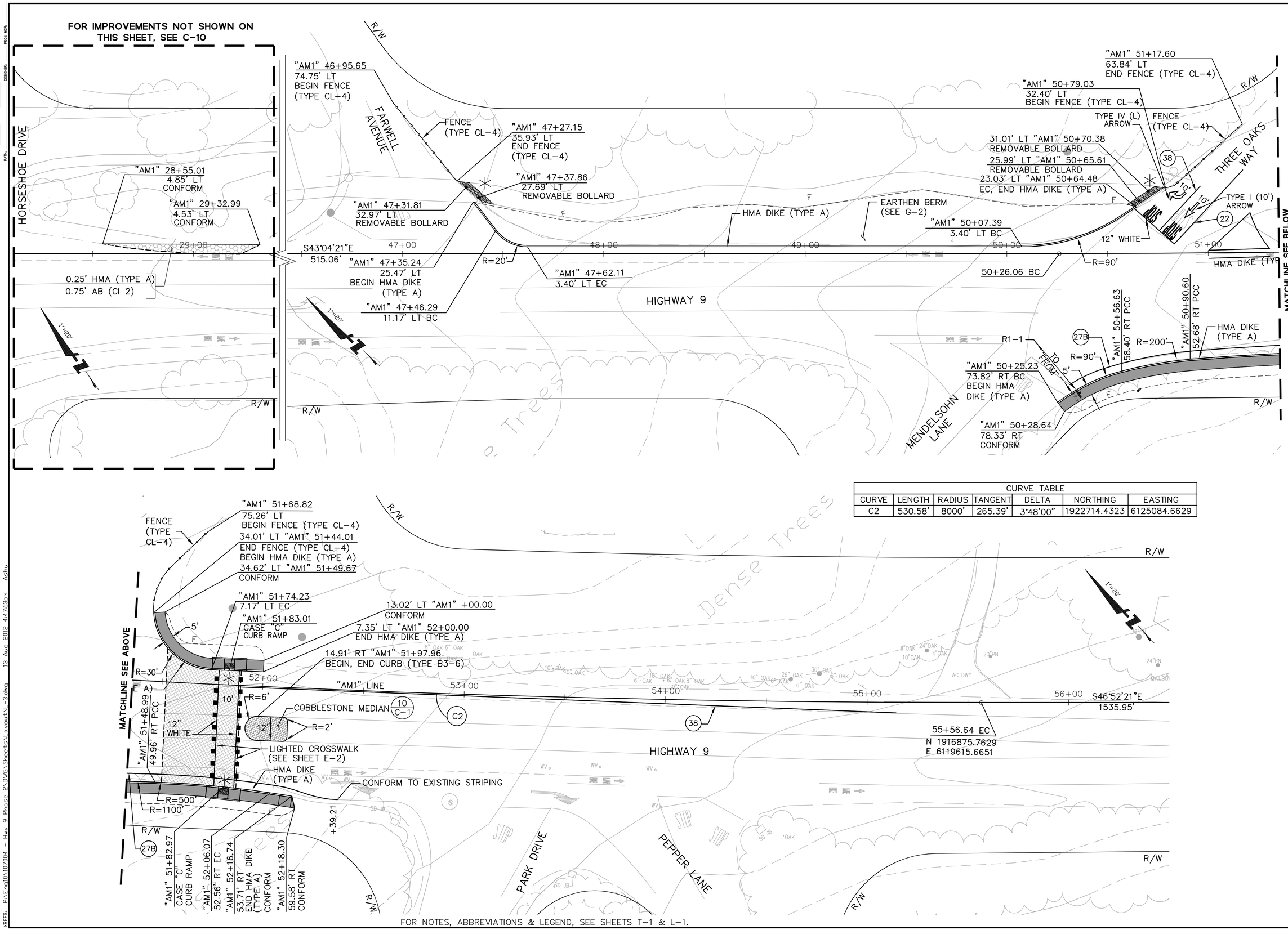

CURVE TABLE						
CURVE	LENGTH	RADIUS	TANGENT	DELTA	NORTHING	EASTING
C2	530.58'	8000'	265.39'	3°48'00"	1922714.4323	6125084.6629

FOR NOTES, ABBREVIATIONS & LEGEND, SEE SHEETS T-1 & L-1.

BKF
ENGINEERS / SURVEYORS / PLANNERS
1650 TECHNOLOGY DRIVE, SUITE 650
SAN JOSE, CA 95110
(408) 467-9100

Highway 9 Safety Improvement Project Phase 2 Layout

NO.	BY	DATE	REVISIONS:

DATE 8/1/2012

SCALE 1" = 20'

SHEET NO. L-3

N:\PPW\TLG36X24.dwg

XREFS: P:\Eng10\107004 - Hwy 9 Phase 2\DWG\Sheets\Layout\L-3.dwg 13 Aug 2012 4:47:13pm Ashu

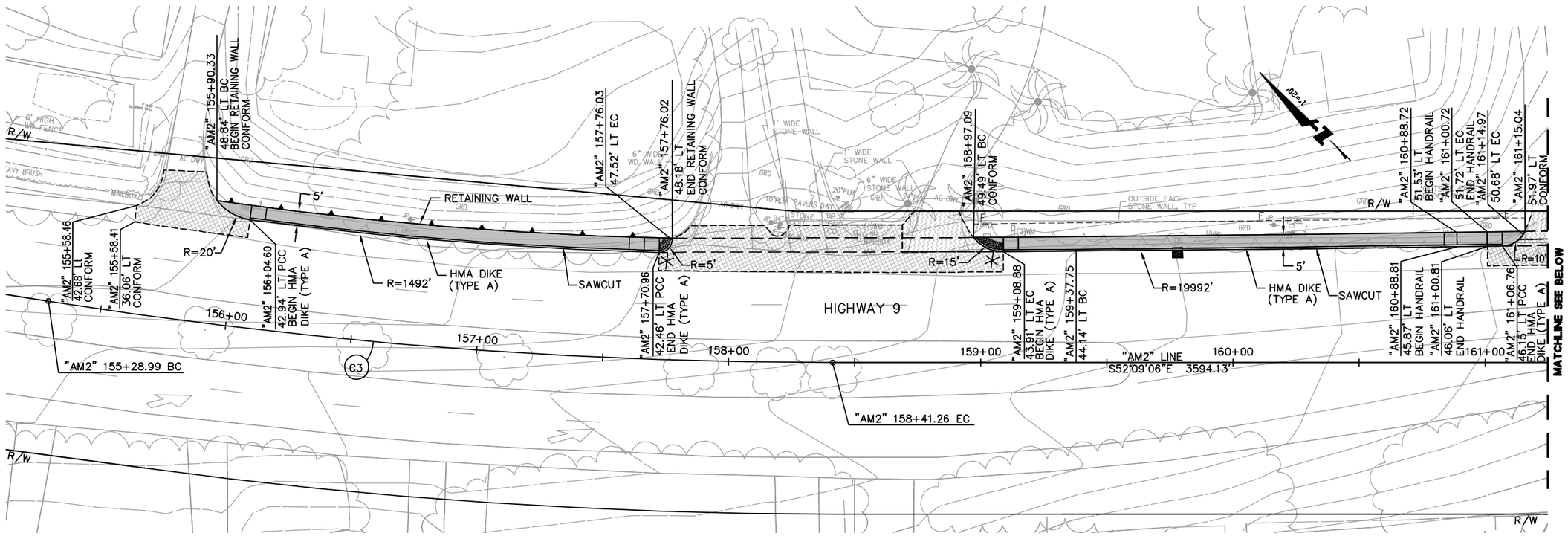

CURVE TABLE						
CURVE	LENGTH	RADIUS	TANGENT	DELTA	NORTHING	EASTING
C3	312.27'	2000'	156.45'	8°56'45"	1912829.6281	6129200.8013

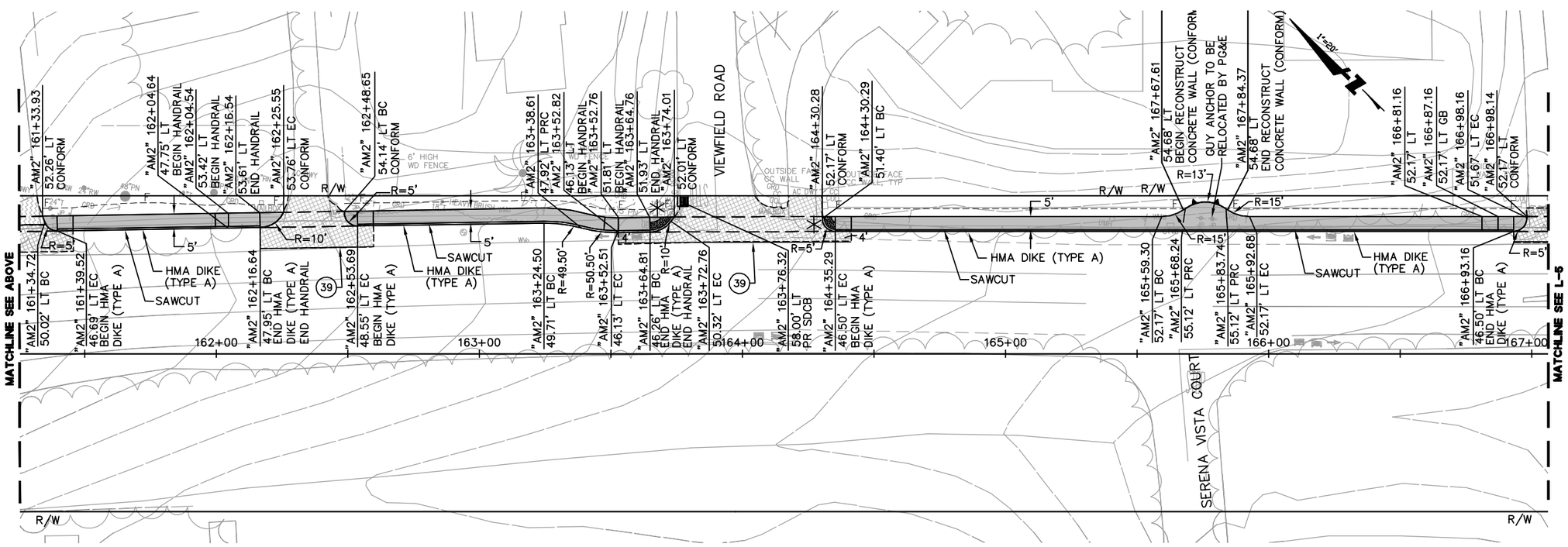

FOR NOTES, ABBREVIATIONS & LEGEND, SEE SHEETS T-1 & L-1.

BKF
Engineers | Surveyors | Planners
1650 TECHNOLOGY DRIVE, SUITE 650
SAN JOSE, CA. 95110
(408) 467-9100

Highway 9 Safety Improvement Project
Phase 2
Layout

NO.	BY	DATE	REVISIONS:

DATE
8/1/2012

SCALE
1" = 20'

SHEET NO.
L-4

N:\PPW\TLG36X24.dwg

XREFS: P:\Eng10\107004 - Hwy 9 Phase 2\DWG\Sheets\Layout\L-4.dwg 10 Aug 2012 3:46:24pm ASHU

DATE: _____ TIME: _____ DRAWING NAME: _____
SERVER: _____ SERVICE: _____ PLOTTING VIEW: _____
PATH: _____ DESIGNER: _____ PROJ. MGR: _____

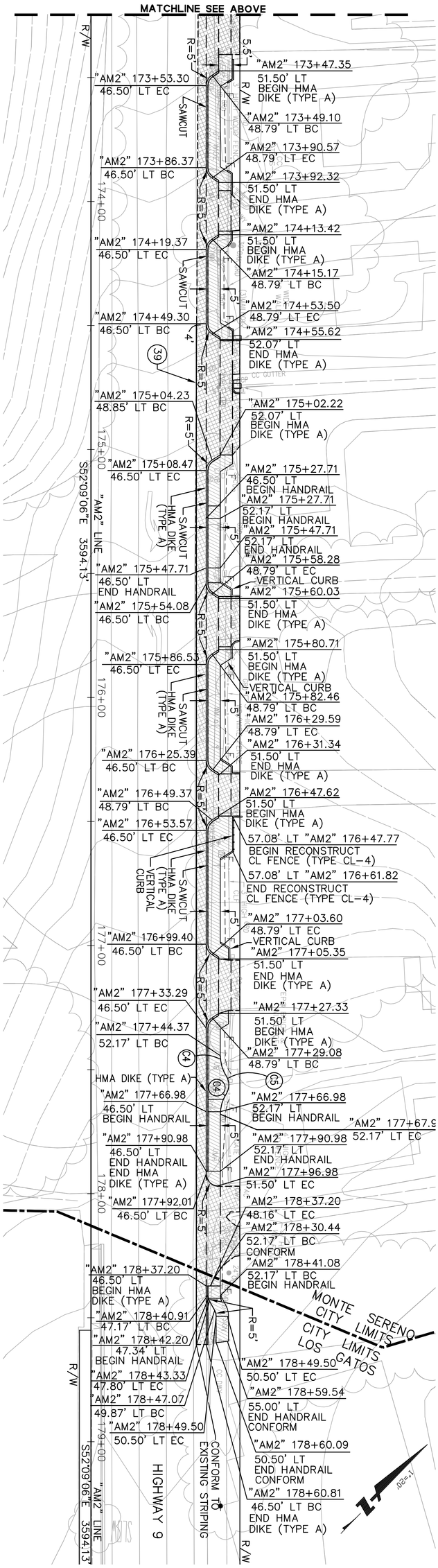

CURVE TABLE			
CURVE	LENGTH	RADIUS	TANGENT	DELTA
C4	8.48'	15'	4.36'	32°23'44"
C5	7.92'	7'	4.44'	64°47'28"

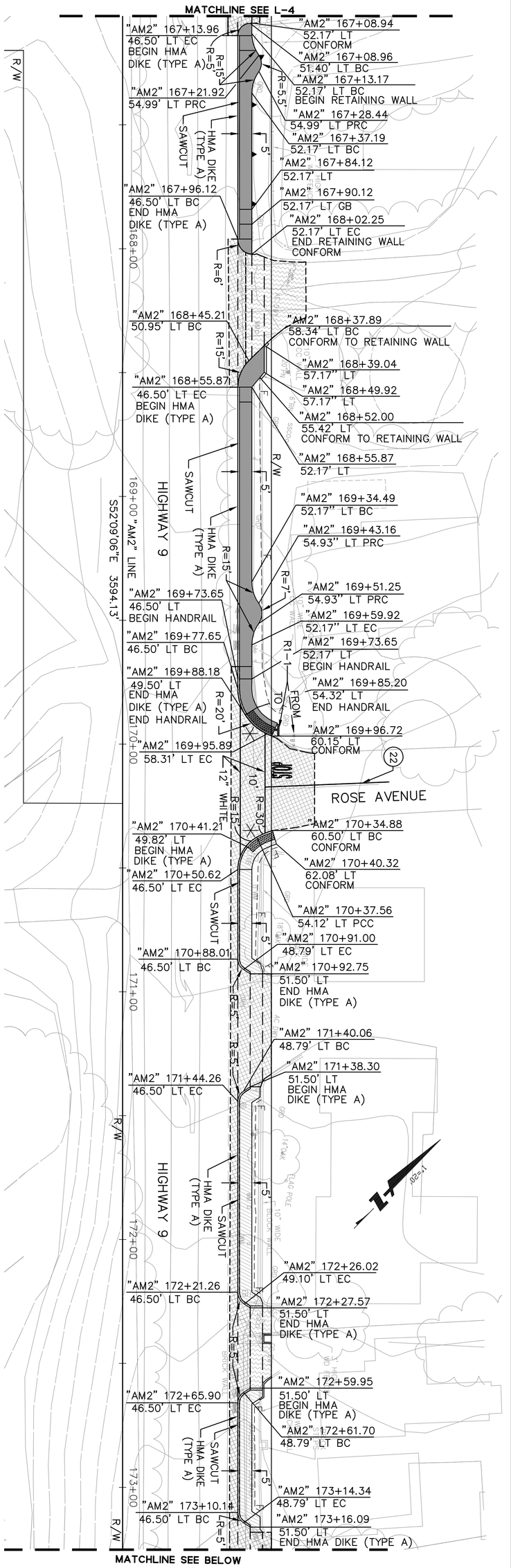

FOR NOTES, ABBREVIATIONS & LEGEND, SEE SHEETS T-1 & L-1.

N:\PPW\TLC36X24.dwg

NO.	BY	DATE	REVISIONS:

DATE 8/1/2012
SCALE 1" = 20'
SHEET NO. L-5

Highway 9 Safety Improvement Project
Phase 2
Layout

BKF
ENGINEERS / SURVEYORS / PLANNERS
1650 TECHNOLOGY DRIVE, SUITE 650
SAN JOSE, CA 95110
(408) 467-9100

NOTES:

1. FOR STATION OFFSET, AND CURVE OFFSET INFORMATION NOT PROVIDED ON THIS SHEET, REFER TO LAYOUT SHEETS.
2. ALL TC AND TD ELEVATIONS ARE REFERENCED TO THE TOP OF CURB OR TOP OF DIKE.
3. FOR DRIVEWAY DETAILS NOT SHOWN, INCLUDING CONFORM ELEVATION, SEE C-4 TO C-7.

LEGEND:

(490.77) CONFORM ELEVATION
490.00 PROPOSED ELEVATION
GRADE BREAK
CONFORM
HMA OVERLAY [0.15' TO 1.00' HMA (TYPE A)]
DRIVEWAY PVMT [0.50' HMA (TYPE A), 0.35' AB (CI 2)]
COBBLESTONE MEDIAN

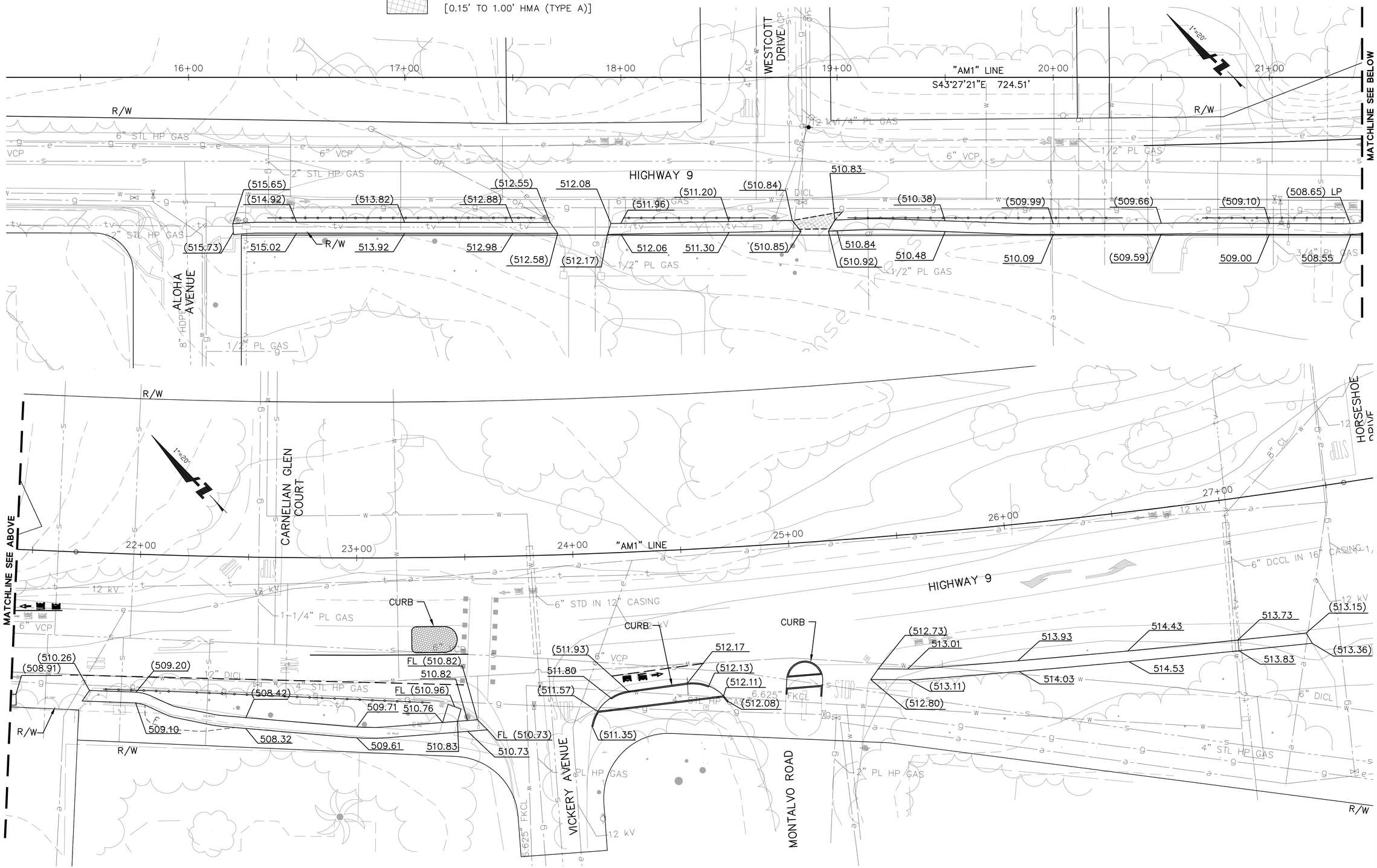

FOR NOTES, ABBREVIATIONS & LEGEND, SEE SHEETS T-1.

BKF ENGINEERS / SURVEYORS / PLANNERS
1650 TECHNOLOGY DRIVE, SUITE 650
SAN JOSE, CA 95110
(408) 467-9100

Highway 9 Safety Improvement Project Phase 2

Grading

NO.	BY	DATE	REVISIONS:

DATE 8/1/2012
SCALE 1" = 20'
SHEET NO. G-1

N: \PPW\TLG36X24.dwg

XREFS: P:\Eng10\107004 - Hwy 9 Phase 2\DWG\Sheets\Grading\G-1.dwg 13 Aug 2012 4:51:17pm Ashu

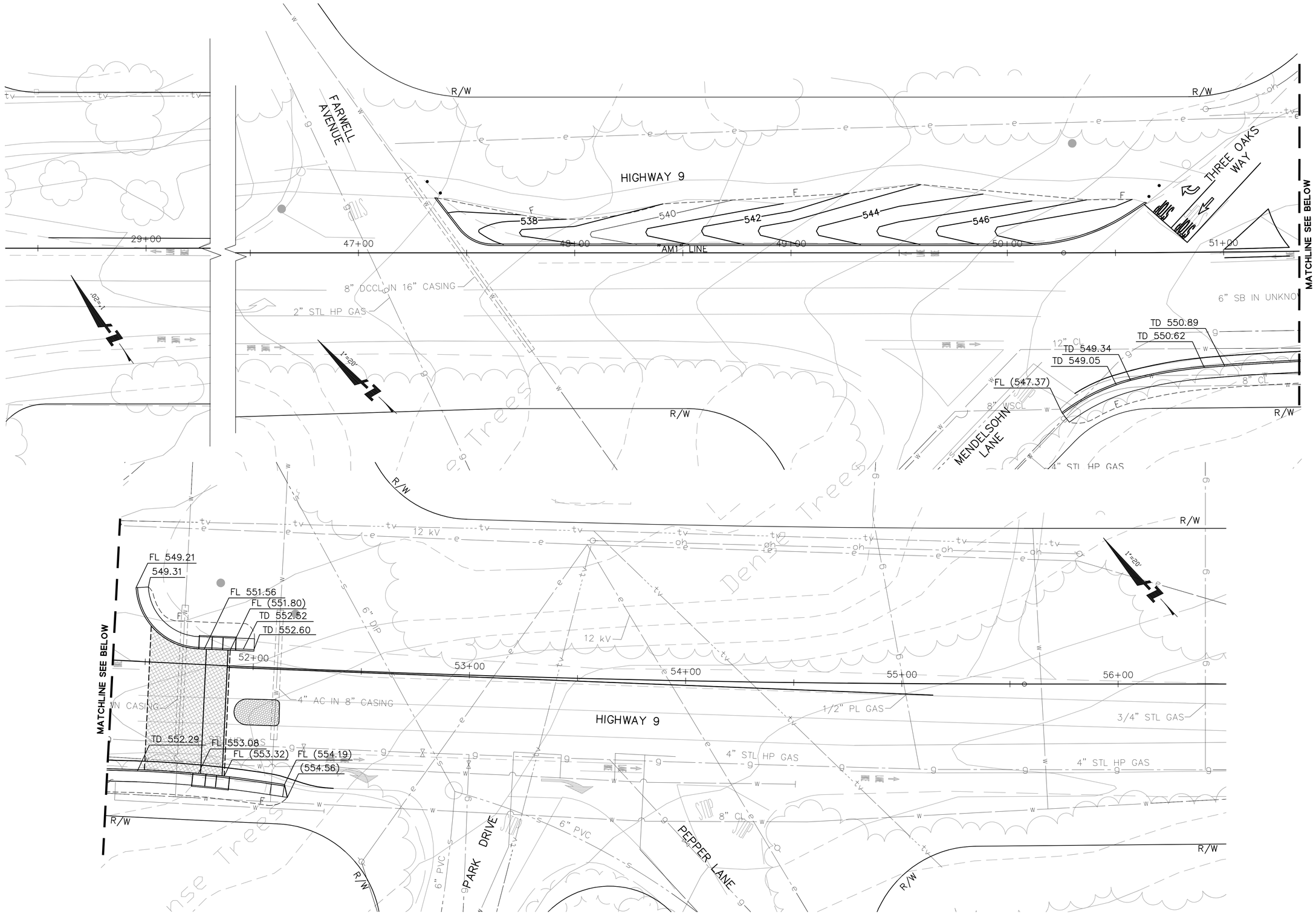

FOR NOTES, ABBREVIATIONS & LEGEND, SEE SHEETS T-1 & G-1.

BKF
ENGINEERS | SURVEYORS | PLANNERS
1650 TECHNOLOGY DRIVE, SUITE 650
SAN JOSE, CA 95110
(408) 467-9100

Highway 9 Safety Improvement Project
Phase 2
Grading

NO.	BY	DATE	REVISIONS:

DATE
8/1/2012

SCALE
1" = 20'

SHEET NO.
G-2

N:\PPW\TLG36X24.dwg

DATE: TIME: DRAWING NAME:
SERVER: SERVICE: PLOTTING VIEW: PROJ. MGR:
PATH: DESIGNER:
XREFS: P:\Eng10\107004 - Hwy 9 Phase 2\DWG\Sheets\Grading\G-2.dwg 01 Aug 2012 3:55:49pm Ashu

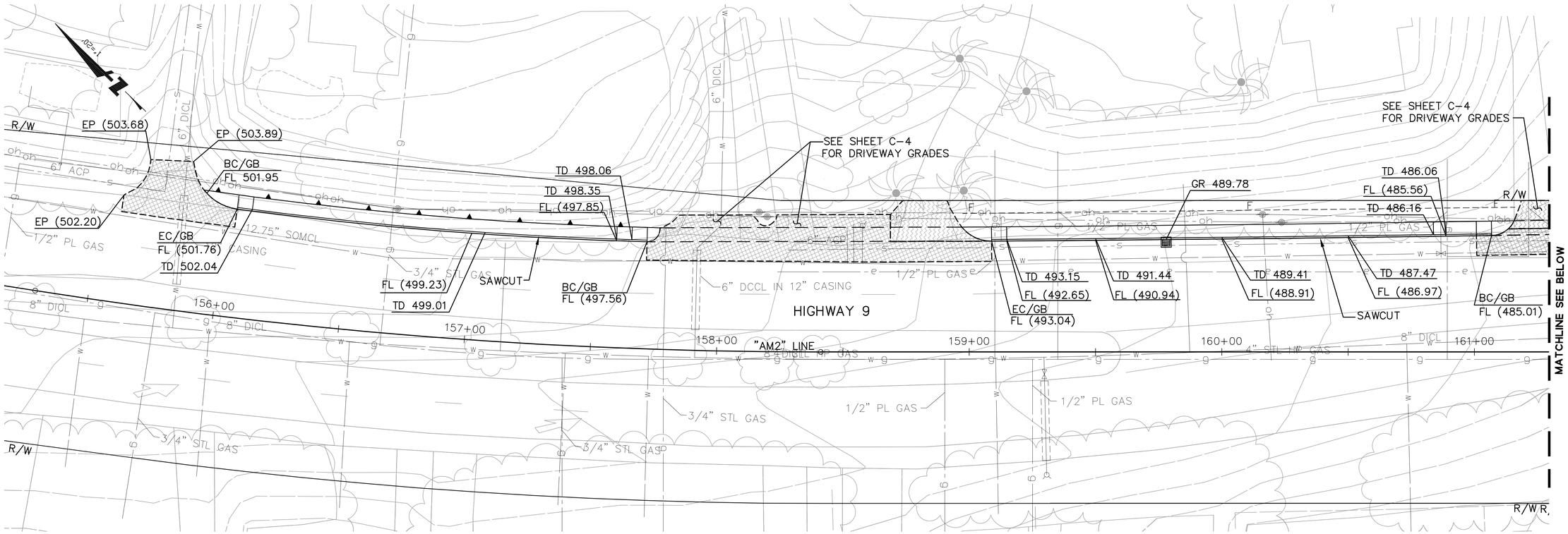

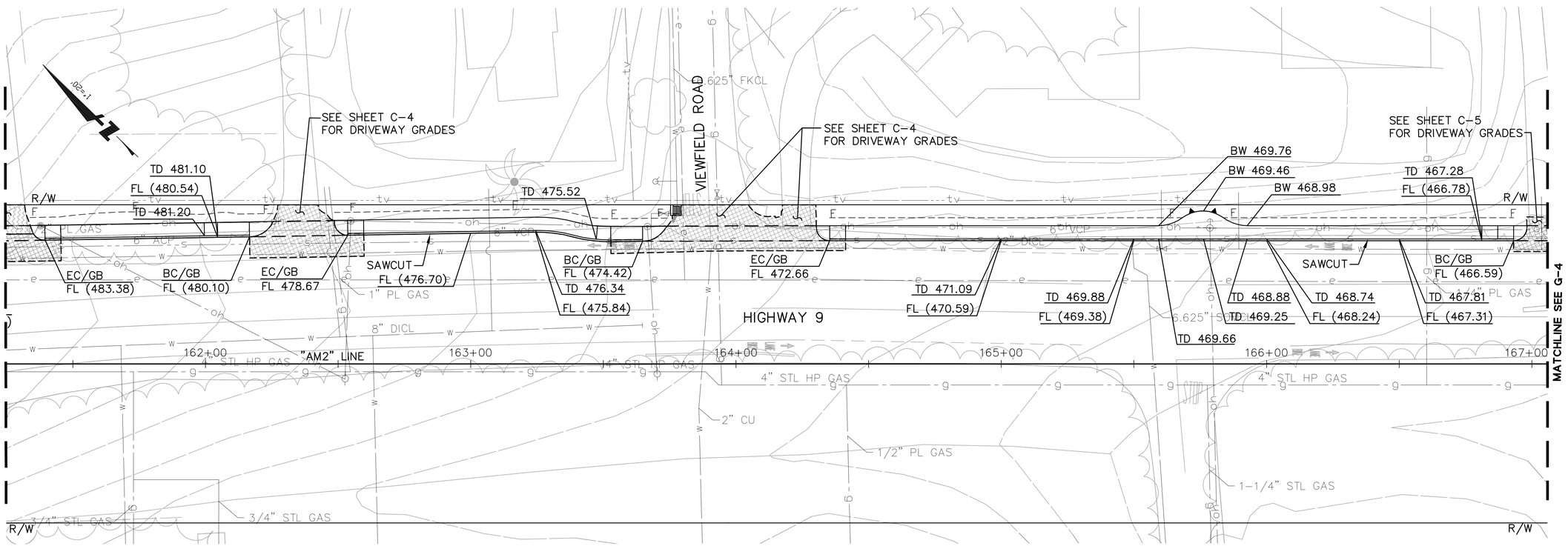

FOR NOTES, ABBREVIATIONS & LEGEND, SEE SHEETS T-1 & G-1.

BKF
ENGINEERS / SURVEYORS / PLANNERS
1650 TECHNOLOGY DRIVE, SUITE 650
SAN JOSE, CA 95110
(408) 467-9100

Highway 9 Safety Improvement Project Phase 2

Grading

NO.	BY	DATE	REVISIONS:

DATE 8/1/2012

SCALE 1" = 20'

SHEET NO. G-3

N:\PPW\TLG36X24.dwg

DATE: TIME: DRAWING NAME: PROJ. MGR.
SERVER: SERVICE: PLOTTING VIEW
PATH: DESIGNER:

XREFS: P:\Eng10\107004 - Hwy 9 Phase 2\DWG\Sheets\Grading\G-3.dwg 13 Aug 2012 9:17:30am Ashu

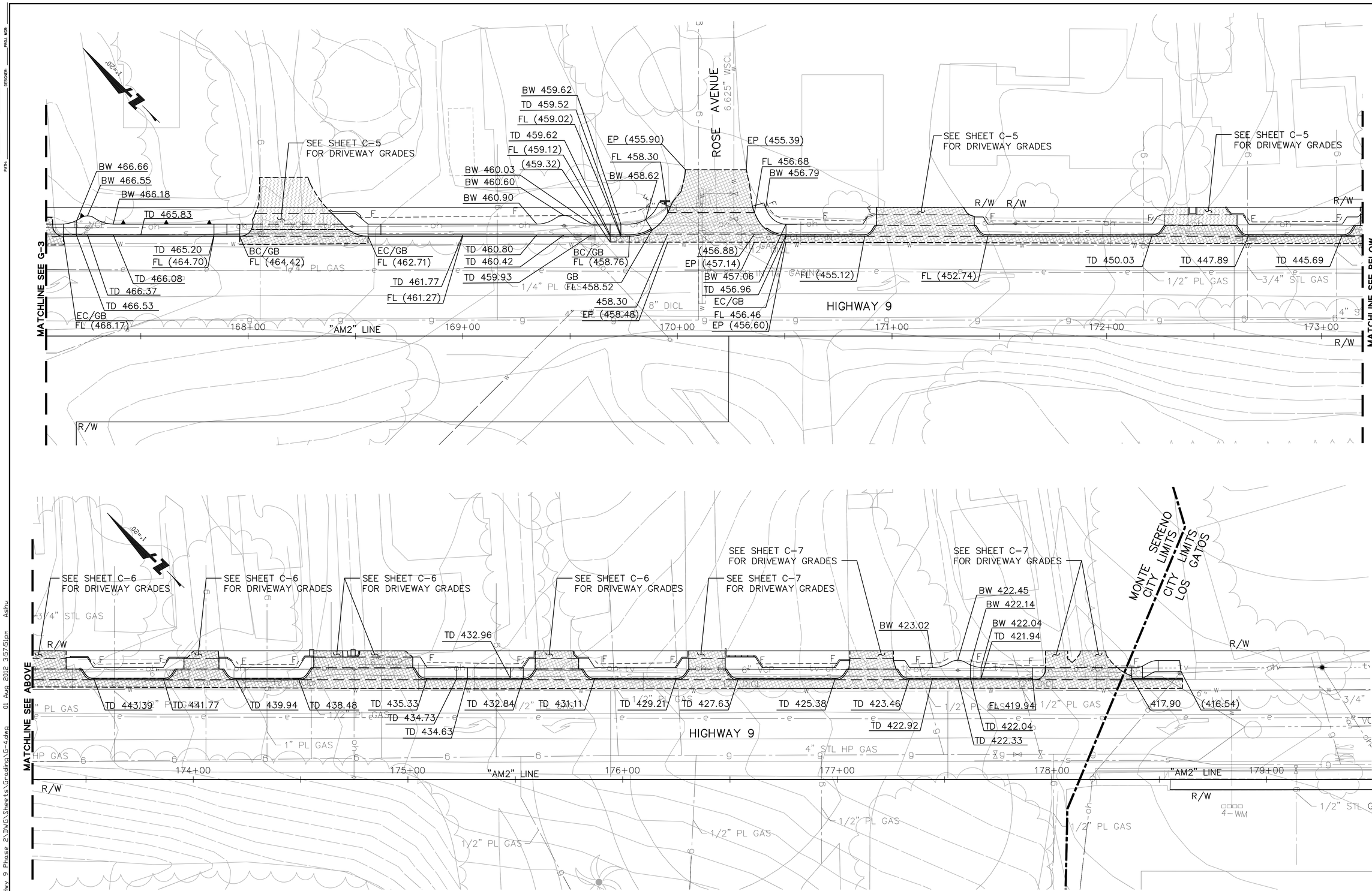

FOR NOTES, ABBREVIATIONS & LEGEND, SEE SHEETS T-1 & G-1.

BKF
ENGINEERS | SURVEYORS | PLANNERS
1650 TECHNOLOGY DRIVE, SUITE 650
SAN JOSE, CA 95110
(408) 467-9100

Highway 9 Safety Improvement Project
Phase 2
Grading

NO.	BY	DATE	REVISIONS:

DATE
8/1/2012

SCALE
1" = 20'

SHEET NO.
G-4

N:\PPW\TLG36X24.dwg

XREFS: P:\Eng10\107004 - Hwy 9 Phase 2\DWG\Sheets\Grading\G-4.dwg 01 Aug 2012 3:57:51pm Ashu

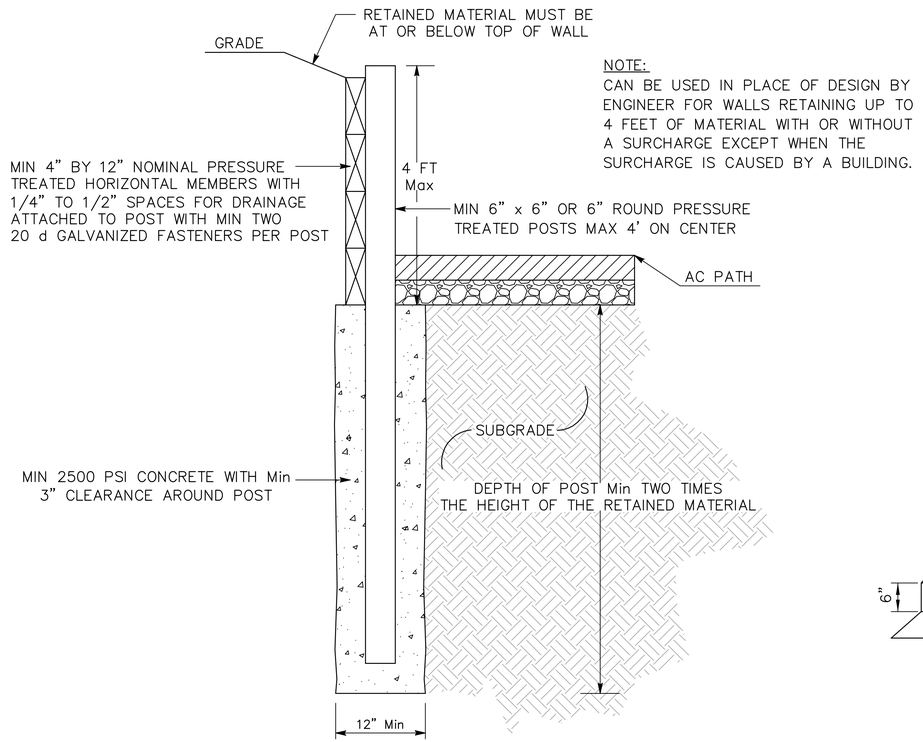

NOTE:
CAN BE USED IN PLACE OF DESIGN BY ENGINEER FOR WALLS RETAINING UP TO 4 FEET OF MATERIAL WITH OR WITHOUT A SURCHARGE EXCEPT WHEN THE SURCHARGE IS CAUSED BY A BUILDING.

WOOD RETAINING WALL DETAIL (1/–)

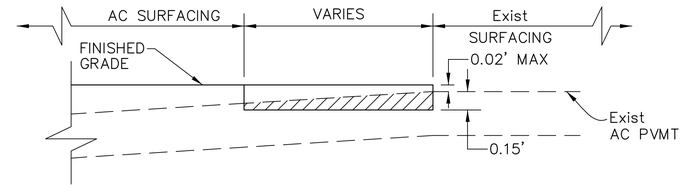

CONFORM DETAIL TYPE 1 (2/–)

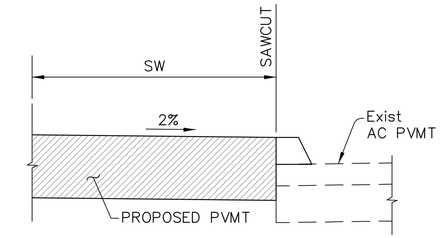

CONFORM DETAIL TYPE 2 (3/–)

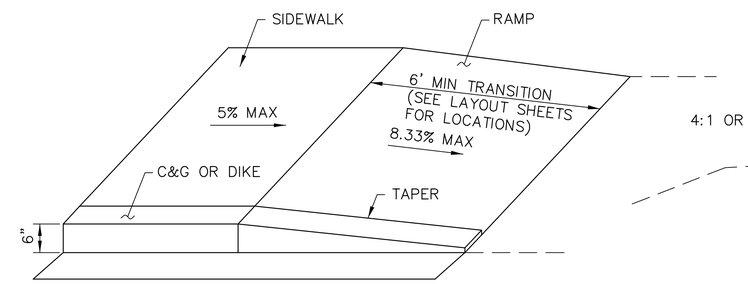

CURB RAMP & TAPER DETAIL (4/–)

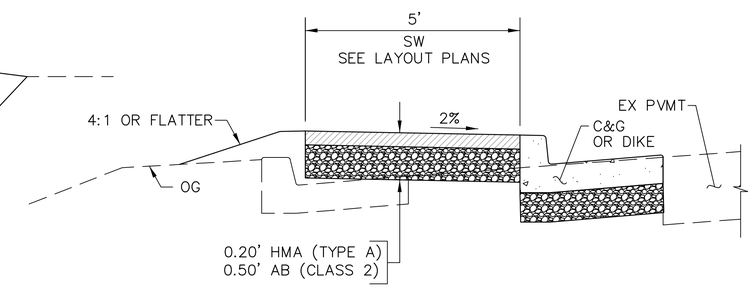

SIDEWALK DETAIL (5/–)

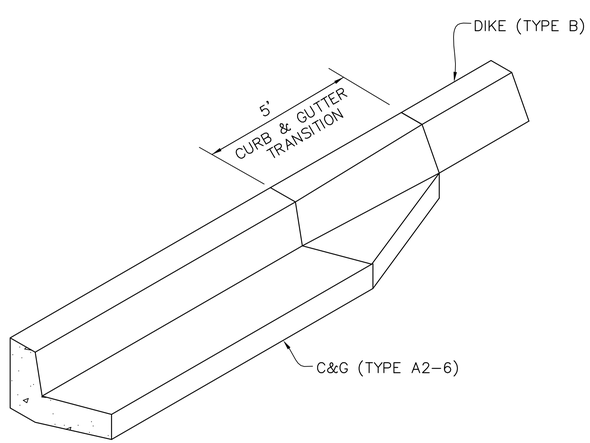

CURB & GUTTER TRANSITION DETAIL (8/–)

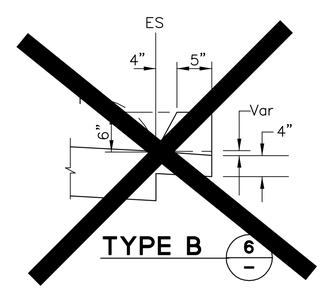

TYPE B (6/–)

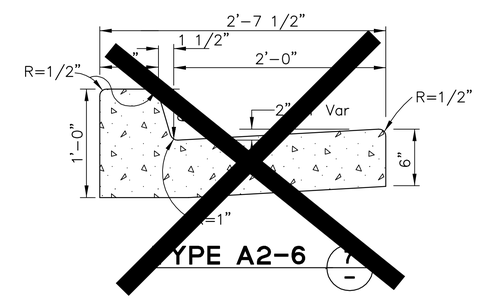

TYPE A2-6 (7/–)

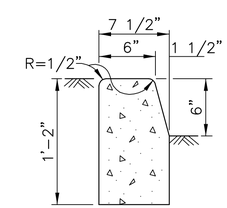

TYPE A1-6 (9/–)

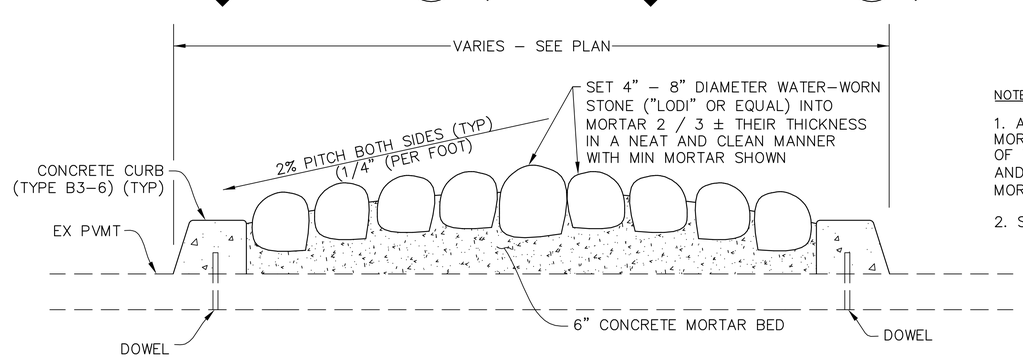

NOTE:

1. AFTER THE COBBLESTONE HAS BEEN SET INTO THE MORTAR THE EXCESSIVE MORTAR IN BETWEEN THE JOINTS OF THE COBBLESTONE SHALL BE CAREFULLY REMOVED AND RAKED IN A SMOOTH JOINT (NO PROTRUSION OF MORTAR WILL BE ALLOWED).

2. SEAL FINAL SURFACE WITH WATER SEALER.

COBBLESTONE MEDIAN (TYPE 1) (10/–)

BKF
ENGINEERS / SURVEYORS / PLANNERS
1650 TECHNOLOGY DRIVE, SUITE 650
SAN JOSE, CA 95110
(408) 467-9100

Highway 9 Safety Improvement Project
Phase 2
Construction Details

NO.	BY	DATE	REVISIONS:

DATE 8/1/2012
SCALE NO SCALE
SHEET NO. C-1

DRAWING NAME: PLOTTING VIEW: DESIGNER: PROJ. MGR:
TIME: SERVICE: DATE: SERVER: PATH:
XREFS: P:\Eng10\107004 - Hwy 9 Phase 2\DWG\Sheets\Construction Details\CD-1.dwg 13 Aug 2012 4:53:12pm Ashu
N:\PPW\TLG36X24.dwg

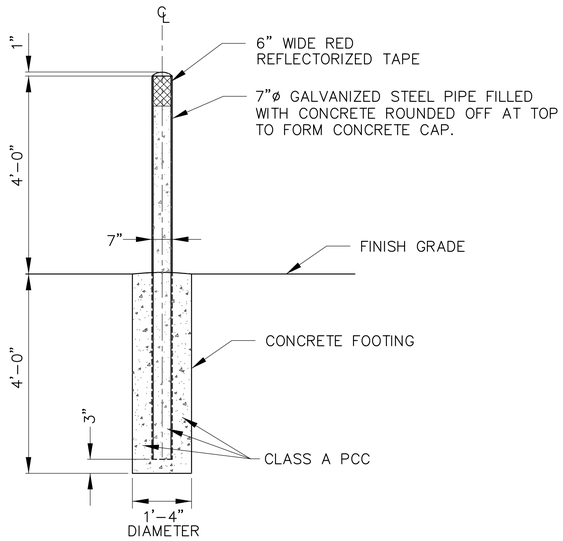

BOLLARD

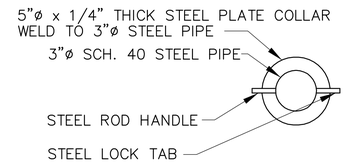

BOLLARD PLAN VIEW

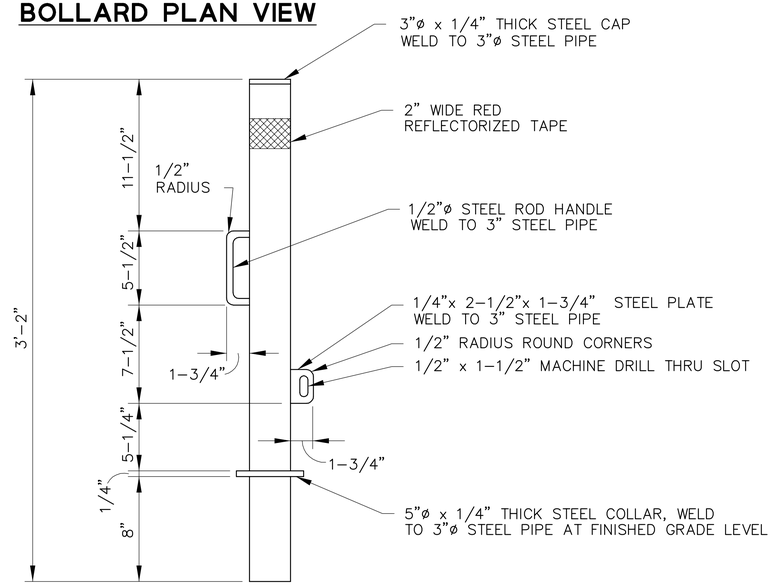

BOLLARD ELEVATION

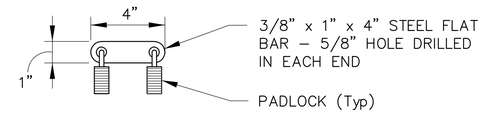

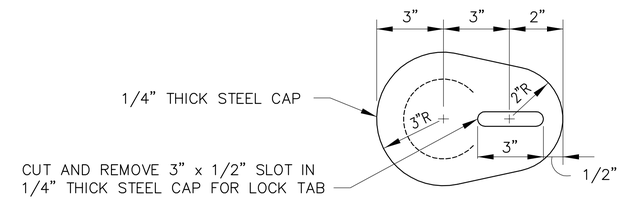

LID TOP VIEW

TOP VIEW

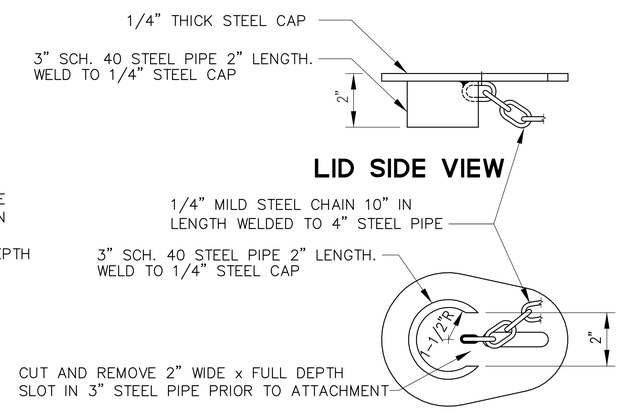

LID SIDE VIEW

LID BOTTOM VIEW

STEEL LID (B)

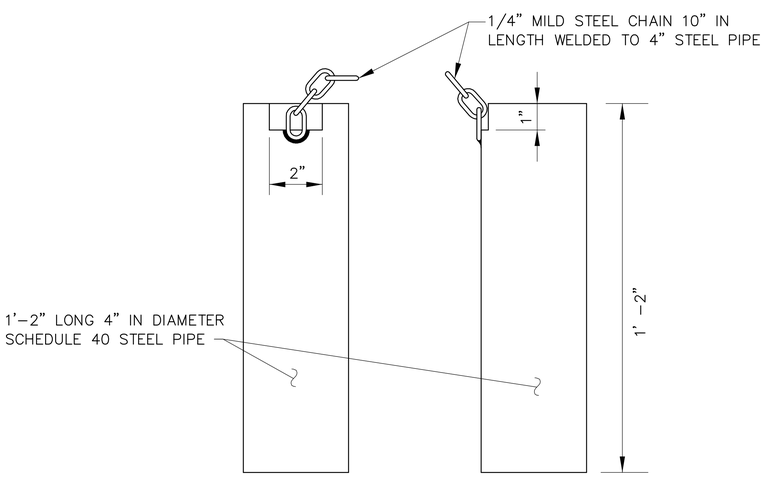

FRONT VIEW SIDE VIEW

PIPE SLEEVE (A)

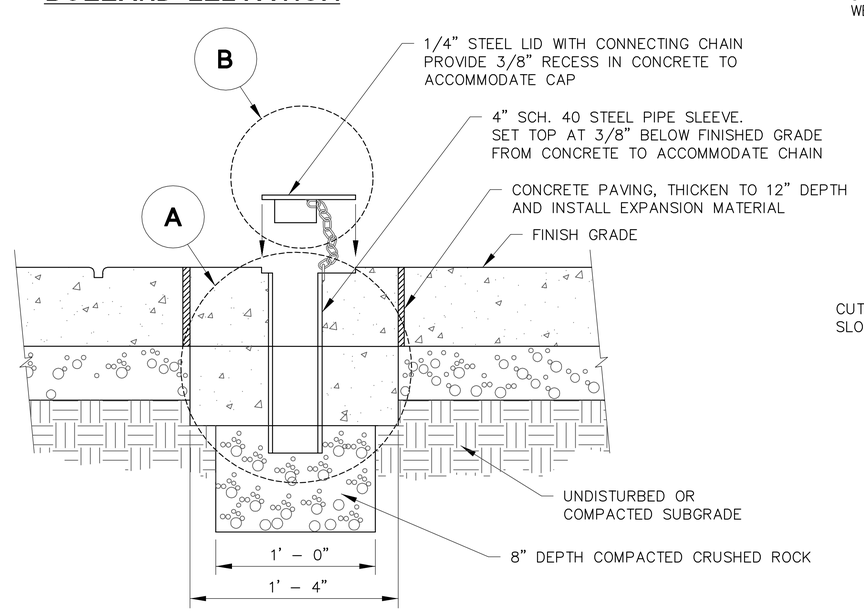

SLEEVE IN CONCRETE SECTION VIEW

REMOVABLE BOLLARD (B)

BKF
ENGINEERS / SURVEYORS / PLANNERS
1650 TECHNOLOGY DRIVE, SUITE 650
SAN JOSE, CA 95110
(408) 467-9100

Highway 9 Safety Improvement Project
Phase 4
Construction Details

NO.	BY	DATE	REVISIONS:

DATE 10/17/2011
SCALE NO SCALE
SHEET NO. C-2

N: \PPW\TLG36X24.dwg

DATE: TIME: DRAWING NAME:
SERVER: SERVICE: PLOTTING VIEW: PROJ. MGR:
PATH: DESIGNER:

XREFS: P:\Eng10\107004 - Hwy 9 Phase 2\DWG\Sheets\Construction Details\CD-2.dwg 01 Aug 2012 4:01:18pm Ashu

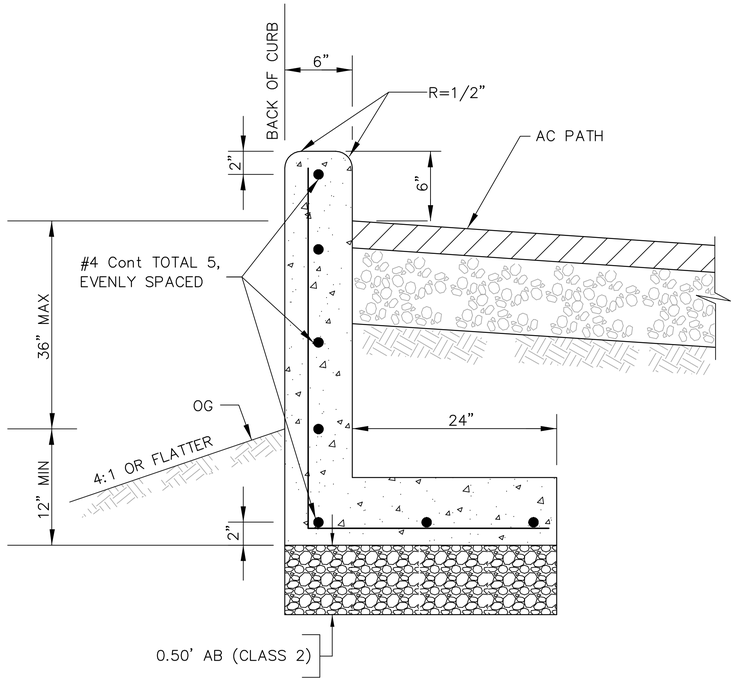

VERTICAL CURB (1/–)

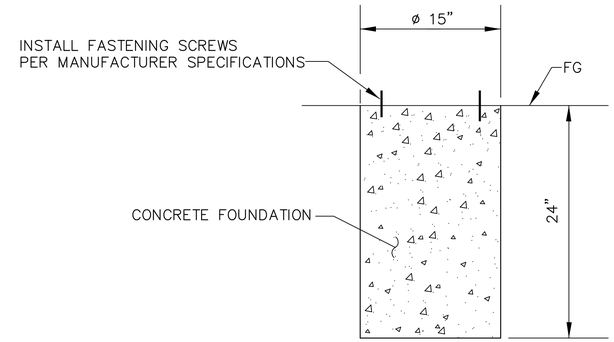

PEDESTRIAN LIGHTING FOUNDATION (3/–)

NOTE:
THE EDGE OF THE DETECTABLE WARNING SURFACE NEAREST THE STREET SHALL BE BETWEEN 6" AND 8" FROM THE GUTTER FLOWLINE.

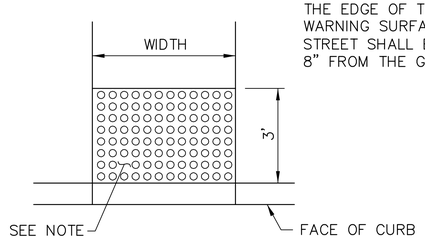

DETECTABLE WARNING SURFACE (2/–)

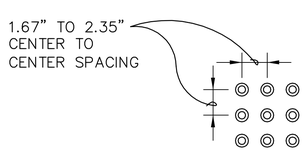

RAISED TRUNCATED DOME PATTERN (IN-LINE) DETECTABLE WARNING SURFACE

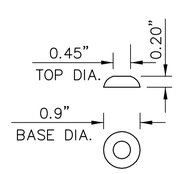

RAISED TRUNCATED DOME

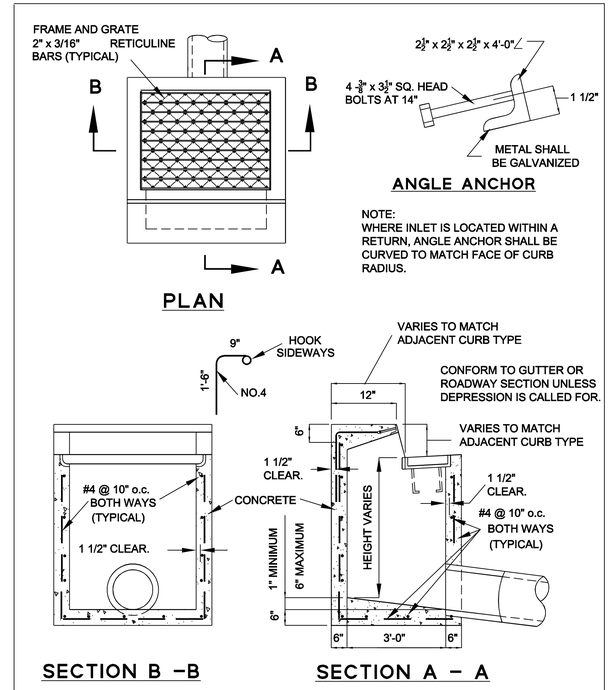

APPROVED BY	DATE		STANDARD CURB INLET	STD. PLAN NO.
	JUNE 2004			301
TOWN ENGINEER				

SD-301.DWG

BKF
ENGINEERS / SURVEYORS / PLANNERS
1650 TECHNOLOGY DRIVE, SUITE 650
SAN JOSE, CA 95110
(408) 467-9100

Highway 9 Safety Improvement Project Phase 2

Construction Details

NO.	BY	DATE	REVISIONS:

DATE 8/1/2012

SCALE NO SCALE

SHEET NO. C-3

N: \PPW\TLG36X24.dwg

DATE: TIME: DRAWING NAME:
SERVER: SERVICE: PLOTTING VIEW: PROJ. MGR:
PATH: DESIGNER:
XREFS: P:\Eng10\107004 - Hwy 9 Phase 2\DWG\Sheets\Construction Details\CD-3.dwg 13 Aug 2012 4:53:59pm Ashu

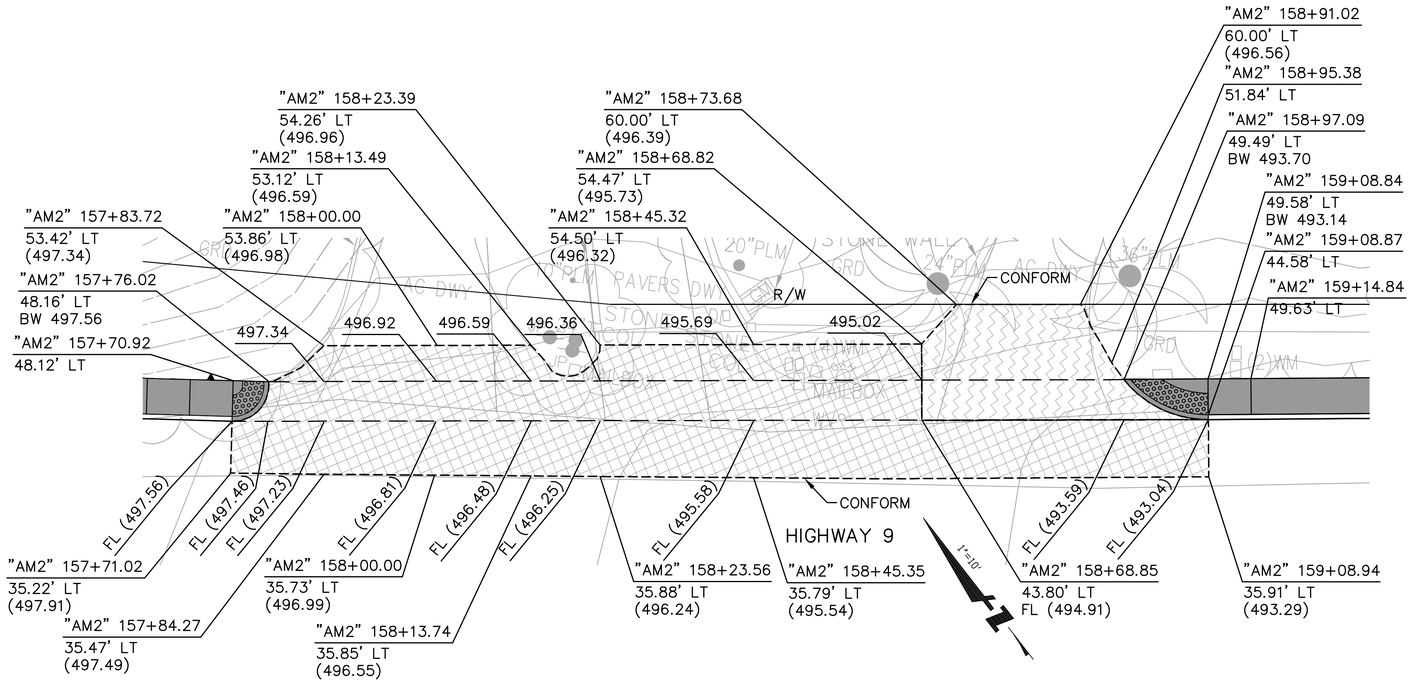

DRIVEWAYS @ STA 158+50

SCALE: 1"=10'

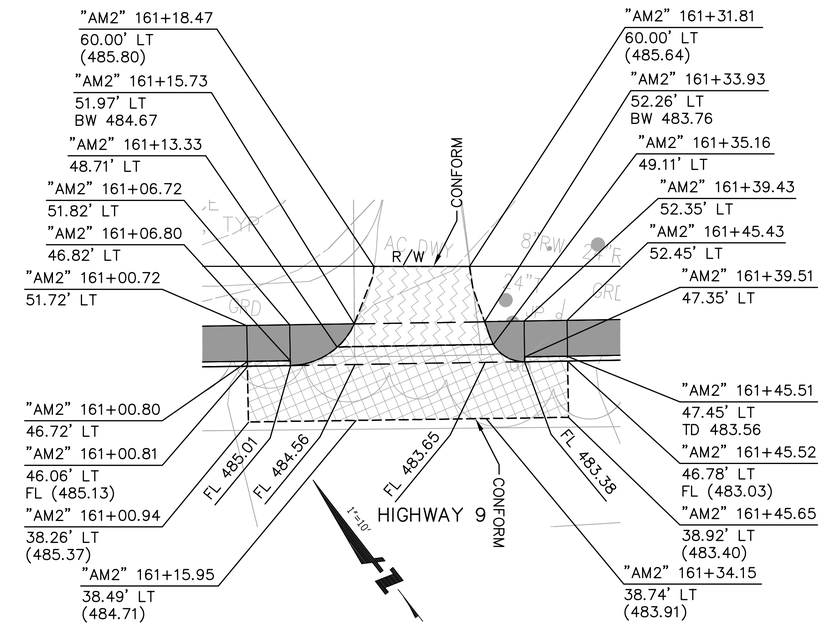

DRIVEWAY @ STA 161+20

SCALE: 1"=10'

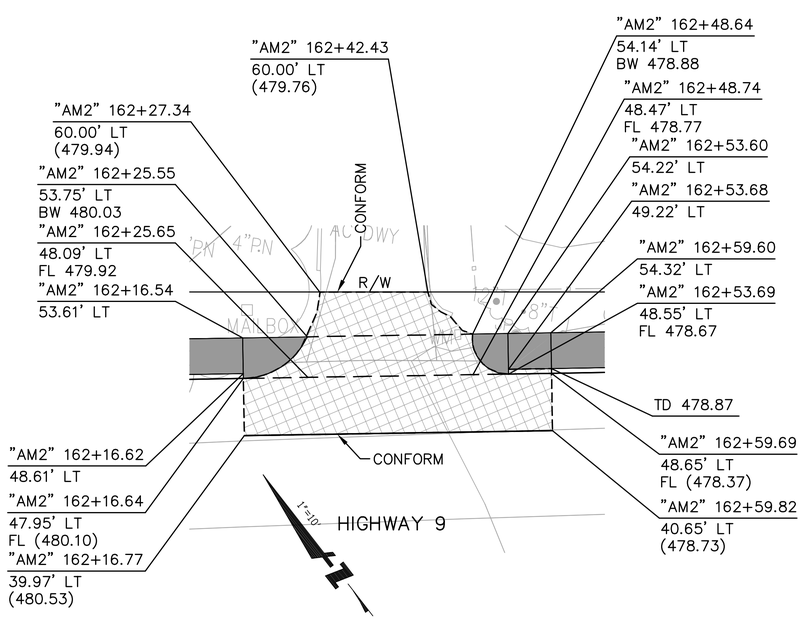

DRIVEWAY @ STA 162+30

SCALE: 1"=10'

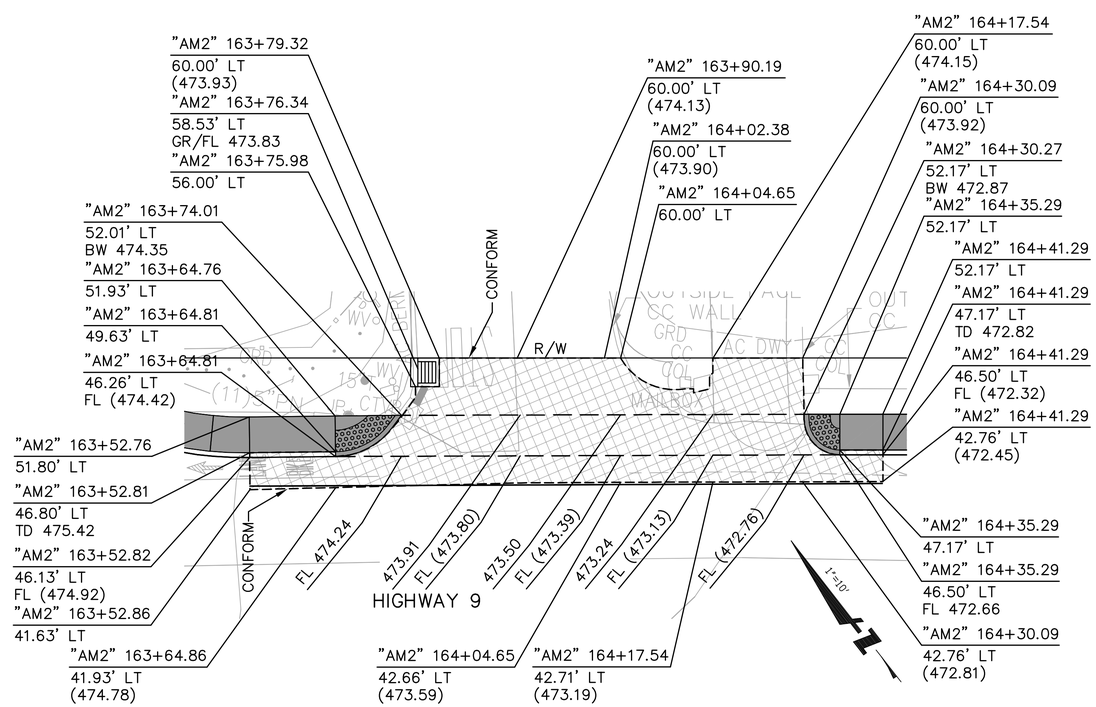

DRIVEWAYS @ STA 163+90

SCALE: 1"=10'

BKF
ENGINEERS / SURVEYORS / PLANNERS
1650 TECHNOLOGY DRIVE, SUITE 650
SAN JOSE, CA 95110
(408) 467-9100

Highway 9 Safety Improvement Project
Phase 2
Construction Details

NO.	BY	DATE	REVISIONS:

DATE
8/1/2012

SCALE
AS SHOWN

SHEET NO.
C-4

N: \PPW\TLG36X24.dwg

DATE: TIME: DRAWING NAME: PROJ. MGR:
SERVER: SERVICE: PLOTTING VIEW:
PATH: DESIGNER:

XREFS: P:\Eng10\107004 - Hwy 9 Phase 2\DWG\Sheets\Construction Details\CD-4.dwg 13 Aug 2012 4:55:15pm Ashu

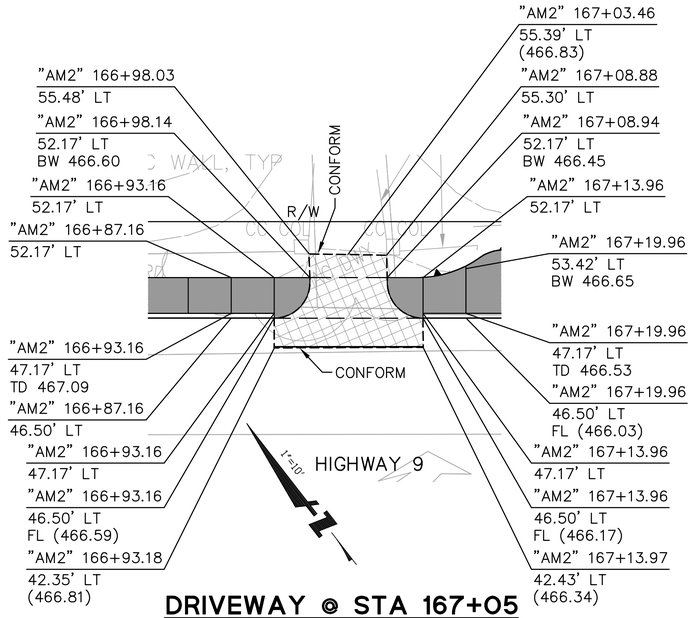

DRIVEWAY @ STA 167+05

SCALE: 1"=10'

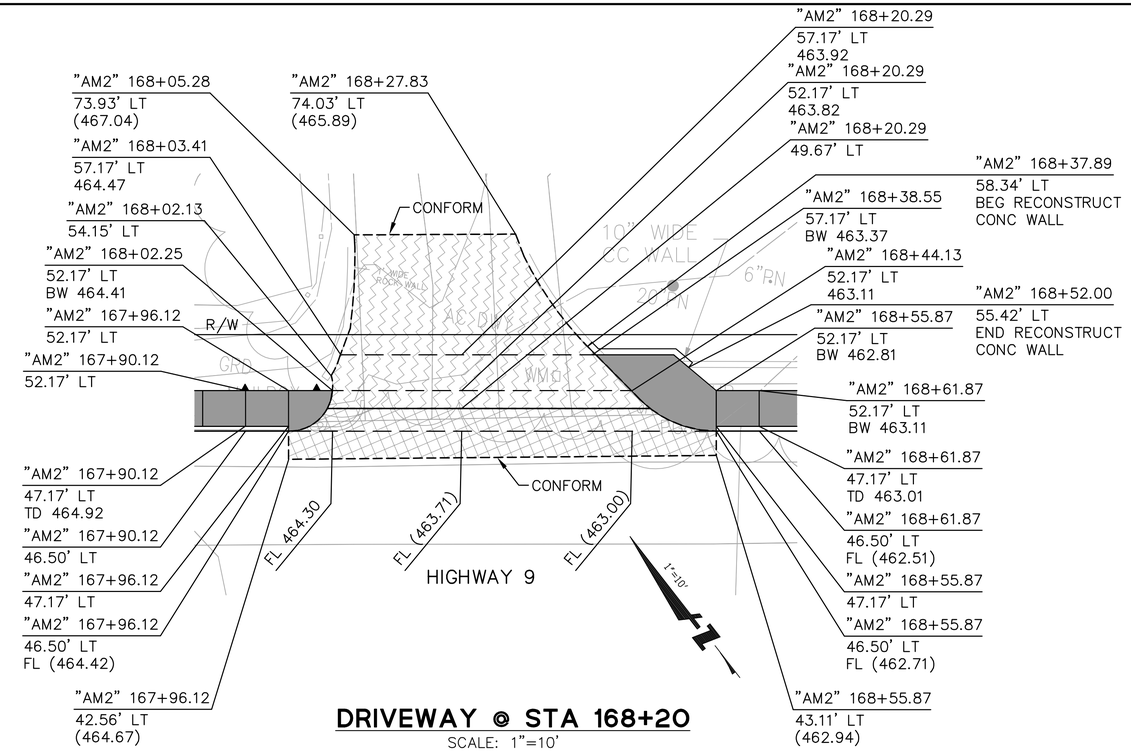

DRIVEWAY @ STA 168+20

SCALE: 1"=10'

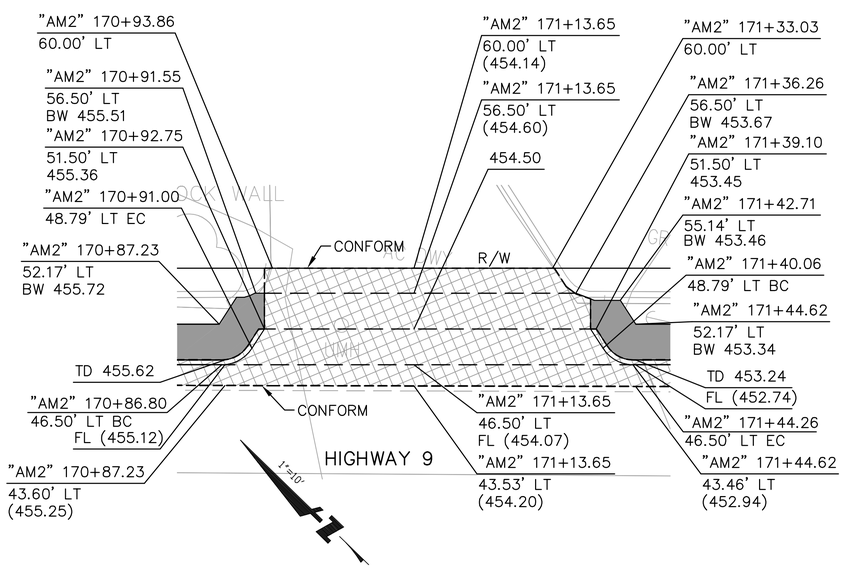

DRIVEWAY @ STA 171+15

SCALE: 1"=10'

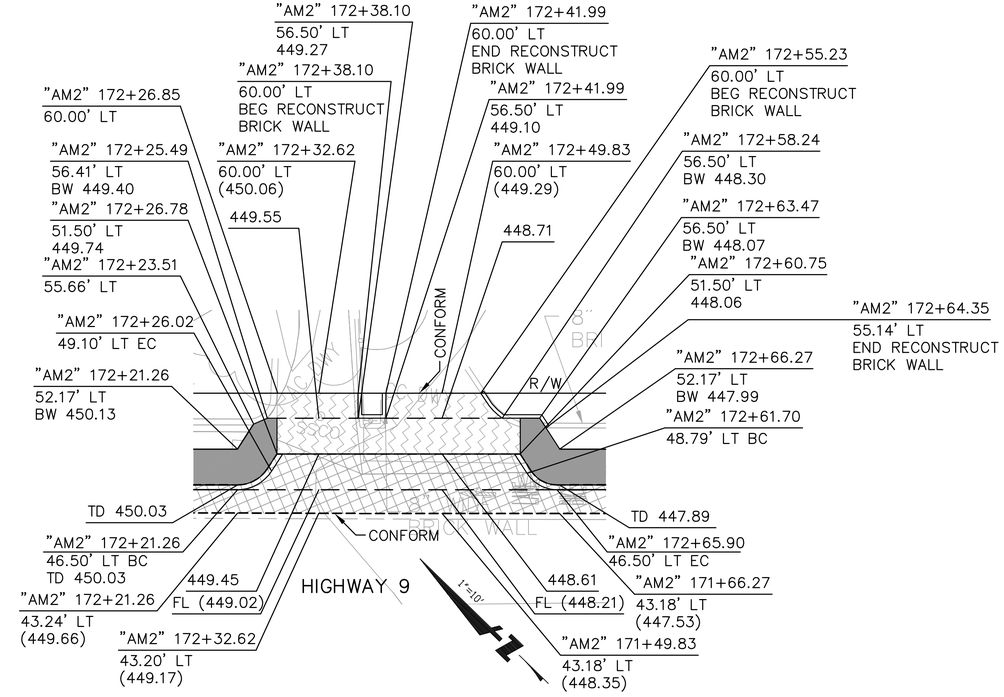

DRIVEWAYS @ STA 172+40

SCALE: 1"=10'

BKF
ENGINEERS / SURVEYORS / PLANNERS
1650 TECHNOLOGY DRIVE, SUITE 650
SAN JOSE, CA 95110
(408) 467-9100

Highway 9 Safety Improvement Project Phase 2

Construction Details

NO.	BY	DATE	REVISIONS:

DATE 8/1/2012

SCALE AS SHOWN

SHEET NO. C-5

DATE: TIME: DRAWING NAME:
SERVER: SERVICE: PLOTTING VIEW: PROJ. MGR:
PATH: DESIGNER:
XREFS: P:\Eng10\107004 - Hwy 9 Phase 2\DWG\Sheets\Construction Details\CD-5.dwg 01 Aug 2012 4:05:49pm Ashu
N:\PPW\TLG36X24.dwg

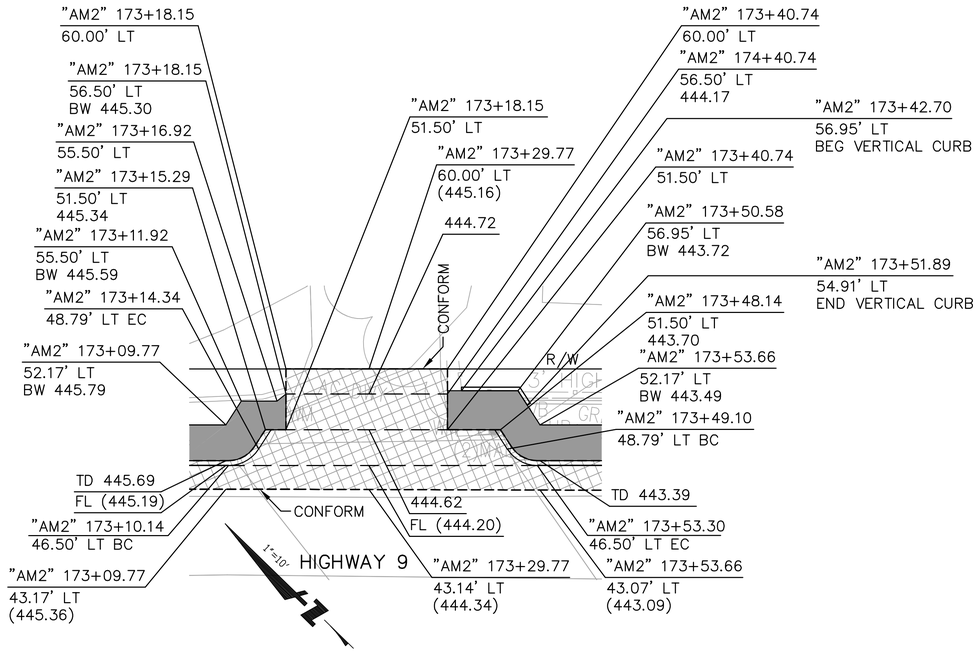

DRIVEWAY @ STA 173+30

SCALE: 1"=10'

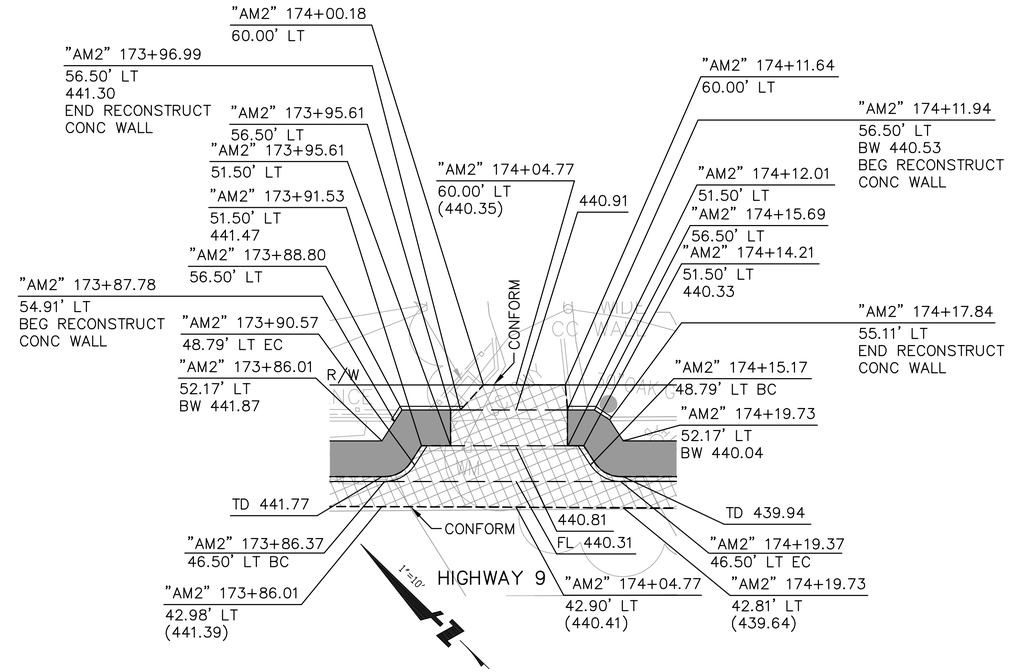

DRIVEWAY @ STA 174+05

SCALE: 1"=10'

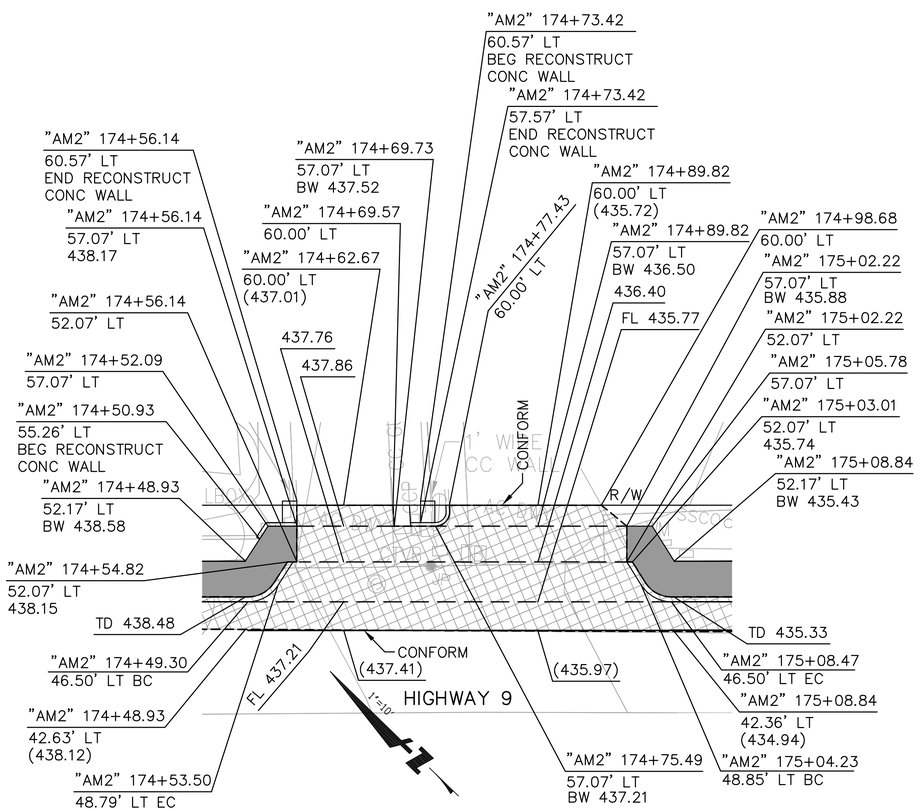

DRIVEWAYS @ STA 174+80

SCALE: 1"=10'

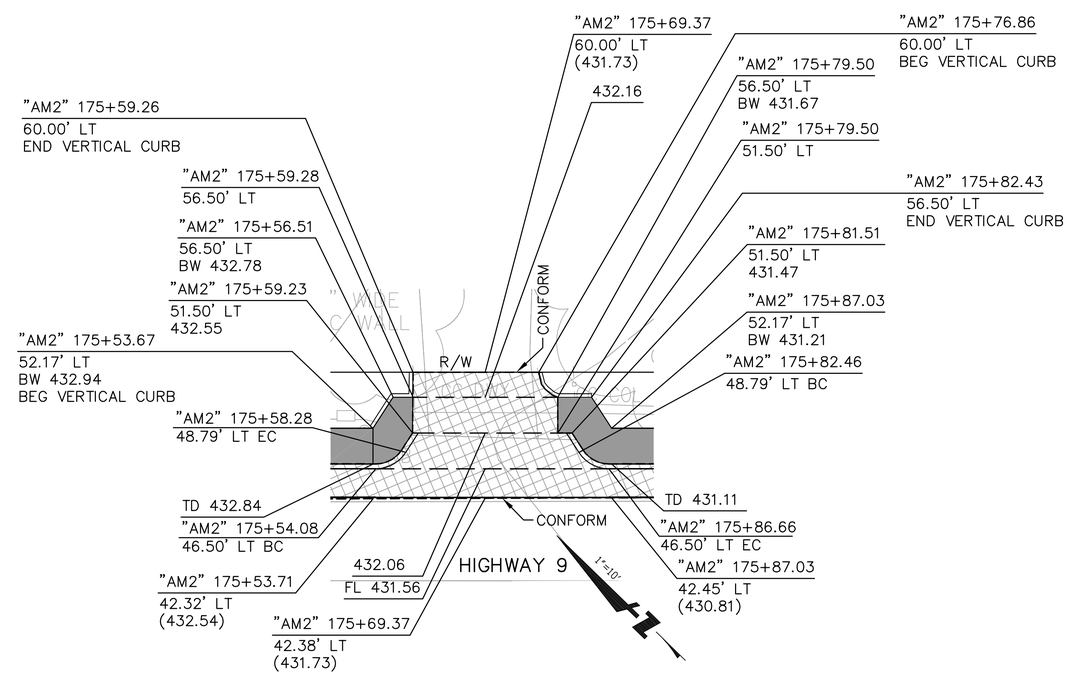

DRIVEWAY @ STA 175+70

SCALE: 1"=10'

BKF
ENGINEERS | SURVEYORS | PLANNERS
1650 TECHNOLOGY DRIVE, SUITE 650
SAN JOSE, CA 95110
(408) 467-9100

Highway 9 Safety Improvement Project
Phase 2
Construction Details

NO.	BY	DATE	REVISIONS:

DATE
8/1/2012

SCALE
AS SHOWN

SHEET NO.
C-6

N:\PPW\TLG36X24.dwg

DATE: TIME: DRAWING NAME: PROJ. MGR:
SERVER: SERVICE: PLOTTING VIEW: DESIGNER:
PATH:

XREFS: P:\Eng10\107004 - Hwy 9 Phase 2\DWG\Sheets\Construction Details\CD-6.dwg 01 Aug 2012 4:07:02pm Ashu

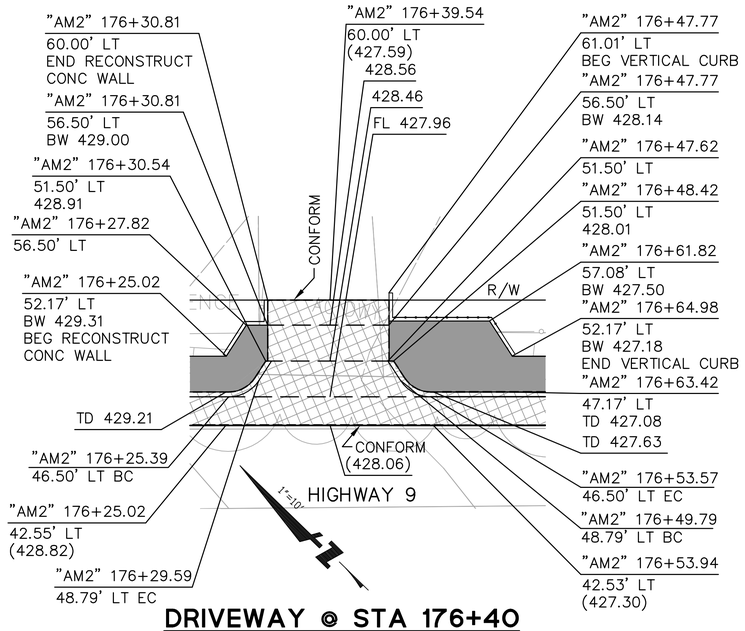

DRIVEWAY @ STA 176+40

SCALE: 1"=10'

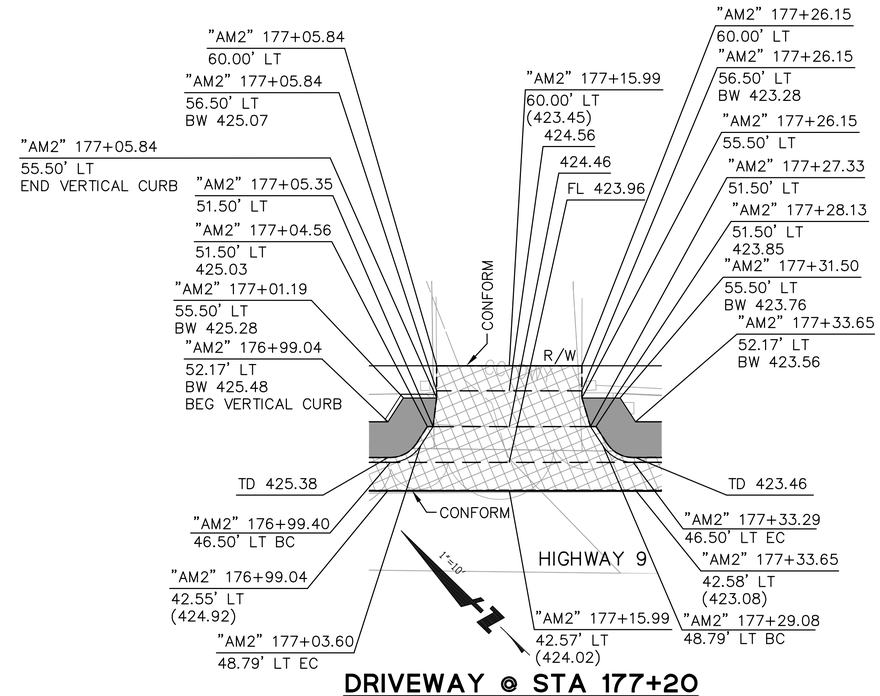

DRIVEWAY @ STA 177+20

SCALE: 1"=10'

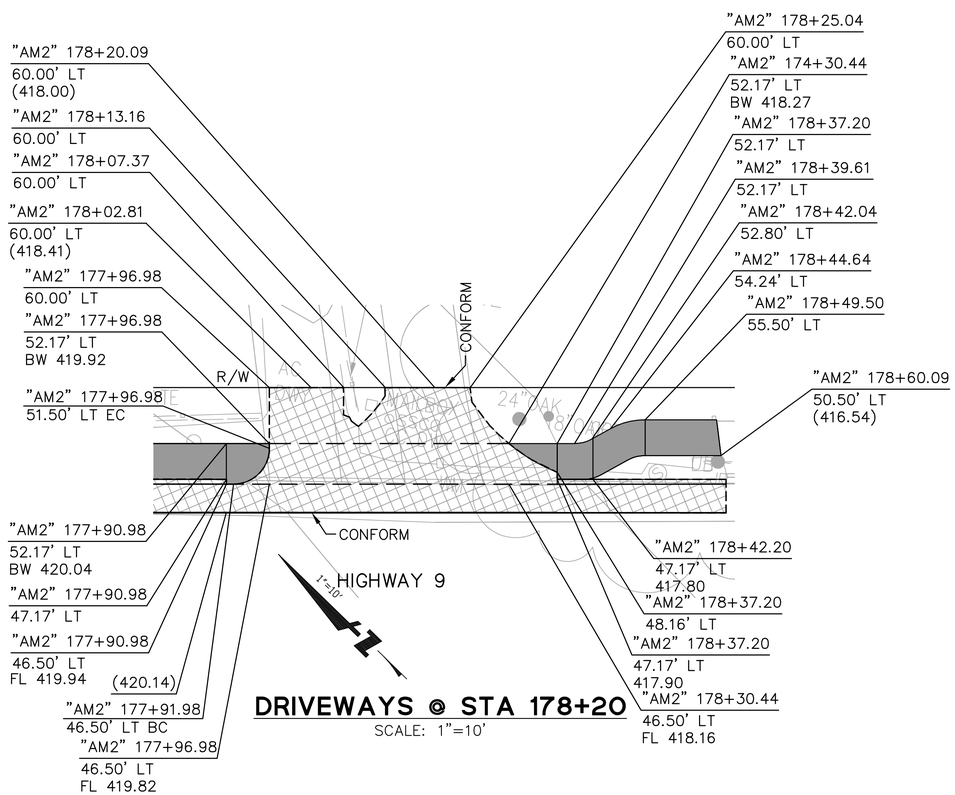

DRIVEWAYS @ STA 178+20

SCALE: 1"=10'

DATE: TIME: DRAWING NAME:
SERVER: SERVICE: PLOTTING VIEW: PROJ. MGR:
PATH: DESIGNER:

XREFS: P:\Eng10\107004 - Hwy 9 Phase 2\DWG\Sheets\Construction Details\CD-7.dwg 01 Aug 2012 4:09:11pm Ashu

BKF
ENGINEERS / SURVEYORS / PLANNERS
1650 TECHNOLOGY DRIVE, SUITE 650
SAN JOSE, CA 95110
(408) 467-9100

Highway 9 Safety Improvement Project
Phase 2
Construction Details

NO.	BY	DATE	REVISIONS:

DATE
8/1/2012

SCALE
AS SHOWN

SHEET NO.
C-7

N:\PPW\TLG36X24.dwg

NOTES:

1. STATION AND OFFSET INFORMATION FOR STORM DRAIN INLET REFERS TO THE CENTER OF THE STRUCTURE AT THE FLOWLINE OF AC DIKE.
2. DRAINAGE INLET GRATES SHALL BE BICYCLE PROOF, TYPE 24-12X, PER CALTRANS STANDARD PLAN D77B.

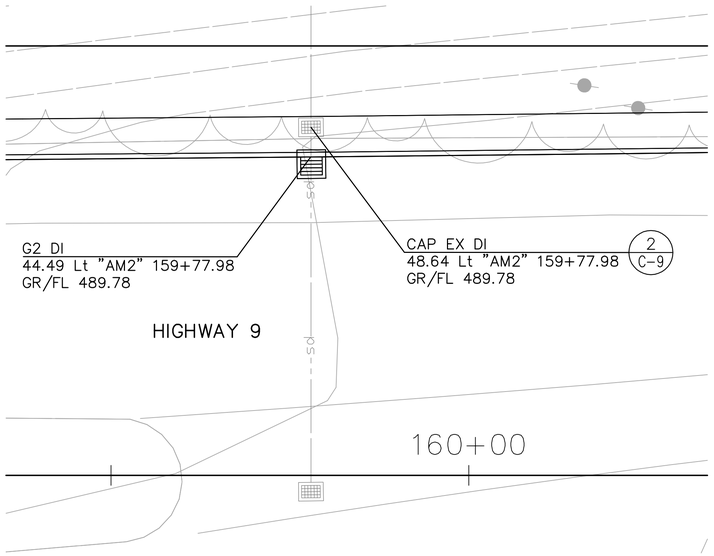

DI AT STA 159+77.98

SCALE: 1"=10'

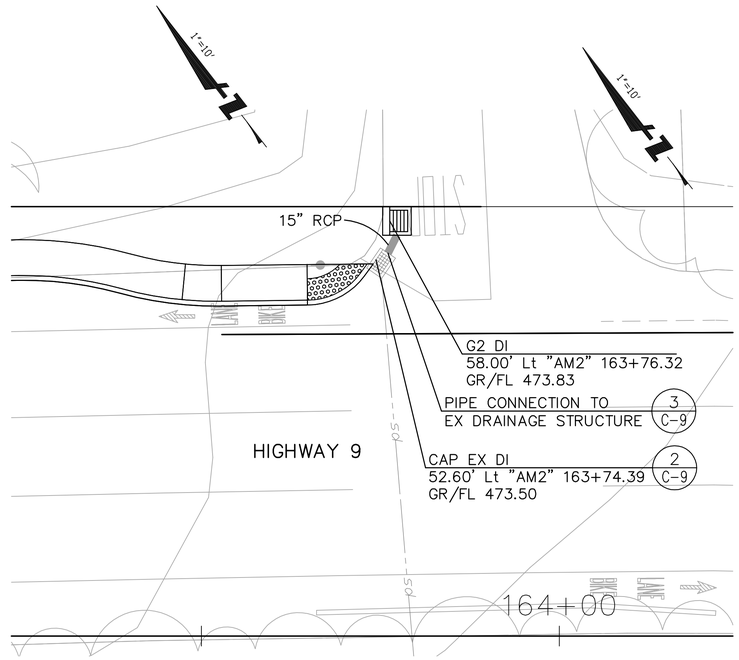

DI AT STA 163+76.32

SCALE: 1"=10'

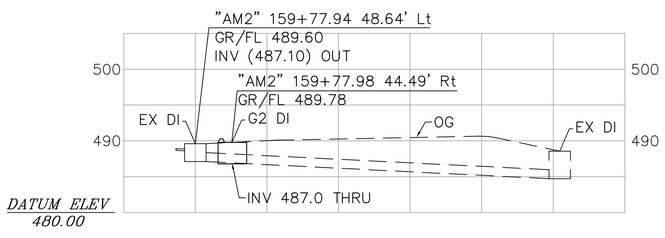

1"=10' H; 1"=10' V

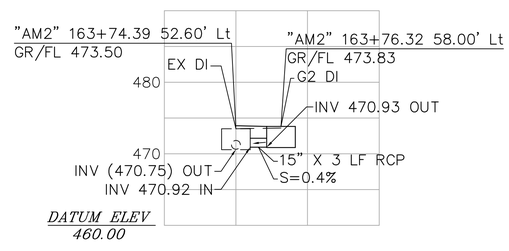

1"=10' H; 1"=10' V

BKF
ENGINEERS | SURVEYORS | PLANNERS
1650 TECHNOLOGY DRIVE, SUITE 650
SAN JOSE, CA 95110
(408) 467-9100

Highway 9 Safety Improvement Project Phase 2
Construction Details

NO.	BY	DATE	REVISIONS:

DATE 8/5/2011

SCALE AS SHOWN

SHEET NO. C-8

DATE: TIME: DRAWING NAME: PROJ. MGR.
SERVER: SERVICE: PLOTTING VIEW:
PATH: PATH: DESIGNER:

XREFS: P:\Eng10\107004 - Hwy 9 Phase 2\DWG\Sheets\Construction Details\CD-8.dwg 01 Aug 2012 4:10:44pm Ashu

N:\PPW\TLG36X24.dwg

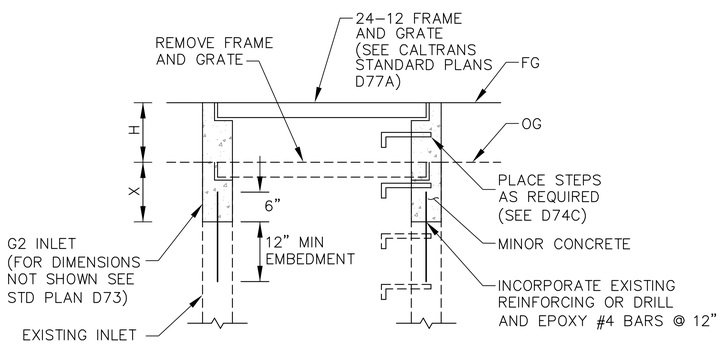

ADJUST DRAINAGE INLET (1/–)

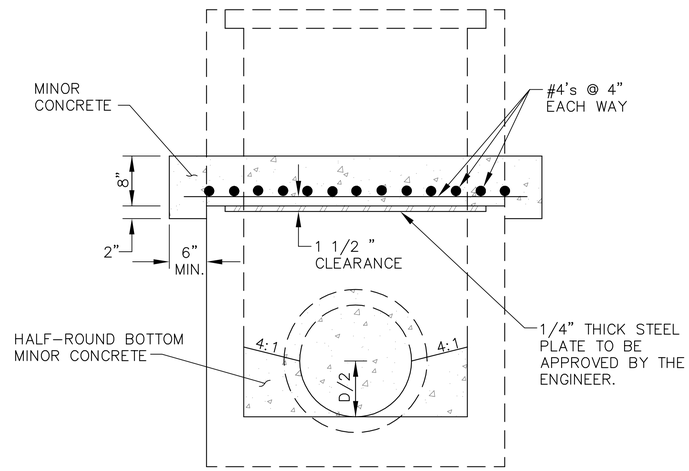

CAP DRAINAGE INLET (2/–)

NOTES:

1. TOP OF CAP TO BE 1'–0" MIN BELOW THE GRADING PLANE.
2. REMOVE EXISTING DRAINAGE STRUCTURE WALLS WHERE REQUIRED.

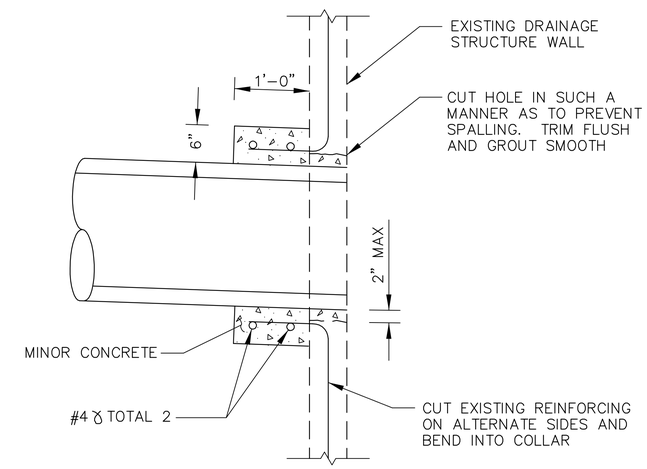

PIPE CONNECTION TO EXISTING DRAINAGE STRUCTURE (3/–)

NOTES:

1. IF WALL OF EXISTING DRAINAGE STRUCTURE HAS NO REINFORCING, DRILL AND BOND #4 DOWELS, 1 FT. ON CENTER, 6" INTO WALL AND BEND INTO COLLAR.
2. SQUARE OR CIRCULAR COLLAR OPTIONAL.

BKF
ENGINEERS | SURVEYORS | PLANNERS
1650 TECHNOLOGY DRIVE, SUITE 650
SAN JOSE, CA 95110
(408) 467-9100

Highway 9 Safety Improvement Project
Phase 2
Construction Details

NO.	BY	DATE	REVISIONS:

DATE 8/1/2012

SCALE NO SCALE

SHEET NO. C-9

DATE: TIME: DRAWING NAME:
SERVER: SERVICE: PLOTTING VIEW: PROJ. MGR:
PATH: DESIGNER:
XREFS: P:\Eng10\107004 - Hwy 9 Phase 2\DWG\Sheets\Construction Details\CD-9.dwg 01 Aug 2012 4:09:50pm Ashu
N:\PPW\TLG36X24.dwg

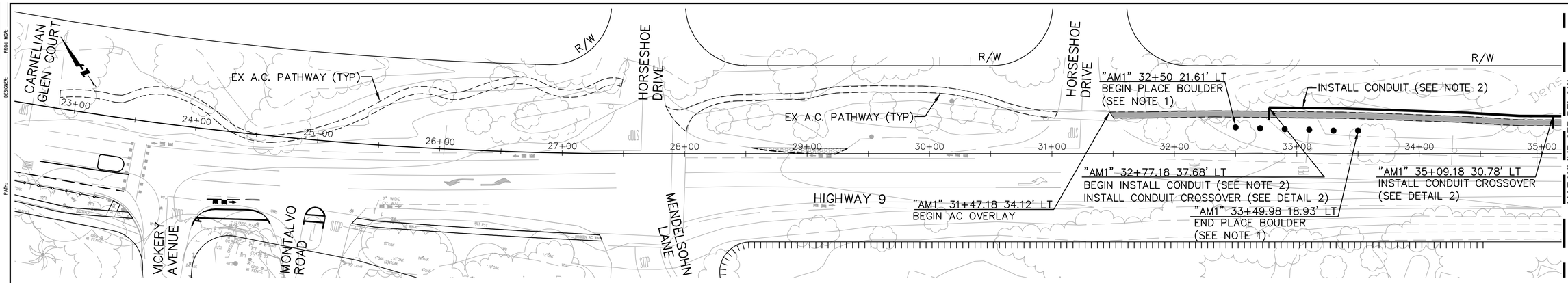

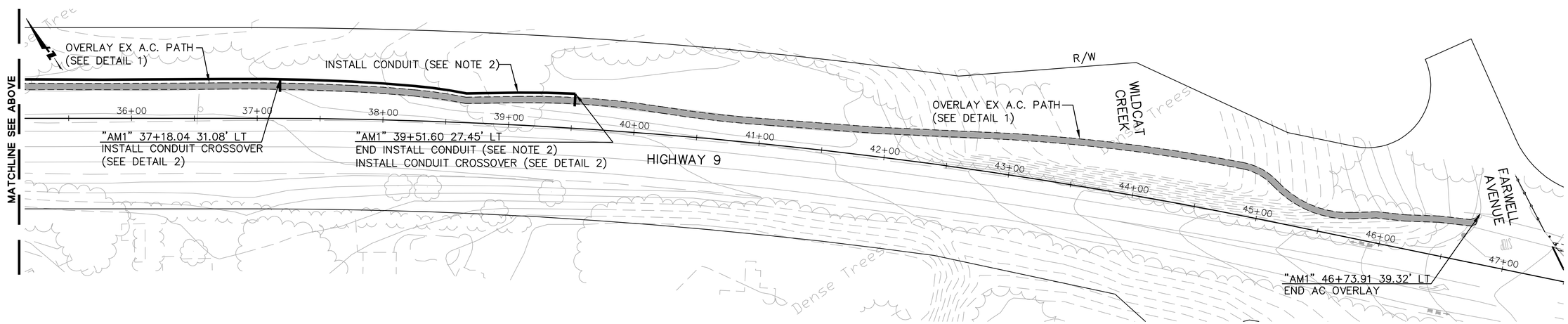

LEGEND:

- OVERLAY EX A.C. PATHWAY
- BOULDER
- CONDUIT

NOTES:

1. PROVIDE BOULDERS SPACED AT 20' O.C. (TYP) AND 20' MINIMUM FROM EDGE OF TRAVEL LANE.
2. INSTALL ONE 1-1/2" SCH 40 CONDUIT 680' LONG WITH FOUR 1-1/2" SCH 40 CROSSOVER CONDUITS. INSTALL ONE 1-1/4" GRAY ELECTRICAL CONDUIT 680' LONG. CONDUITS SHALL BE PLACED ADJACENT TO EACH OTHER AND SHALL BE 12" TO 18" DEEP BELOW PATHWAY FINISH GRADE AND HAVE AN OFFSET OF 3' FROM EDGE OF PATHWAY OR AS DIRECTED BY THE ENGINEER.

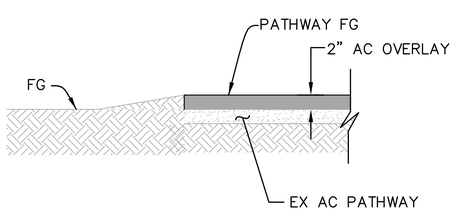

A.C. OVERLAY DETAIL (1/-)
NOT TO SCALE

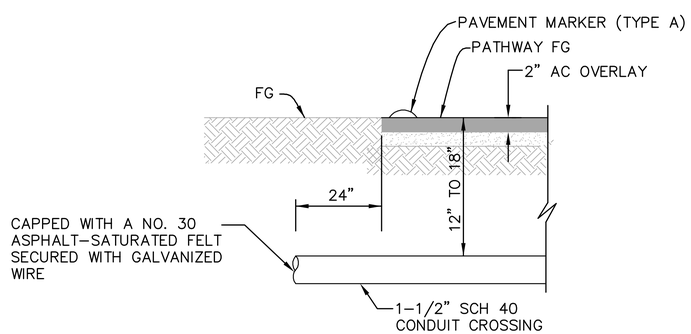

CONDUIT CROSSOVER DETAIL (2/-)
NOT TO SCALE

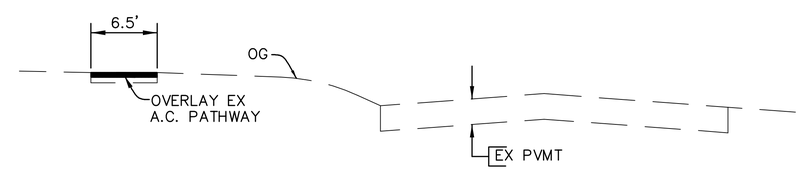

"AM1" 39+51.60 TO 46+73.91

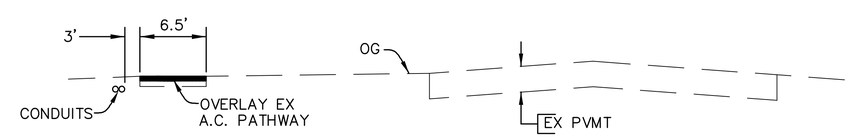

"AM1" 31+47.18 TO 39+51.60

BKF
ENGINEERS / SURVEYORS / PLANNERS
1650 TECHNOLOGY DRIVE, SUITE 650
SAN JOSE, CA 95110
(408) 467-9100

Highway 9 Safety Improvement Project
Phase 2
Construction Details

NO.	BY	DATE	REVISIONS:

DATE 8/1/2012
SCALE 1" = 40'
SHEET NO. C-10

N:\PPW\TLG36X24.dwg

XREFS: P:\Eng10\107004 - Hwy 9 Phase 2\DWG\Sheets\Construction Details\CD-10.dwg 13 Aug 2012 4:57:22pm Ashu

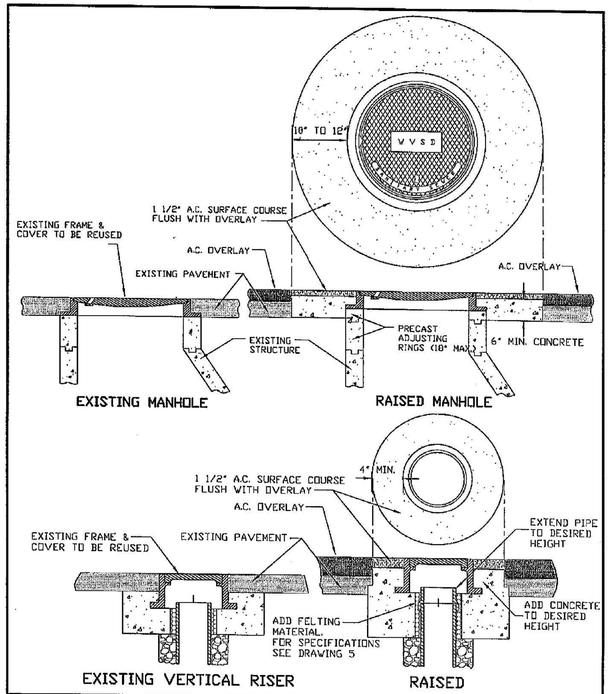

WEST VALLEY SANITATION DISTRICT OF SANTA CLARA COUNTY

MANHOLE / VERTICAL RISER ADJUSTMENT DETAIL

SCALE	DRAWN BY:	CHECKED BY:	APPROVED BY:	DRAWING
NONE	J. PICADO	P. SEVCIK	DATE SEPT. 13, 2007 DISTRICT MANAGER AND ENGINEER	12

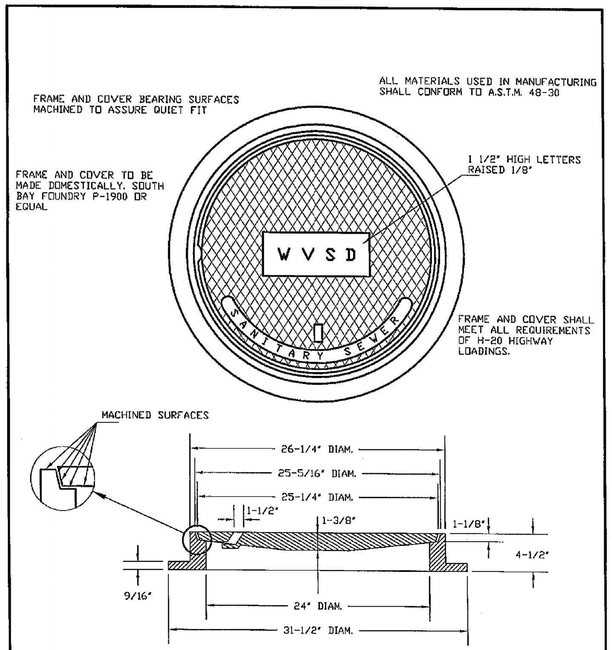

WEST VALLEY SANITATION DISTRICT OF SANTA CLARA COUNTY

STANDARD MANHOLE FRAME AND COVER

SCALE	DRAWN BY:	CHECKED BY:	APPROVED BY:	DRAWING
NONE	J. PICADO	P. SEVCIK	DATE SEPT. 13, 2007 DISTRICT MANAGER AND ENGINEER	4

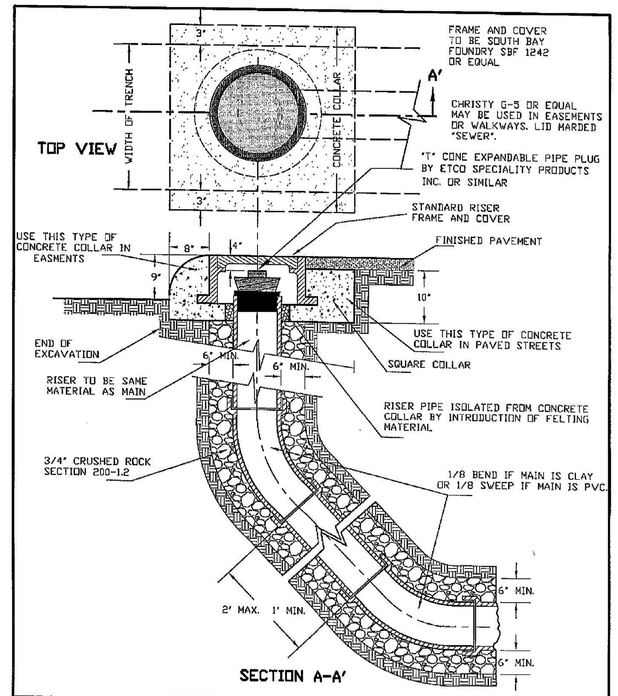

WEST VALLEY SANITATION DISTRICT OF SANTA CLARA COUNTY

STANDARD VERTICAL RISER

SCALE	DRAWN BY:	CHECKED BY:	APPROVED BY:	DRAWING
NONE	J. PICADO	P. SEVCIK	DATE SEPT. 13, 2007 DISTRICT MANAGER AND ENGINEER	5

BKF
ENGINEERS / SURVEYORS / PLANNERS
1650 TECHNOLOGY DRIVE, SUITE 650
SAN JOSE, CA 95110
(408) 467-9100

Highway 9 Safety Improvement Project Phase 2

Construction Details

NO.	BY	DATE	REVISIONS:

DATE 8/1/2012

SCALE NO SCALE

SHEET NO. C-11

DATE: TIME: DRAWING NAME:
SERVER: SERVICE: PLOTTING VIEW: PROJ. MGR:
PATH: DESIGNER:
XREFS: P:\Eng10\107004 - Hwy 9 Phase 2\DWG\Sheets\Construction Details\CD-11.dwg 13 Aug 2012 8:52:41am Ashu
N:\PPW\TLG36X24.dwg

NOTES:

1. FOR PROPOSED SLOPES AND CONTOUR GRADING, SEE TYPICAL CROSS SECTIONS, LAYOUTS, AND GRADING SHEETS.

2. FOR ADDITIONAL EROSION CONTROL INFORMATION, SEE EROSION CONTROL SPECIFICATIONS.

LEGEND:

EROSION CONTROL (HYDROSEED)

EXISTING DRAINAGE INLET

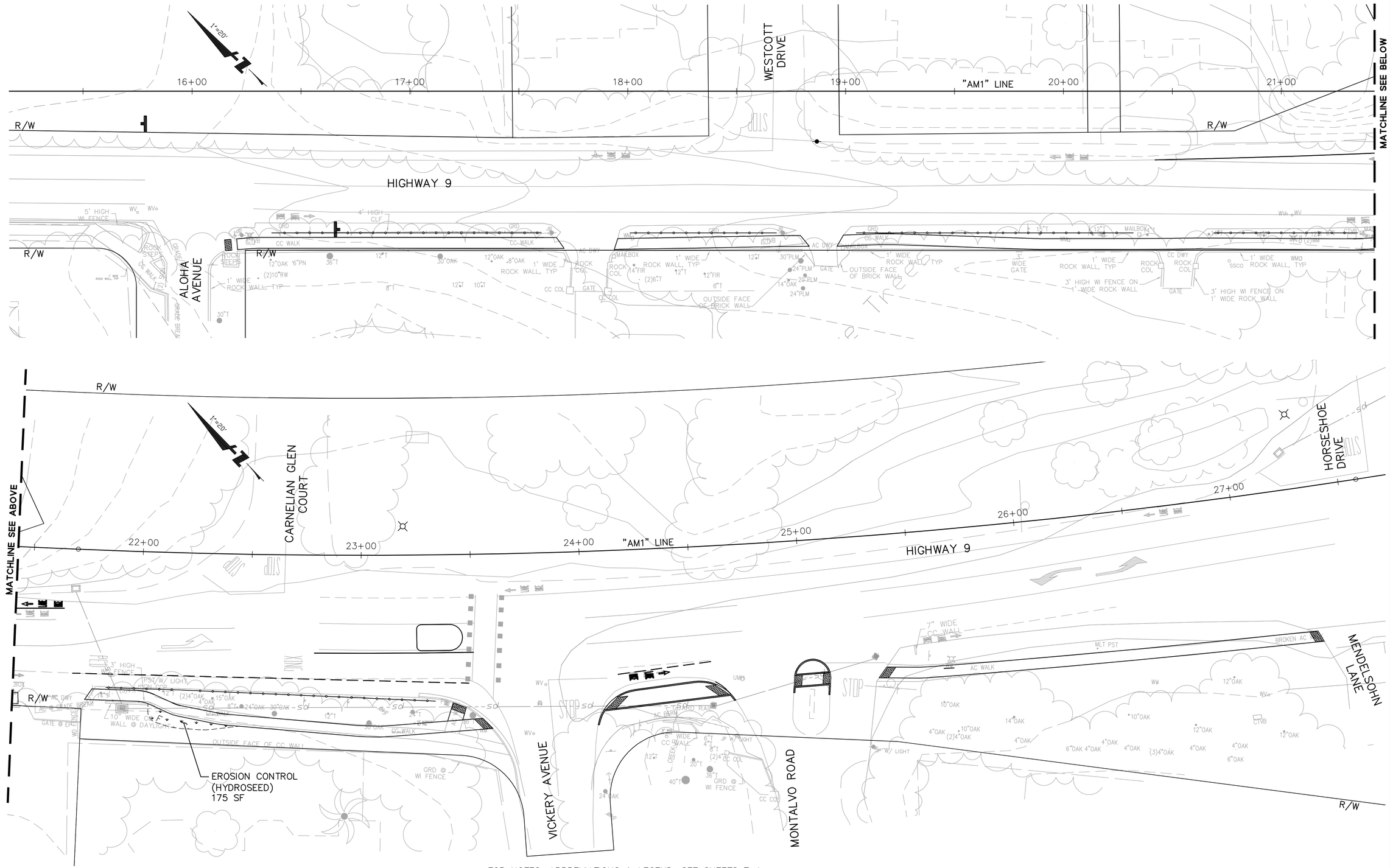

FOR NOTES, ABBREVIATIONS & LEGEND, SEE SHEETS T-1.

BKF ENGINEERS / SURVEYORS / PLANNERS
1650 TECHNOLOGY DRIVE, SUITE 650
SAN JOSE, CA 95110
(408) 467-9100

Highway 9 Safety Improvement Project Phase 2

Erosion Control

NO.	BY	DATE	REVISIONS:

DATE 8/1/2012

SCALE 1" = 20'

SHEET NO. EC-1

N:\PPW\TLG36X24.dwg

XREFS: P:\Eng10\107004 - Hwy 9 Phase 2\DWG\Sheets\Erosion Control\EC-1.dwg 13 Aug 2012 5:01:30pm Ashu

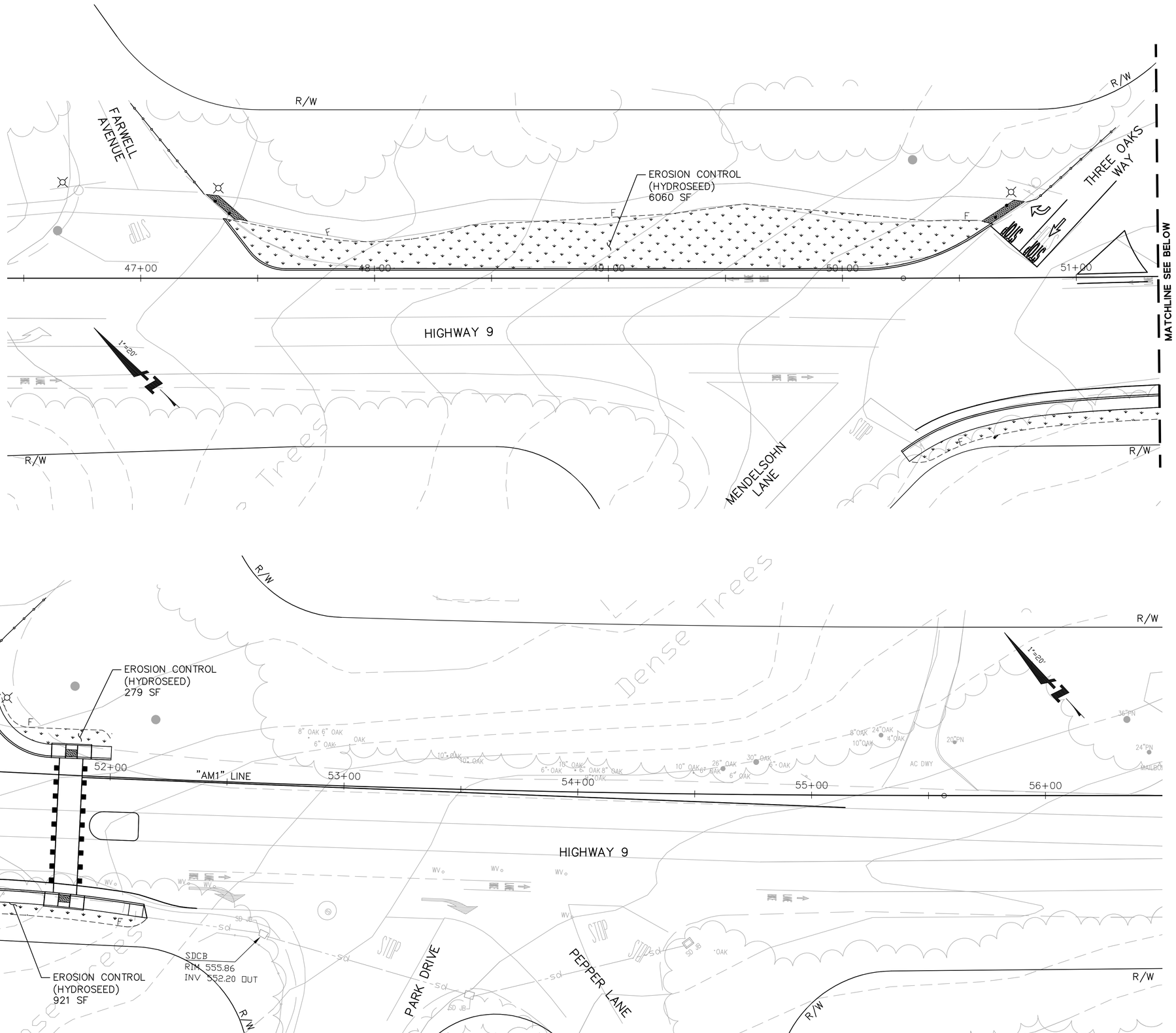

FOR NOTES, ABBREVIATIONS & LEGEND, SEE SHEETS T-1 & EC-1.

DATE: TIME: DRAWING NAME:
SERVER: SERVICE: PLOTTING VIEW: PROJ. MGR:
PATH: DESIGNER:

XREFS: P:\Eng10\107004 - Hwy 9 Phase 2\DWG\Sheets\Erosion Control\EC-2.dwg 01 Aug 2012 3:49:02pm Ashu

BKF
ENGINEERS | SURVEYORS | PLANNERS
1650 TECHNOLOGY DRIVE, SUITE 650
SAN JOSE, CA 95110
(408) 467-9100

Highway 9 Safety Improvement Project Phase 2

Erosion Control

NO.	BY	DATE	REVISIONS:

DATE 8/1/2012

SCALE 1" = 20'

SHEET NO. EC-2

N:\PPW\TLG36X24.dwg

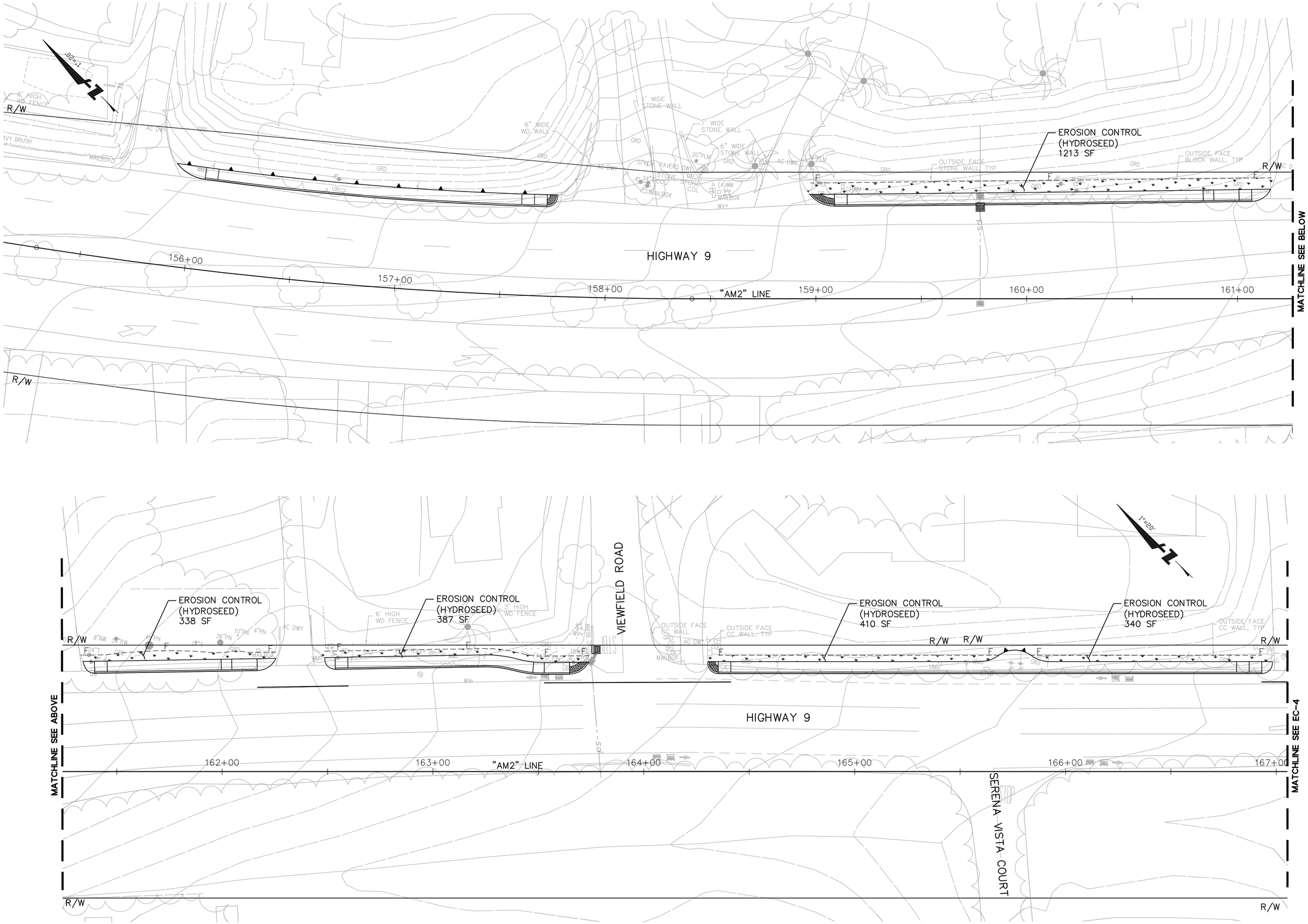

FOR NOTES, ABBREVIATIONS & LEGEND, SEE SHEETS T-1 & EC-1.

BKF
ENGINEERS / SURVEYORS / PLANNERS
1650 TECHNOLOGY DRIVE, SUITE 650
SAN JOSE, CA 95110
(408) 467-9100

Highway 9 Safety Improvement Project Phase 2

Erosion Control

NO.	BY	DATE	REVISIONS:

DATE 8/1/2012

SCALE 1" = 20'

SHEET NO. EC-3

N:\PPW\TLG36X24.dwg

DATE: TIME: DRAWING NAME: PROJ. MGR:
SERVER: SERVICE: PLOTTING VIEW:
PATH: DESIGNER:

XREFS: P:\Eng10\107004 - Hwy 9 Phase 2\DWG\Sheets\Erosion Control\EC-3.dwg 10 Aug 2012 8:54:58am HERN

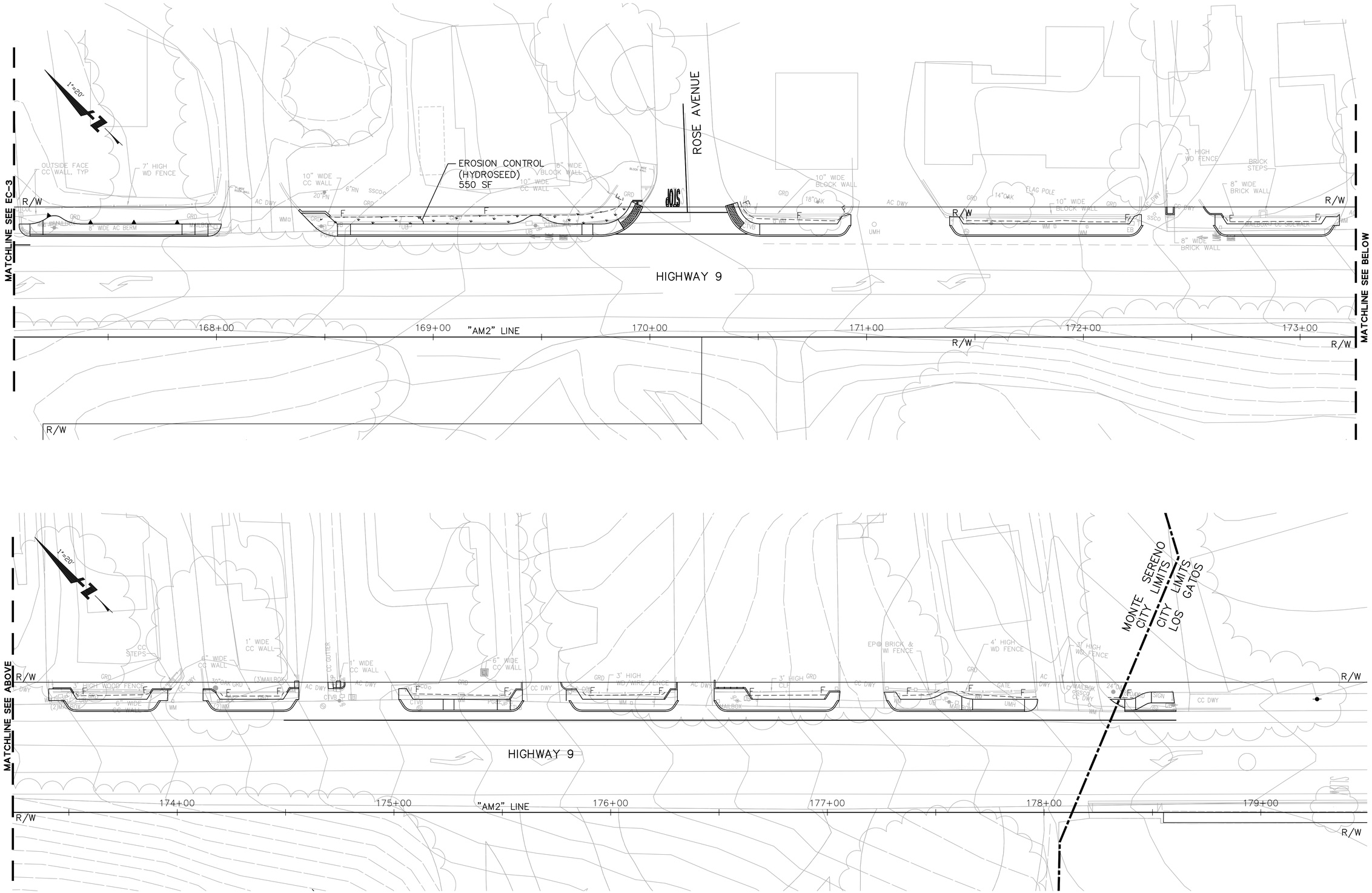

FOR NOTES, ABBREVIATIONS & LEGEND, SEE SHEETS T-1 & EC-1.

BKF
ENGINEERS / SURVEYORS / PLANNERS
1650 TECHNOLOGY DRIVE, SUITE 650
SAN JOSE, CA 95110
(408) 467-9100

Highway 9 Safety Improvement Project Phase 2

Erosion Control

NO.	BY	DATE	REVISIONS:

DATE 8/1/2012

SCALE 1" = 20'

SHEET NO. EC-4

N:\PPW\TLG36X24.dwg

XREFS: P:\Eng10\107004 - Hwy 9 Phase 2\DWG\Sheets\Erosion Control\EC-4.dwg 01 Aug 2012 3:52:44pm Ashu

DATE: TIME: DRAWING NAME:
SERVER: SERVICE: PLOTTING VIEW: PROJ. MGR:
PATH: DESIGNER:

NOTES:

1. ALL TRAFFIC CONTROL MEASURES SHALL COMPLY WITH THESE PLANS AND CALIFORNIA MUTCD 2010 EDITION.
2. CONTRACTOR SHALL MAINTAIN DRIVEWAY OPEN AT ALL TIMES.
3. CONTRACTOR SHALL PLACE PORTABLE DELINEATORS OR TRAFFIC CONES ALONG CONSTRUCTION AREAS @ 15' O.C.
4. CONTRACTOR SHALL COORDINATE WORK SUCH THAT ONLY TWO BLOCKS OR A MAXIMUM OF 500' OF HWY 9 WILL REQUIRE TRAFFIC CONTROL AT ANY GIVEN TIME. WORK SHALL NOT BEGIN AT A THIRD BLOCK OR NEW STREET SECTION BEFORE COMPLETION AT THE FIRST AND SECOND BLOCKS.

LEGEND:

- SIGN (DESIGNATION PER LATEST MUTCD EDITION – CALIFORNIA CODE)
- WORK AREA
- PORTABLE DELINEATORS OR TRAFFIC CONES @ 15' O.C.
- DIRECTION OF TRAVEL
- TYPE III BARRICADE

DETAIL A
NTS

DETAIL B
NTS

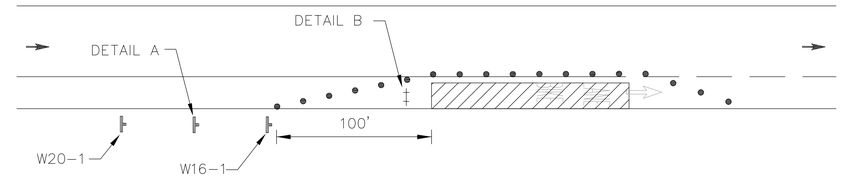

TYPICAL BIKE LANE CLOSURE DETAIL

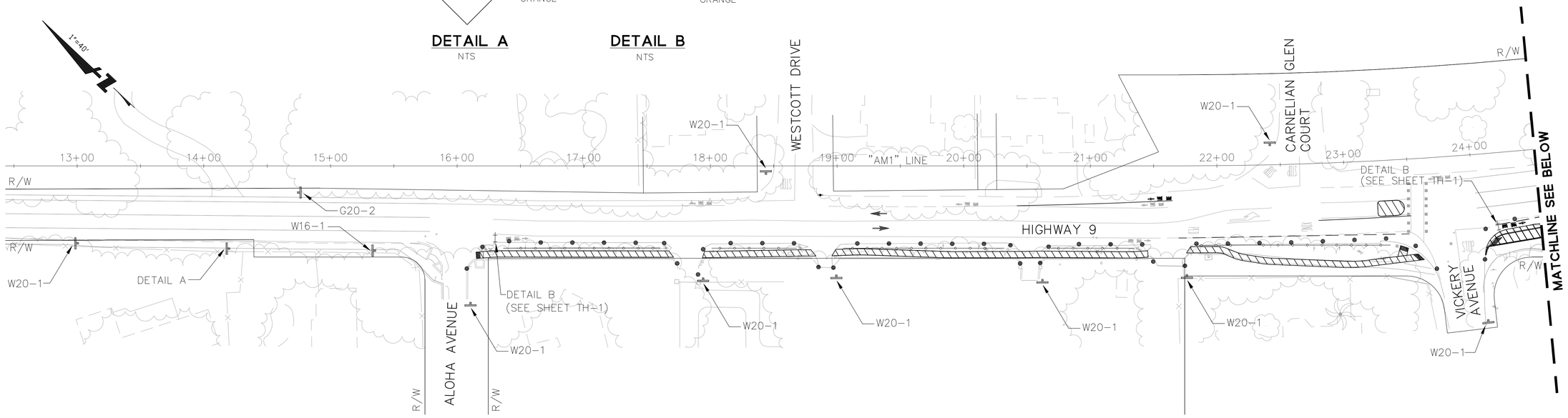

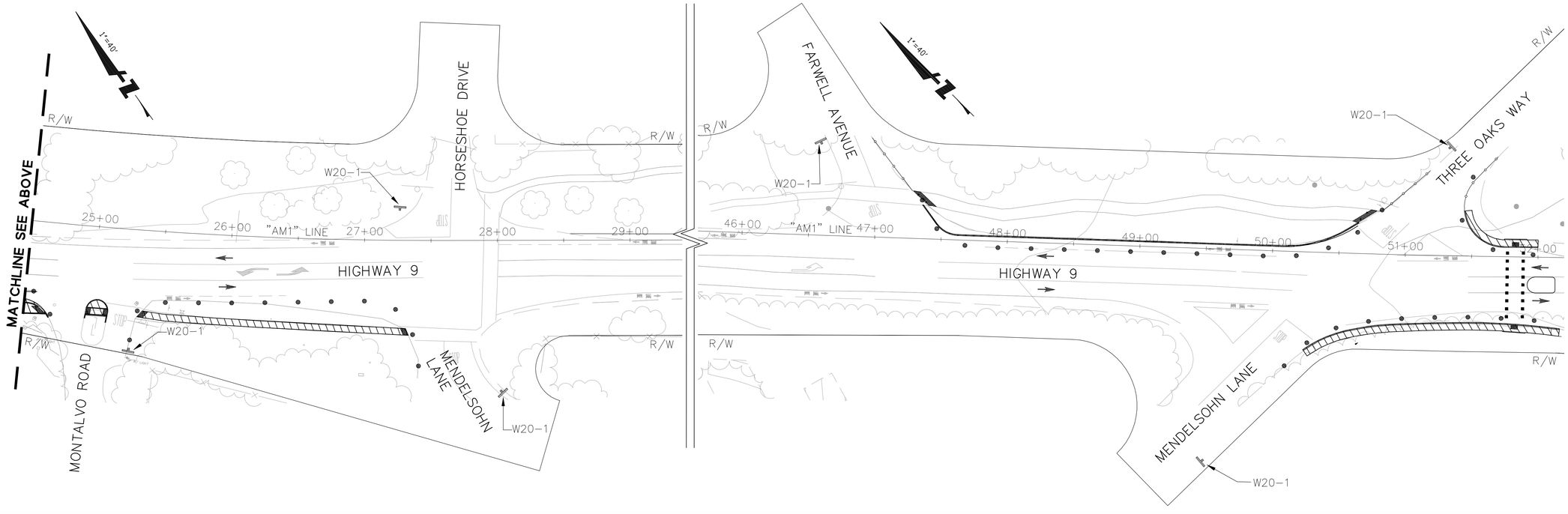

BKF
ENGINEERS / SURVEYORS / PLANNERS
1650 TECHNOLOGY DRIVE, SUITE 650
SAN JOSE, CA. 95110
(408) 467-9100

Highway 9 Safety Improvement Project
Phase 2
Traffic Handling Plan

NO.	BY	DATE	REVISIONS:

DATE
8/1/2012

SCALE
1" = 40'

SHEET NO.
TH-1

N:\PPW\TLG36X24.dwg

XREFS: K:\ENG10\107004SJ\DWG\Sheets\2012-07-31 Red lines\Traffic Handling\TH-1.dwg 31 Jul 2012 3:14:51pm clem

XREFS: K:\ENG10\107004SJ\DWG\Sheets\2012-07-31 FINAL SUBMITTAL\Traffic Handling\TH-2.dwg 10 Aug 2012 9:14:59am wonc

DATE: TIME: DRAWING NAME:
SERVER: SERVICE: PLOTTING VIEW:
PATH: DESIGNER: PROJ. MGR:

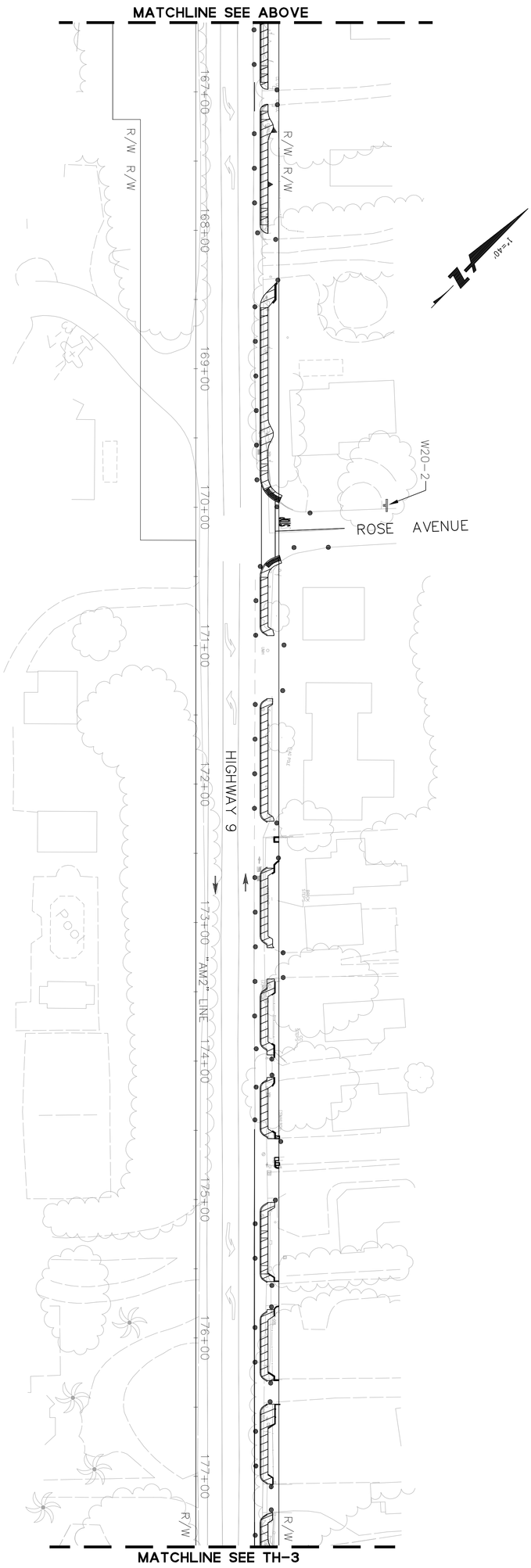

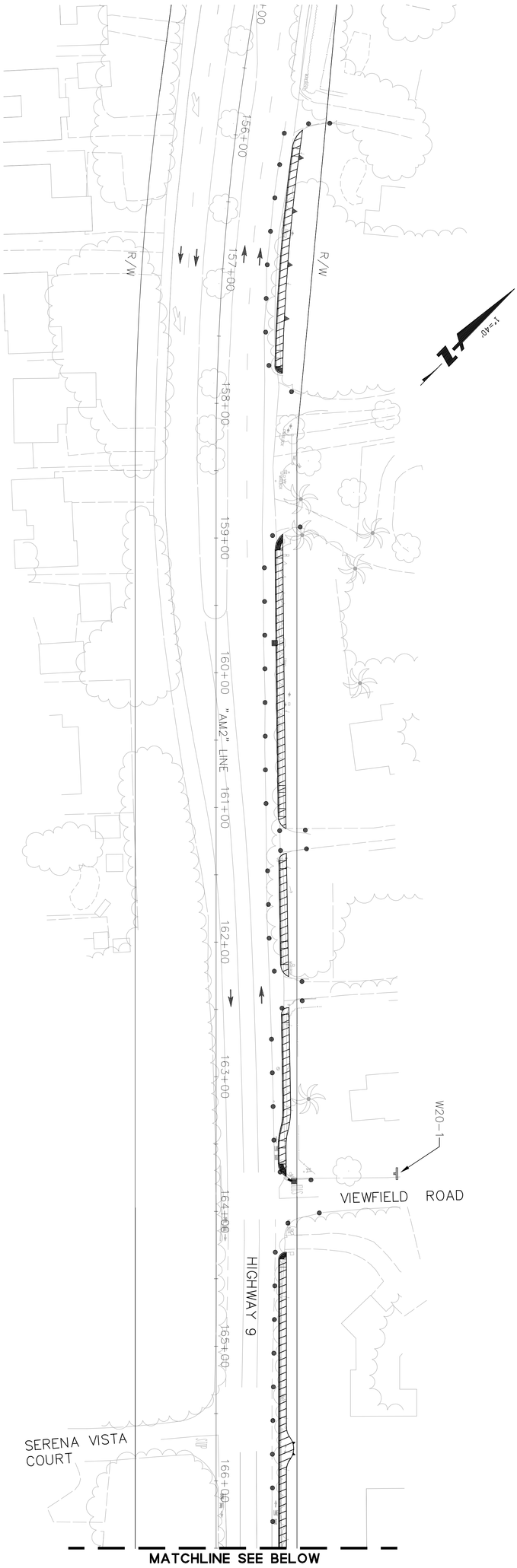

NO.	BY	DATE	REVISIONS:

DATE 8/1/2012
SCALE 1" = 40'
SHEET NO. TH-2

Highway 9 Safety Improvement Project
Phase 2

Traffic Handling Plan

BKF
ENGINEERS / SURVEYORS / PLANNERS
1650 TECHNOLOGY DRIVE, SUITE 650
SAN JOSE, CA. 95110
(408) 467-9100

N:\PW\TL036X24.dwg

DATE: TIME: DRAWING NAME:
SERVER: SERVICE: PLOTTING VIEW:
PATH: DESIGNER: PROJ. MGR:

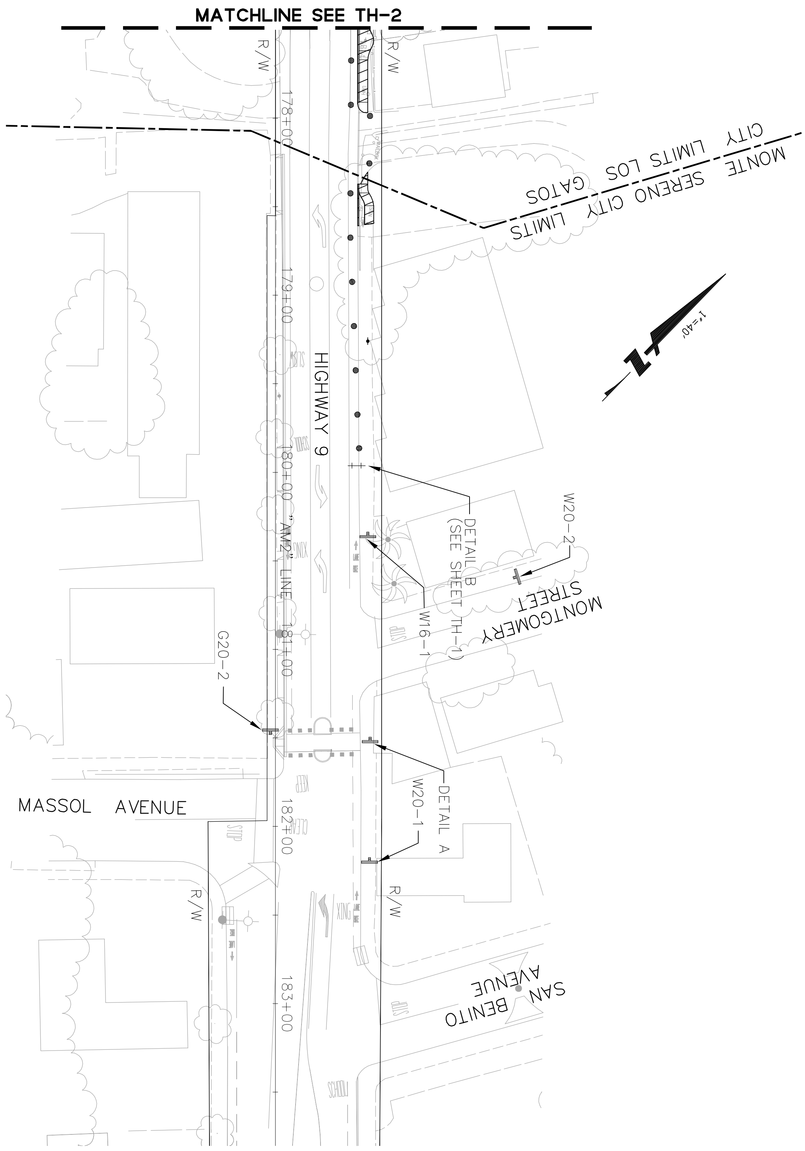

Highway 9 Safety Improvement Project
Phase 2

Traffic Handling Plan

NO.	BY	DATE	REVISIONS:

DATE 8/1/2012
SCALE 1" = 40'
SHEET NO. TH-3

N:\PPW\TL636X24.dwg

BKF
ENGINEERS / SURVEYORS / PLANNERS
1650 TECHNOLOGY DRIVE, SUITE 650
SAN JOSE, CA. 95110
(408) 467-9100

NOTES:

1. ALL ELECTRICAL WORK AND LIGHTING EQUIPMENT SHALL CONFORM TO CALTRANS STANDARD SPECIFICATIONS AND STANDARD PLANS DATED MAY 2006. SEE TECHNICAL PROVISIONS FOR ADDITIONAL INFORMATION.
2. ALL ROADWAY SIGNING SHALL CONFORM TO CALTRANS STANDARD PLANS DATED MAY 2006, STANDARD SPECIFICATIONS, AND THE CALIFORNIA 2010 MUTCD.
3. EXACT LOCATION OF FLASHING WARNING SIGNS AND BEACON SHALL BE DETERMINED BY THE ENGINEER.
4. CONTRACTOR SHALL REMOVE EXISTING PAVEMENT DELINEATION WHICH CONFLICT WITH THIS PLAN.
5. ALL PAVEMENT STRIPING AND MARKING SHALL BE THERMOPLASTIC.
6. FOR PEDESTRIAN LIGHTING POLE FOUNDATION DETAIL SEE SHEET C-3.

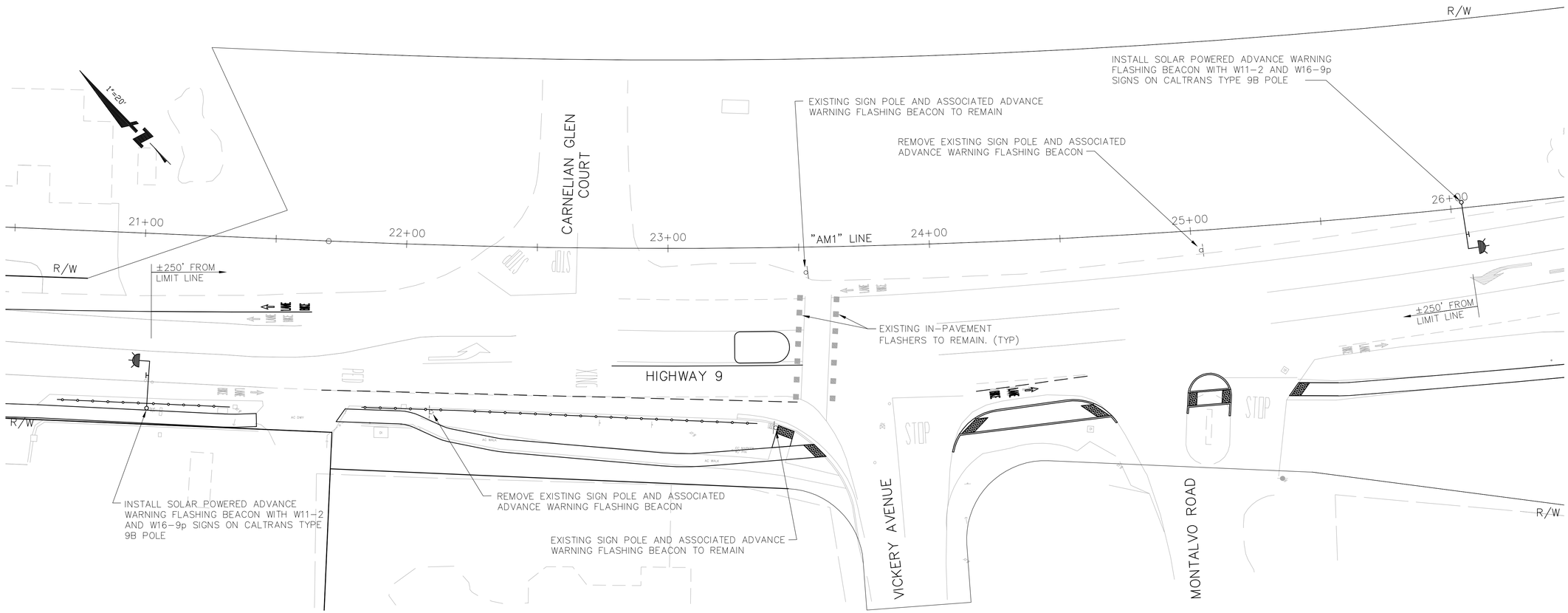

BKF ENGINEERS / SURVEYORS / PLANNERS
1650 TECHNOLOGY DRIVE, SUITE 650
SAN JOSE, CA 95110
(408) 467-9100

Highway 9 Safety Improvement Project Phase 2
In-Pavement Lighting

NO.	BY	DATE	REVISIONS:

DATE 8/1/2012

SCALE 1" = 20'

SHEET NO. E-1

N:\PPW\TLG36X24.dwg

DATE: TIME: DRAWING NAME:
SERVER: SERVICE: PLOTTING VIEW:
PATH: DESIGNER: PROJ MGR:

XREFS: K:\ENG10\107004SJ\DWG\Sheets\2012-07-31 FINAL SUBMITTAL\In Pavement Lighting\01 E-1.dwg 01 Aug 2012 2:54:04pm onch

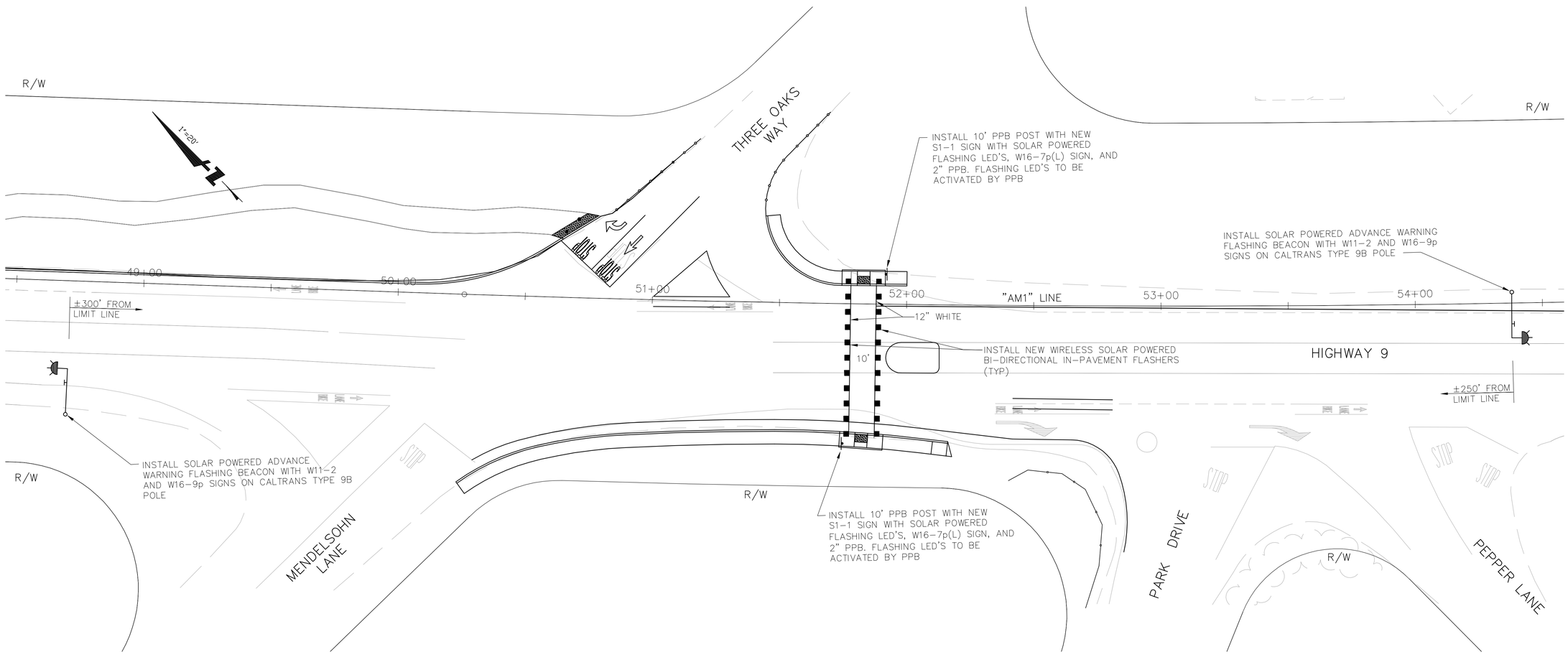

FOR NOTES SEE SHEET E-1

BKF
ENGINEERS / SURVEYORS / PLANNERS
1650 TECHNOLOGY DRIVE, SUITE 650
SAN JOSE, CA 95110
(408) 467-9100

Highway 9 Safety Improvement Project Phase 2

In-Pavement Lighting

NO.	BY	DATE	REVISIONS:

DATE 8/1/2012

SCALE 1" = 20'

SHEET NO. E-2

N:\PPW\TLG36X24.dwg

DATE: TIME: DRAWING NAME:
SERVER: SERVICE: PLOTTING VIEW:
PATH: DESIGNER: PROJ MGR:

XREFS: K:\ENG10\107004S\DWG\Sheets\2012-07-31 Red lines\In Pavement Lighting\02 E-2.dwg 31 Jul 2012 4:22:01pm clen

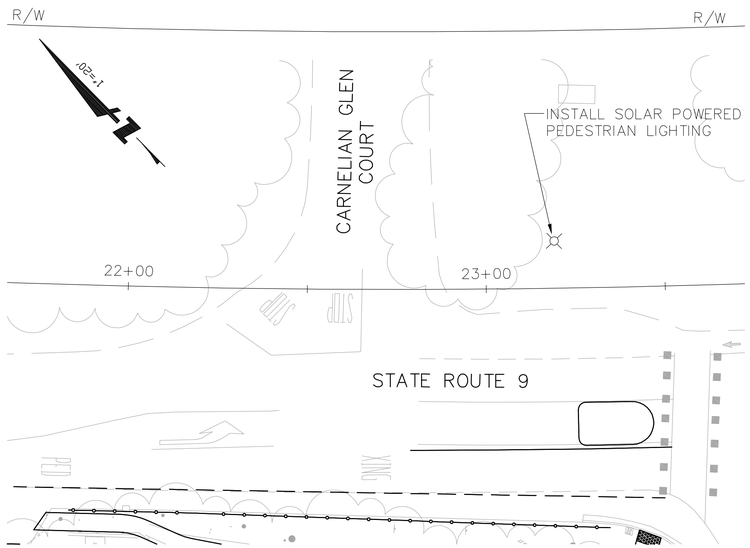

CARNELIAN GLEN COURT INTERSECTION

SCALE: 1"=20'

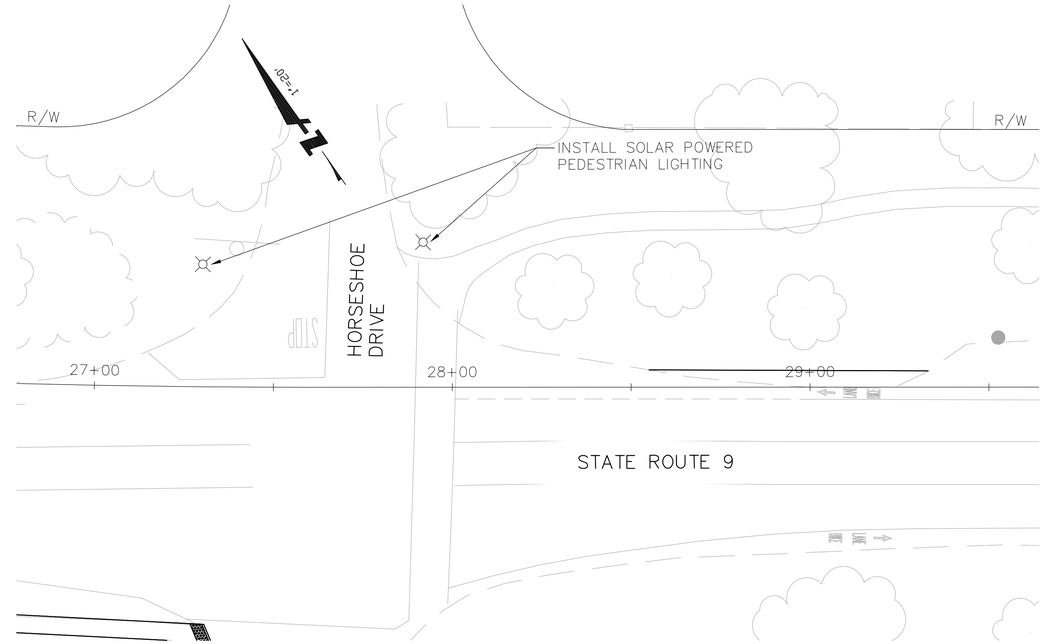

HORSESHOE DRIVE INTERSECTION

SCALE: 1"=20'

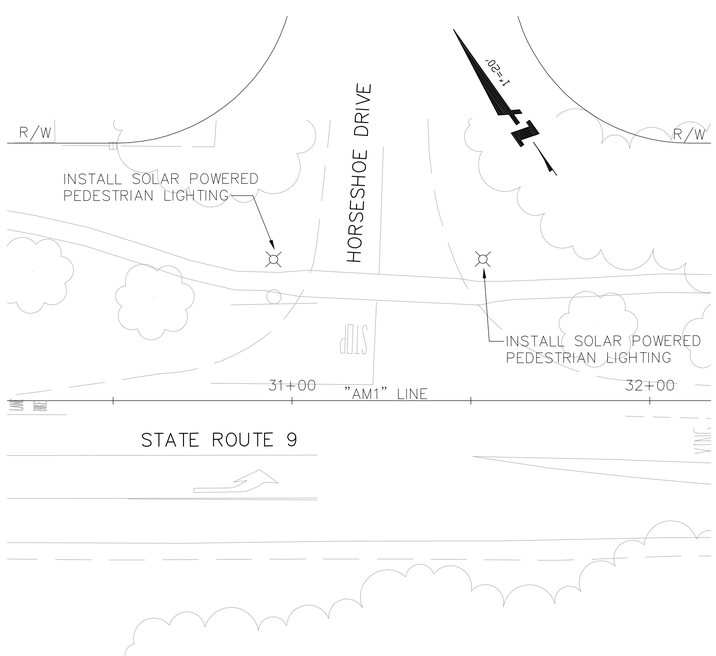

HORSESHOE DRIVE INTERSECTION

SCALE: 1"=20'

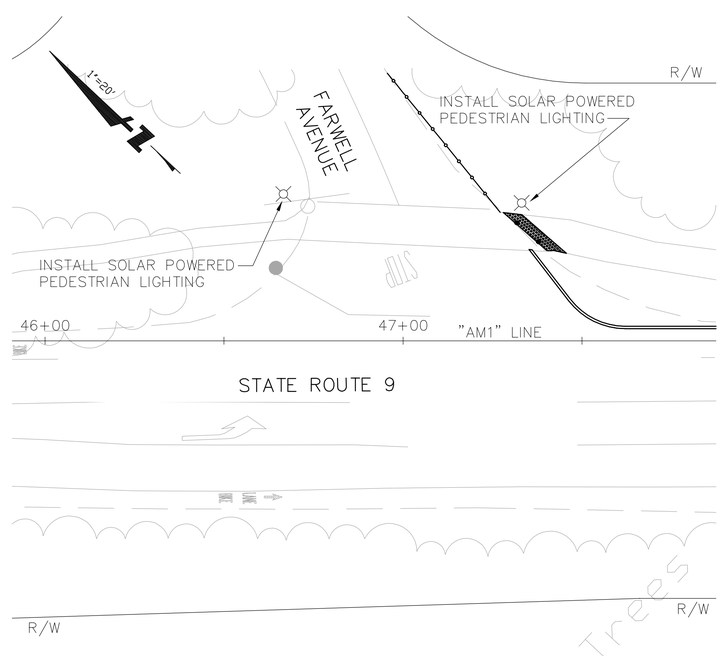

FARWELL AVENUE INTERSECTION

SCALE: 1"=20'

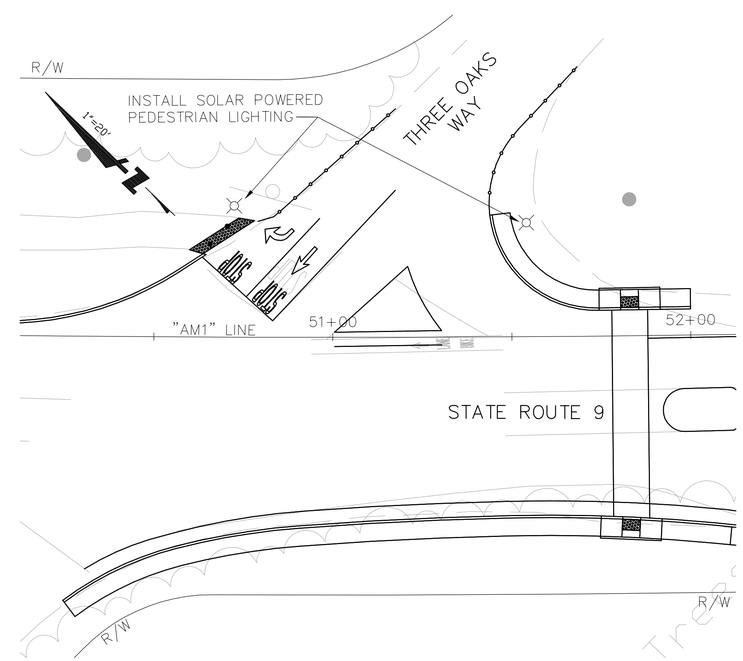

THREE OAKS WAY INTERSECTION

SCALE: 1"=20'

FOR NOTES SEE SHEET E-1

BKF
ENGINEERS / SURVEYORS / PLANNERS
1650 TECHNOLOGY DRIVE, SUITE 650
SAN JOSE, CA 95110
(408) 467-9100

Highway 9 Safety Improvement Project Phase 2

Solar Powered Pedestrian Lighting

NO.	BY	DATE	REVISIONS:

DATE 8/1/2012

SCALE 1" = 20'

SHEET NO. E-3

N:\PPW\TLG36X24.dwg

DATE: TIME: DRAWING NAME:
SERVER: SERVICE: PLOTTING VIEW: PROJ. MGR:
PATH: DESIGNER:
XREFS: K:\ENGIN\070043J\DWG\Sheets\2012-07-31 FINAL SUBMITTAL\In Pavement Lighting\03 E-3.dwg 10 Aug 2012 9:22:13am wonc