PROPOSED BRIDGE PROFILE: BRIDGE No. 37C-0113

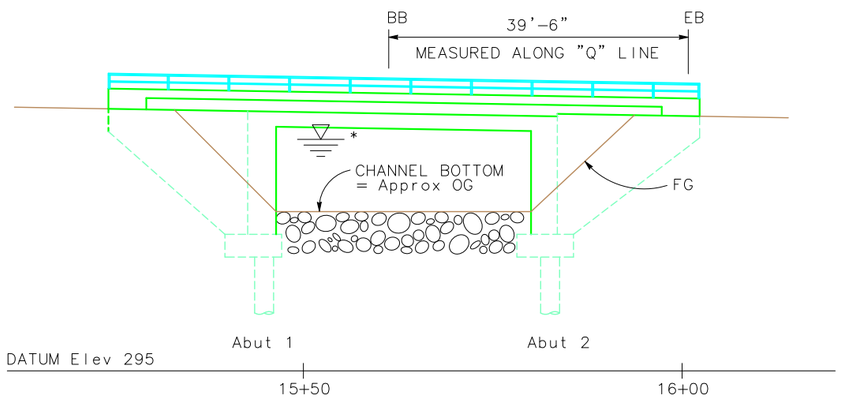

ELEVATION AT UPSTREAM EDGE OF DECK

1" = 10'

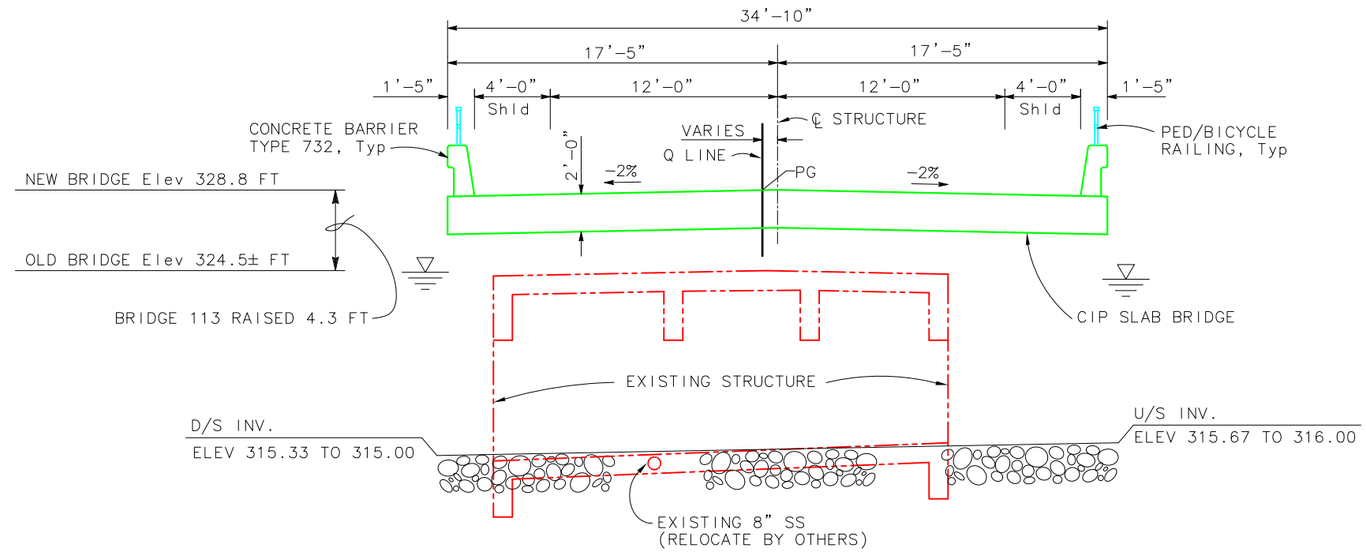

TYPICAL SECTION

1/4" = 1'-0"

"Q" LINE

R = 510.00'
Δ = 15°43'41"
L = 140.00'
T = xxx.xx'

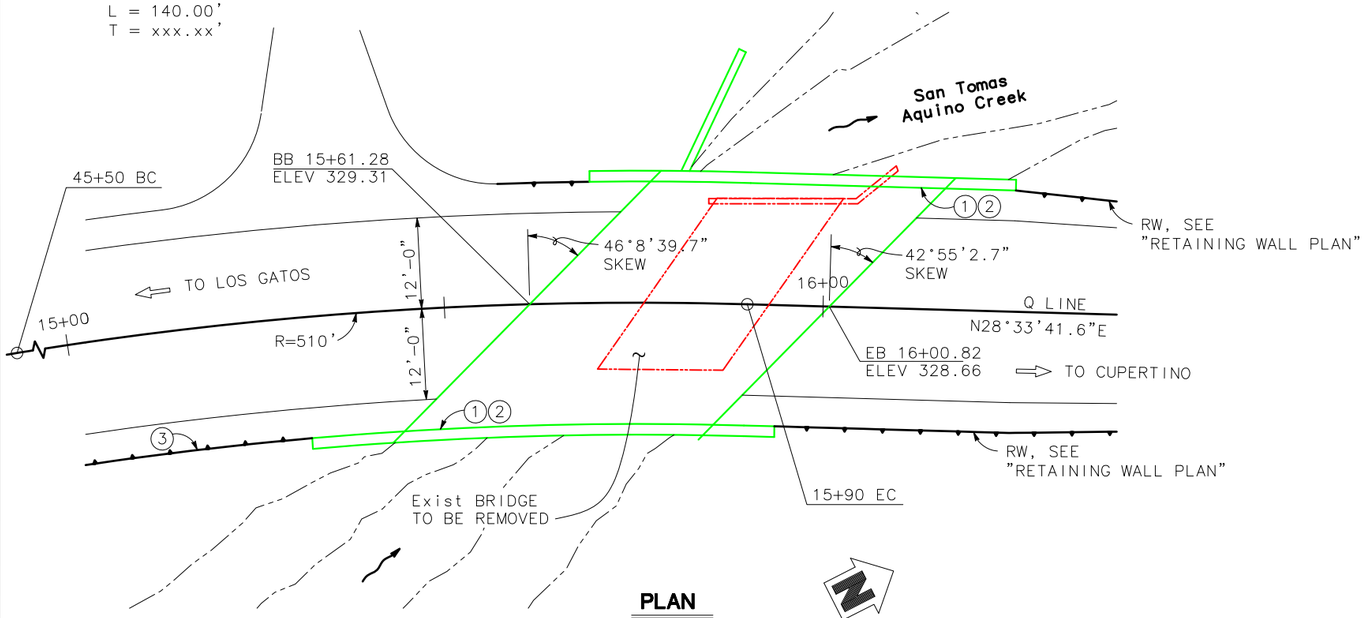

PLAN

1" = 10'

NOTES:

1. Paint "QUITO ROAD BRIDGE"
2. Paint "BR NO. 37C-0113"
3. MBGR, see "ROAD PLANS"

1. For "GENERAL NOTES", and "INDEX TO PLANS" see "DECK CONTOURS" sheet.
2. For "PILE DATA TABLE" see "FOUNDATION PLAN" sheet.

LEGEND:

——— Indicates New Construction

—-- Indicates Existing Structure

HYDROLOGIC SUMMARY

	Design Flood	Base Flood
Frequency (Years)	50	100
Discharge (Cubic Foot per Sec)	1,400	1,600
Water Surface (Elev at Bridge)	324.4	325.0

MARK THOMAS & COMPANY, INC.
Providing Engineering, Surveying, and Planning Services
1960 Zanker Road
San Jose, CA 95112
(408) 453-5373

DESIGNED BY :	P. PARK
DRAWN BY :	G. BOYKO
CHECKED BY :	
DATE :	04/04/14
SCALE :	AS SHOWN
MTCo JOB No. :	SJ-13134

No.	DESCRIPTION	DATE	BY

REVISIONS

City of Saratoga
Public Works Department
13777 FRUITVALE AVENUE SARATOGA, CA 95070
(408) 868-1200 FAX (408) 868-1281

BRIDGE REPLACEMENT PROJECT
QUITO ROAD BRIDGE AT QUITO ROAD

GENERAL PLAN

WORK ORDER No.

ADVERTISEMENT DATE: XXX, 2014

CONTRACT No.

SHEET 1 OF 1 SHEETS

S-1

RELATIVE BORDER SCALE IS IN INCHES 0 1 2 3

Standard\01-113_GP.dwg 4/7/2014 11:39 AM