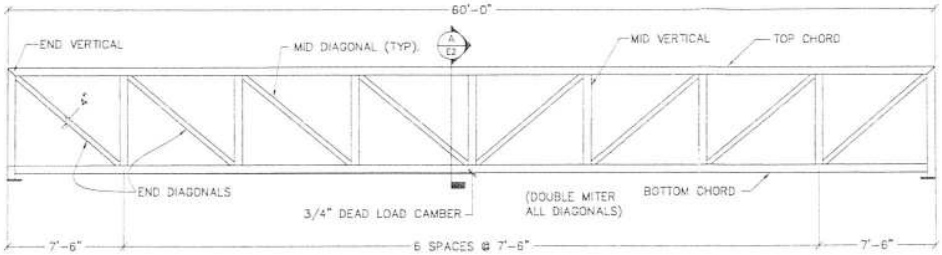

ELEVATION

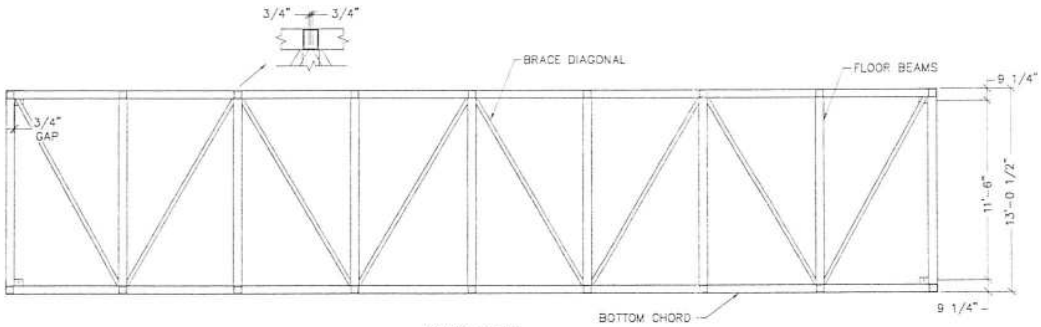

PLAN VIEW

GENERAL NOTES:

ALLOWABLE DESIGN STRESSES ARE IN ACCORDANCE WITH THE STEEL CONSTRUCTION MANUAL 13th EDITION, BY AISC.

1) MATERIALS: UNLESS NOTED OTHERWISE

a) TUBING:	ASTM A500 Gr C OR A847	Fy = 50 ksi MIN.
b) SHAPES:	ASTM A992 OR A588	Fy = 50 ksi
c) PLATES:	ASTM A588 OR A242	Fy = 50 ksi
d) ANCHOR ROD:	ASTM F1554 Gr 55	Fy = 55 ksi (GALVANIZED)

2) THE GAS METAL ARC WELDING OR FLUX CORED ARC WELDING PROCESS WILL BE USED.

3) ALL TOP AND BOTTOM CHORD SHOP SPLICES TO BE COMPLETE PENETRATION TYPE WELDS.

4) DESIGN LOADINGS:
   a) 85 psf UNIFORM LIVE LOAD
   b) 40,000 lb VEHICLE LOADING
   c) 25 psf WIND LOADING AGAINST HEIGHT OF STRUCTURE AS IF ENCLOSED.

5) FINISH:
   ALL SURFACES OF STEEL SHALL BE CLEANED IN ACCORDANCE WITH STEEL STRUCTURES PAINTING COUNCIL SURFACE PREPARATION SPECIFICATIONS NO. 6 COMMERCIAL BLAST CLEANING, SSPC-SP6 – LATEST EDITION.

   TWO COAT SYSTEM:

   PRIMER COAT OF COROTHANE 1 GALVPAC ONE PACK ZINC PRIMER, BY SHERWIN WILLIAMS, 3.0–4.0 DFT.

   FINISH COAT OF FAST CLAD DTM URETHANE, BY SHERWIN WILLIAMS, 6.0–9.0 DFT. COLOR TO BE DETERMINED BY CUSTOMER.

6) ALL WELDS SHALL BE SEALED

LIFTING WEIGHT = 16000 LBS

MEMBERS	SIZE
TOP CHORD	HSS 6x6
BOTTOM CHORD	HSS 6x6
END VERTICAL	HSS 6x6
MID VERTICAL	HSS 6x6
END DIAGONAL	HSS 5x4
MID DIAGONAL	HSS 4x4
BRACE DIAGONAL	HSS 3x3
FLOOR BEAMS	W 12
SAFETY RAIL	HSS 3x2
PICKETS	BAR 1/2" SQ.
SIDE DAM	BENT PL 1/4"
END DAM	PL 1/4"
ANCHOR ROD	1"ø (BY OTHERS)

A	ISSUED FOR APPROVAL

BIG R Manufacturing LLC
P.O. BOX 1290, GREELEY, COLORADO 80632
PHONE: (970) 356-9600 FAX: (970) 356-9621
TOLL FREE: 1-800-234-0734 www.bigrmfg.com

60'-0" x 12'-0" BRIDGE

CITY OF SARATOGA

RODEO CREEK BRIDGE SARATOGA CA

REGISTERED PROFESSIONAL ENGINEER
David G. Rogers
No. 39877
EXP 12-31-09
CIVIL
STATE OF CALIFORNIA

08-00469

DESIGN BY DGR

DRAWN BY RDH

CHECKED BY DGR

SHEET NO. E1 OF E3

CONCRETE NOTES:

1) GALVANIZED DECK SHALL BE VULCRAFT 1.5VLR 18 GAGE, G60 CLASS COATING. DECK SHALL BE SHOP ATTACHED TO FLOOR BEAMS VIA WELDING, SELF DRILLING FASTENERS OR POWER ACTUATED FASTENERS. MINIMUM OF TWO FASTENERS PER SHEET PER FLOOR BEAM. LONGITUDINAL SHEET LAP SHALL BE ATTACHED WITH SELF-DRILLING FASTENERS AT 36" MINIMUM SPACING. DECK SHALL SPAN A MINIMUM OF 3 BAYS.

2) MATERIALS
   a) REGULAR WEIGHT CONCRETE: f'c = 4000 psi 28-DAY
   b) REINFORCING: GRADE 60 MEETING ASTM A615

3) CONCRETE DESIGN, QUALITY, MIXING AND PLACEMENT SHALL BE IN ACCORDANCE WITH BUILDING CODE REQUIREMENTS FOR STRUCTURAL CONCRETE ACI 318-02 AND SPECIFICATIONS FOR STRUCTURAL CONCRETE ACI 301-02.

4) COMPRESSION TEST SPECIMENS SHALL BE TAKEN DURING CONSTRUCTION TO INSURE COMPLIANCE WITH CONCRETE STRENGTH REQUIREMENTS. EVALUATION AND ACCEPTANCE OF THE COMPRESSIVE STRENGTH OF CONCRETE SHALL BE IN ACCORDANCE WITH THE REQUIREMENTS OF ACI 318-02. ALL CONCRETE, WHICH FAILS TO MEET THE REQUIREMENTS, IS SUBJECT TO REMOVAL AND REPLACEMENT AT THE COST OF THE CONTRACTOR.

5) THE CONTRACTOR MUST EXERCISE CARE TO CONTROL TRAFFIC AND STORAGE OF MATERIALS ON THE FORM DECK BEFORE POURING SLAB.

6) LONGITUDINAL BARS MAY BE SPLICED IF REQUIRED. SPLICE SHALL BE LOCATED AT THE ONE-THIRD POINT OF THE BAY SPAN AND STAGGERED EVERY OTHER LONGITUDINAL BAR. SPLICE LENGTH FOR BARS SHALL BE 40-INCHES.

NOTE: CONCRETE BY OTHERS
ALL REBAR BY OTHERS

REBAR SCHEDULE

Mark	Type	Quantity	Length	Remarks
4D1	Straight	61	11'-4"	EPOXY
6D1	Straight	47	59'-8"	* EPOXY

DIGIT PRECEDING LETTER DENOTES SIZE OF REBAR

* SEE NOTE 6 FOR SPLICING

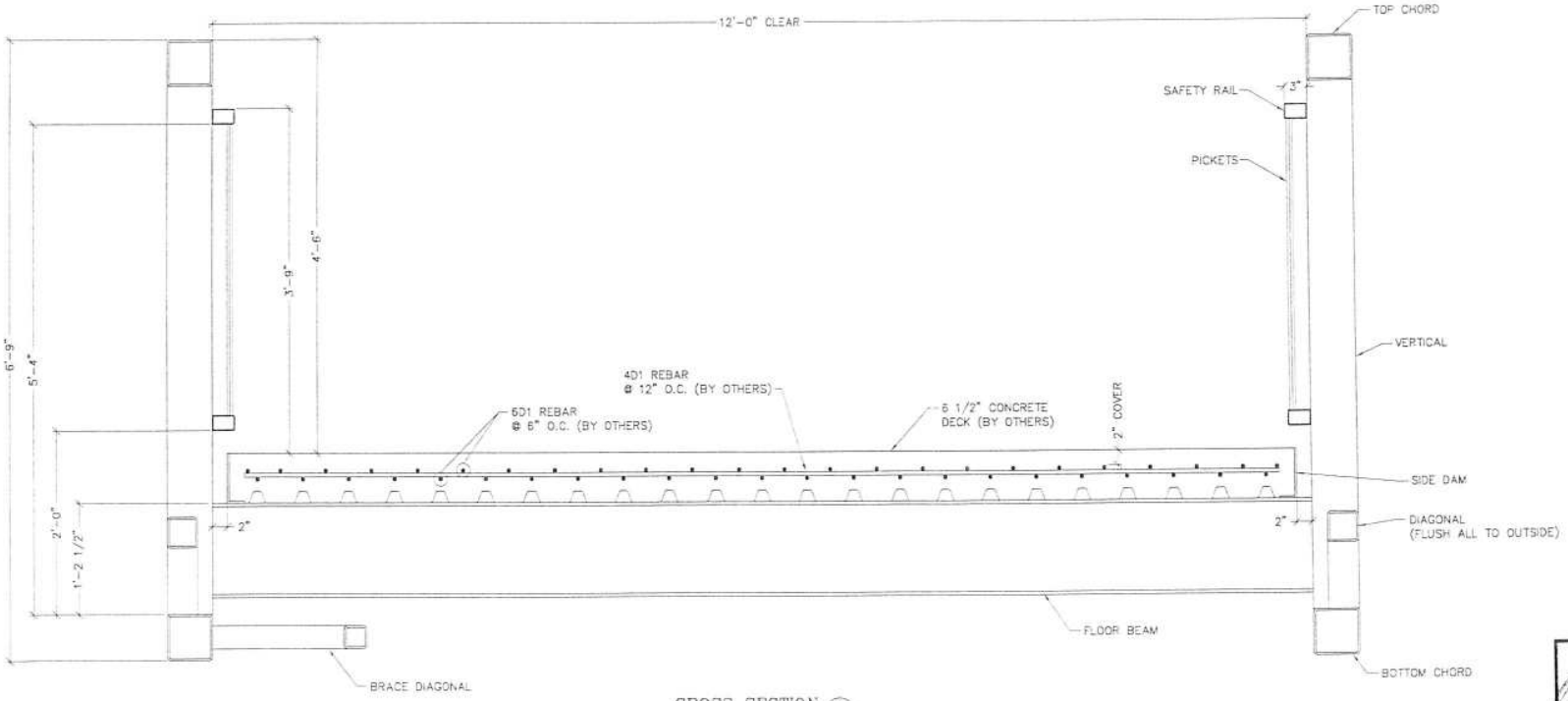

CROSS SECTION (A / E1)

A	ISSUED FOR APPROVAL

BIG R Manufacturing LLC
P.O. BOX 1290, GREELEY, COLORADO 80632
PHONE: (970) 356-9600 FAX: (970) 356-9621
TOLL FREE: 1-800-234-0734 www.bigrmfg.com

60'-0" x 12'-0" BRIDGE

CITY OF SARATOGA

RODEO CREEK BRIDGE SARATOGA, CA

REGISTERED PROFESSIONAL ENGINEER
David G. Rogers
No. 39877
Exp 12-31-09
CIVIL
STATE OF CALIFORNIA

08-00469

DESIGN BY DGR
DRAWN BY RDH
CHECKED BY DGR

SHEET NO. E2 OF E3

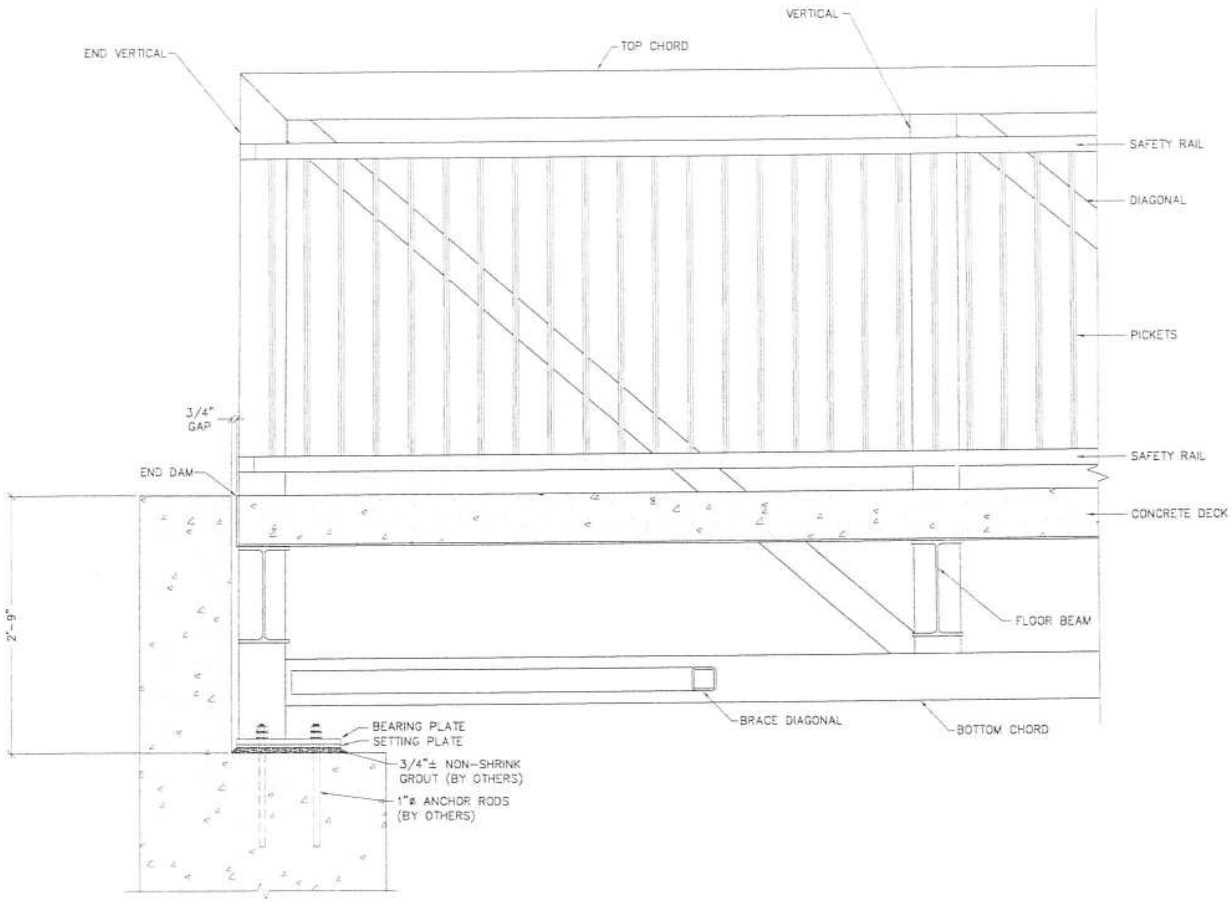

INSIDE ELEVATION

A	ISSUED FOR APPROVAL

BIG R Manufacturing LLC
P.O. BOX 1290, GREELEY, COLORADO 80632
PHONE: (970) 356-9600 FAX: (970) 356-9621
TOLL FREE: 1-800-234-0734 www.bigrmfg.com

60'-0" x 12'-0" BRIDGE

CITY OF SARATOGA

RODEO CREEK BRIDGE SARATOGA, CA

REGISTERED PROFESSIONAL ENGINEER
David G. Eggers
No. 39877
Exp 12-31-07
CIVIL
STATE OF CALIFORNIA

08-00469

DESIGN BY DGR

DRAWN BY RDH

CHECKED BY DGR

SHEET NO. E3 OF E3

MEMBERS	QTY	THICKNESS	SIZE	HOLES
BEARING PLATE	4	3/4"	11 1/4"x 1'-1 1/2"	1 1/4"x 3"
SETTING PLATE	4	3/8"	11 1/4"x 1'-1 1/2"	1 1/4"

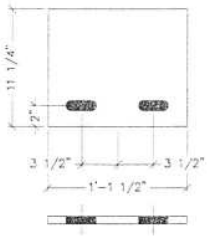

BEARING PLATE
(EXPANSION & FIXED END)

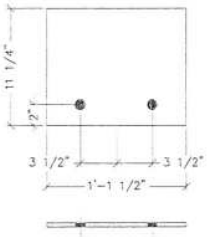

SETTING PLATE
(EXPANSION & FIXED END)

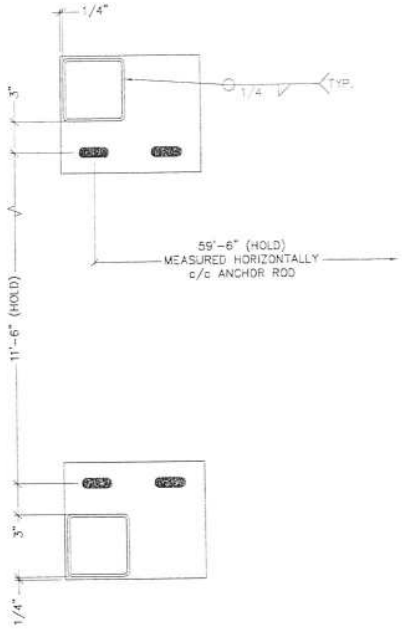

PLAN SHOWING BEARING
PLATE CONNECTION

A	ISSUED FOR APPROVAL

BIG R Manufacturing LLC
P.O. BOX 1290, GREELEY, COLORADO 80632
PHONE: (970) 356-9600 FAX: (970) 356-9621
TOLL FREE: 1-800-234-0734 www.bigrmfg.com

60'-0" x 12'-0" BRIDGE

CITY OF SARATOGA

RODEO CREEK BRIDGE SARATOGA, CA

REGISTERED PROFESSIONAL ENGINEER
David G. Rogers
No. 39677
Exp 12-31-09
CIVIL
STATE OF CALIFORNIA

08-00469

DESIGN BY DGR

DRAWN BY RDH

CHECKED BY DGR

SHEET NO. B1 OF B1

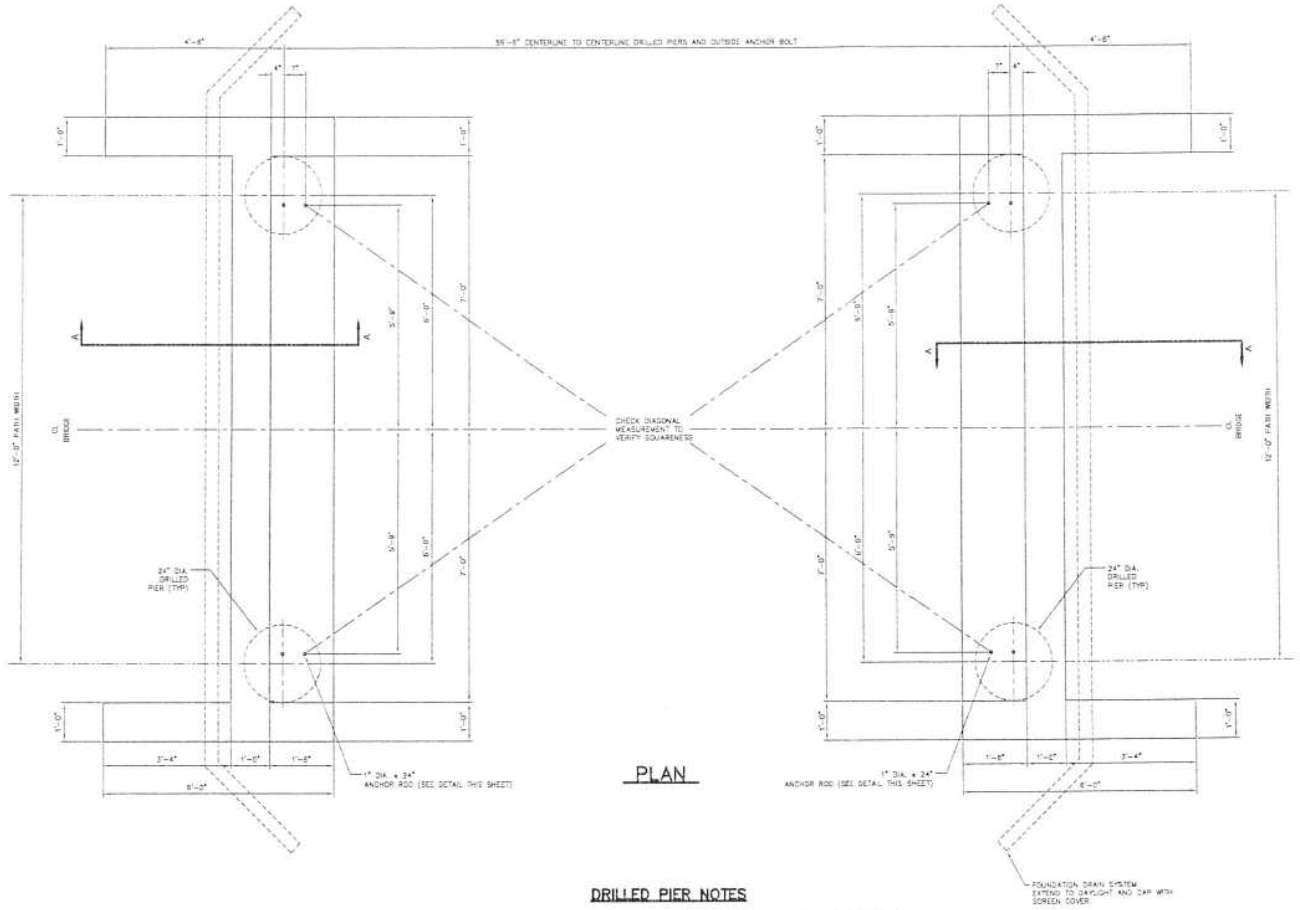

PLAN

GENERAL NOTES

A. DRILLED PIER ALLOWABLE SKIN FRICTION CAPACITY OF 500 PSF WAS DETERMINED FROM INFORMATION FOUND WITHIN THE GEOTECHNICAL ENGINEERING REPORT NO. E0476, AS PREPARED BY COTTON, SHIRES & ASSOCIATES, LOS GATOS, CA. IF UPON EXCAVATION AND DRILLING IT IS DETERMINED THAT THE DESIGN ALLOWABLE CAPACITIES CANNOT BE MET, IMMEDIATELY NOTIFY THE ENGINEER TO DETERMINE APPROPRIATE DESIGN CHANGES. CONTRACTOR WILL BE RESPONSIBLE FOR VERIFYING THESE ALLOWABLE CAPACITIES.

B. ABUTMENT DESIGN WAS BASED ON LOAD REACTIONS FOR A 50' x 12' WIDE PEDESTRIAN BRIDGE (BRIDGE NO. BR08-03469), AS SUPPLIED BY BIG R MANUFACTURING, GREELEY, CO.
1. BRIDGE DEAD WEIGHT OF 68,500 POUNDS.
2. UNIFORM LIVE LOAD OF 85 PSF.
3. VEHICLE LOAD OF 40,000 POUNDS.
4. WIND LOAD OF 25 PSF AGAINST FULL ENCLOSED HEIGHT OF BRIDGE.

C. ABUTMENT DETAILS ARE SIMILAR FOR ABUTMENTS ON EACH SIDE OF THE CROSSING. TOP OF ABUTMENT ELEVATIONS ARE THE SAME ON BOTH SIDES OF THE CROSSING.

D. BACKFILLING OF ABUTMENTS TO BE DONE WITH GOOD, CLEAN GRANULAR MATERIAL, PLACED IN 8" LOOSE LIFTS AND COMPACTED TO 95% OF ITS MAXIMUM DRY DENSITY AS SHOWN BY ASTM D-698 STANDARD PROCTOR TEST.

E. GROUNDWATER INTRUSION COULD OCCUR. THUS THE EXCAVATION SHOULD BE PUMPED DRY BEFORE PLACEMENT OF FORMWORK AND CONCRETE.

F. MATERIALS:

CONCRETE: f'_c = 4000 PSI 28-DAY STRENGTH (AIR ENTRAINED)
REINFORCING: GRADE 60, F_y = 60,000 PSI

THE DESIGN OF THIS ABUTMENT HAS CONSIDERED ONLY THE STRUCTURAL INTEGRITY OF THE ABUTMENT ITSELF IN CONJUNCTION WITH THE DRILLED PIER CAPACITY LISTED (SEE NOTE A). THE DESIGN OF SLOPE STABILIZATION, SCOUR CONTROL, OR ANY OTHER SITE SPECIFIC ISSUES SHALL BE THE RESPONSIBILITY OF THE OWNER AND/OR THE PROJECT ENGINEER.

CONCRETE NOTES

1. BAR REINFORCEMENT SHALL BE GRADE 60 MINIMUM AND CONFORM TO THE REQUIREMENTS OF ASTM A 615.

2. CONCRETE AND REINFORCING TO BE AS SHOWN ON THESE DRAWINGS AND TO BE FURNISHED AND INSTALLED BY OTHERS. THE COMPRESSIVE STRENGTH OF THE CONCRETE (f'_c) MUST BE A MINIMUM OF 4,000 PSI (28 DAY STRENGTH), WITH A MAXIMUM AGGREGATE SIZE OF 3/4".

4. CONCRETE COVER AS SHOWN ON THESE DRAWINGS SHALL BE STRICTLY MAINTAINED.

5. CONCRETE DESIGN, QUALITY, MIXING, AND PLACING SHALL BE IN ACCORDANCE WITH BUILDING CODE REQUIREMENTS FOR STRUCTURAL CONCRETE ACI 318 AND SPECIFICATIONS FOR STRUCTURAL CONCRETE ACI 301.

6. COMPRESSION TEST SPECIMENS SHALL BE TAKEN DURING CONSTRUCTION TO INSURE COMPLIANCE WITH CONCRETE STRENGTH REQUIREMENTS. EVALUATION AND ACCEPTANCE OF THE COMPRESSIVE STRENGTH OF CONCRETE SHALL BE IN ACCORDANCE WITH THE REQUIREMENTS OF ACI 318, CHAPTER 5 "CONCRETE QUALITY, MIXING, AND PLACING". ALL CONCRETE WHICH FAILS TO MEET THE ACI REQUIREMENTS IS SUBJECT TO REMOVAL AND REPLACEMENT AT THE COST OF THE CONTRACTOR.

7. THESE SPECIFICATIONS SHALL BE THE MINIMUM REQUIREMENTS FOR THE FOUNDATION SYSTEM. MORE STRINGENT REQUIREMENTS SPECIFIED BY LOCAL GOVERNING CODES MAY BE APPLICABLE.

LENGTH (INCHES)			
BAR SIZE	HOOK X	SPLICE	BEND DIA
#4	8"	21"	3.00"
#5	10"	26"	3.75"
#6	12"	31"	4.50"

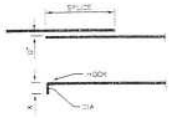

THE TABLES SHOWN ARE FOR f'_c = 4000 PSI (MINIMUM) AND f_y = 60,000 PSI

STANDARD SPLICE AND HOOK LENGTH DETAILS

NORMAL WEIGHT CONCRETE (145 PCF)

DRILLED PIER NOTES

1. PIERS SHALL BE DRILLED PLUMB WITH ALL SOIL MATERIAL REMOVED FROM THE SHAFT.

2. DUE TO THE POSSIBLE PRESENCE OF GROUNDWATER AND LOOSE SOIL, A STEEL CASING SHALL BE USED DURING INSTALLATION OF THE PIERS. THE CASING SHOULD BE EXTENDED TO BOTTOM OF DRILLED PIER ELEVATION. CASING SHOULD BE SLOWLY REMOVED AS CONCRETE IS PLACED.

3. WATER WILL BE PRESENT IN THE PIER HOLE AND MUST BE PUMPED DRY, OR USE OF THE TREMIE METHOD OF CONCRETE/WATER REPLACEMENT.

4. THE REINFORCING CAGE SHALL BE FULLY ASSEMBLED PRIOR TO PLACEMENT IN THE DRILLED SHAFT. BLOCKS AND OTHER SPACING DEVICES SHALL BE USED TO PREVENT THE BOTTOM OF THE REINFORCING FROM TOUCHING THE BOTTOM OF THE SHAFT, AS WELL AS PROPERLY ALIGN THE REINFORCING TO PROVIDE THE INDICATED SIDE WALL COVER.

5. CONCRETE PLACEMENT SHOULD BE DIRECTED THROUGH A TREMIE. THE TREMIE SHALL MAINTAIN AT LEAST 5' INTO THE WET CONCRETE DURING PLACEMENT, AND SHOULD BE SLOWLY EXTRACTED AS CONCRETE IS ADDED. IT SHALL BE PLACED VERTICAL THROUGH THE CENTER OF THE SHAFT WITHOUT HITTING THE SIDES OF THE PIER OR REINFORCEMENT TO REDUCE SEGREGATION OF AGGREGATES. CONCRETE SHALL HAVE A MINIMUM SLUMP OF 5" (BUT NOT MORE THAN 7") TO AVOID HONEY-COMBING. AS THE CASING IS EXTRACTED, CARE SHOULD BE TAKEN TO MAINTAIN A POSITIVE HEAD OF PLASTIC CONCRETE AND MINIMIZE THE INTRUSION OF WATER SEEPAGE OR SLOUGHING SOILS.

6. DRILLED PIERS SHALL BE ALLOWED TO PROPERLY CURE FOR A MINIMUM OF SEVEN DAYS PRIOR TO THE PLACEMENT OF FORM WORK AND REINFORCING FOR THE PIER CAPS.

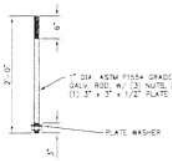

ANCHOR ROD DETAIL

6 REQ'RED

REGISTERED PROFESSIONAL ENGINEER
David G. Rogers
No. 39877
EXP 12-31-09
CIVIL
STATE OF CALIFORNIA

08-00469

DESIGN BY DGR

DRAWN BY DGR

CHECKED BY DGR

SHEET NO. 1 OF 2

BIG R Manufacturing LLC
P.O. BOX 1290, GREELEY, COLORADO 80632
PHONE: (970) 356-9600 FAX: (970) 356-9621
TOLL FREE: 1-800-234-0734 www.bigrmfg.com

RODEO CREEK BRIDGE

ABUTMENTS

SARATOGA, CA

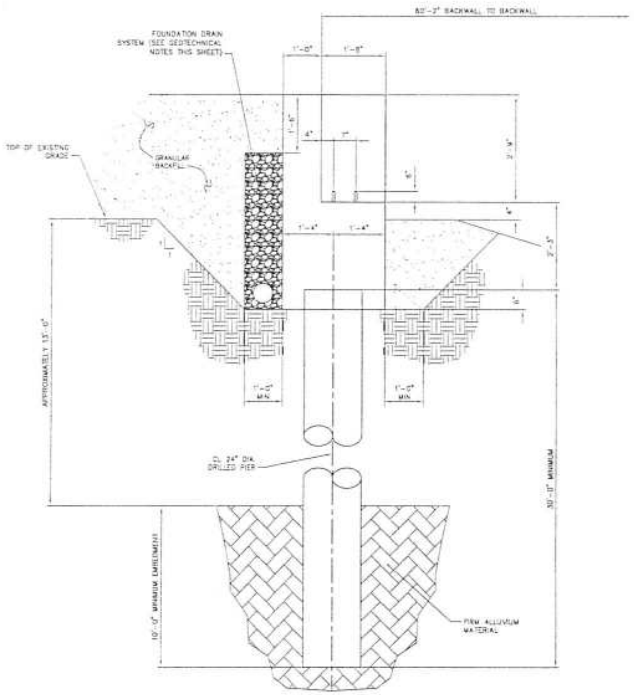

ABUTMENT SECTION A–A

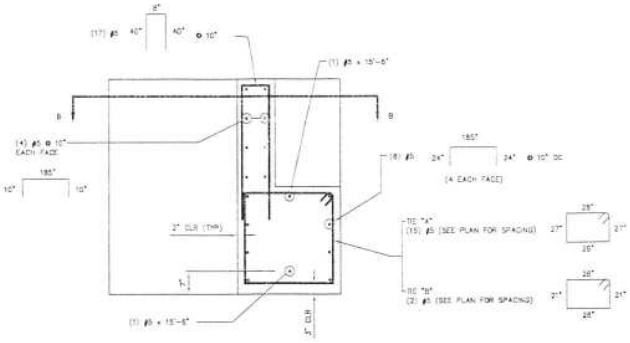

PIER CAP REINFORCING SECTION A–A

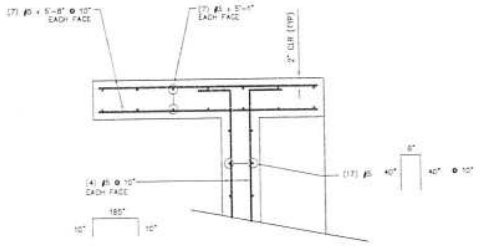

SIDE WING WALL SECTION B–B

FOUNDATION DRAIN:

A MINIMUM 12–INCH WIDE CONTINUOUS BLANKET OF EITHER CALTRANS CLASS 2 PERMEABLE MATERIAL OR 3/4–INCH X 1/2–INCH CLEAN CRUSH DRAINROCK ENCLOSED IN MIRAFI 140N FILTER FABRIC. DRAIN SHALL BE A 4–INCH DIAMETER PVC SCHEDULE 40 PERFORATED DRAIN PIPE, PLACED NEAR THE BOTTOM OF THE DRAINROCK (PERFORATIONS DOWN). SURROUNDED BY A MINIMUM OF 4–INCHES OF DRAINROCK WITH AT LEAST 2–INCHES OF DRAINROCK UNDERLYING THE PIPE. DRAIN SHALL SLOPE A MINIMUM OF 1/2–PERCENT AND COLLECT INTO A 4–INCH DIAMETER NON–PERFORATED SHCEDULE 40 PVC PIPE SLOPED AT A MINIMUM 1–PERCENT TO DISCHARGE TO DAYLIGHT, WITH A SCREENED COVER PLATE.

CONTRACTOR NOTE:
DO NOT FABRICATE DRILLED PIER REINFORCING CAGE PRIOR TO DETERMINING FINAL PIER LENGTH. MINIMUM 10'–0" EMBEDMENT INTO FIRM ALLUVIUM MATERIAL MUST BE OBTAINED, IRREGARDLESS OF WHERE TOP OF FIRM ALLUVIUM MATERIAL IS ENCOUNTERED.

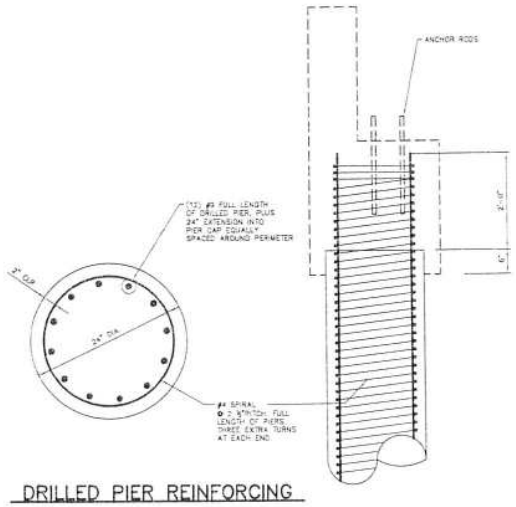

DRILLED PIER REINFORCING

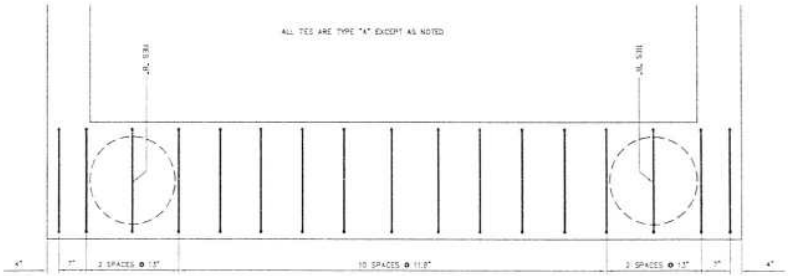

TIE SPACING PLAN

REGISTERED PROFESSIONAL ENGINEER David G. Rogers No. 59877 EXP 12-31-09 CIVIL STATE OF CALIFORNIA

08–00469	
DESIGN BY	DGR
DRAWN BY	DGR
CHECKED BY	DGR
SHEET NO.	2 OF 2

BIG R Manufacturing LLC
P.O. BOX 1290, GREELEY, COLORADO 80632
PHONE: (970) 356–9600 FAX: (970) 356–9621
TOLL FREE: 1–800–234–0734 www.bigrmfg.com

RODEO CREEK BRIDGE
ABUTMENTS
SARATOGA, CA

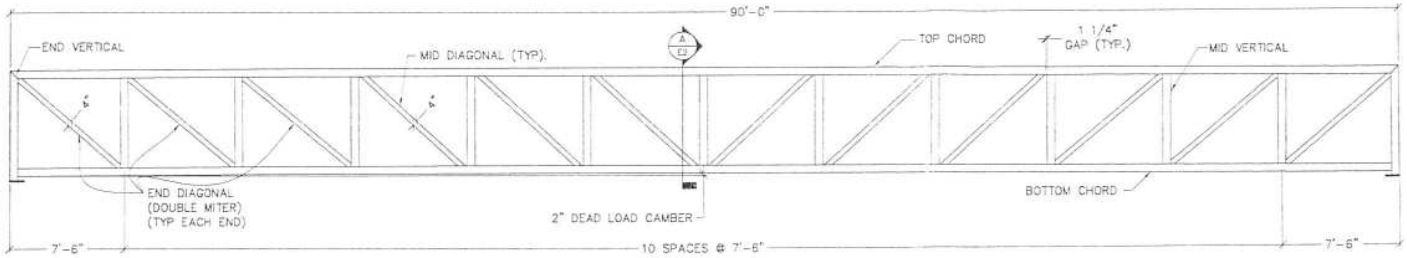

ELEVATION

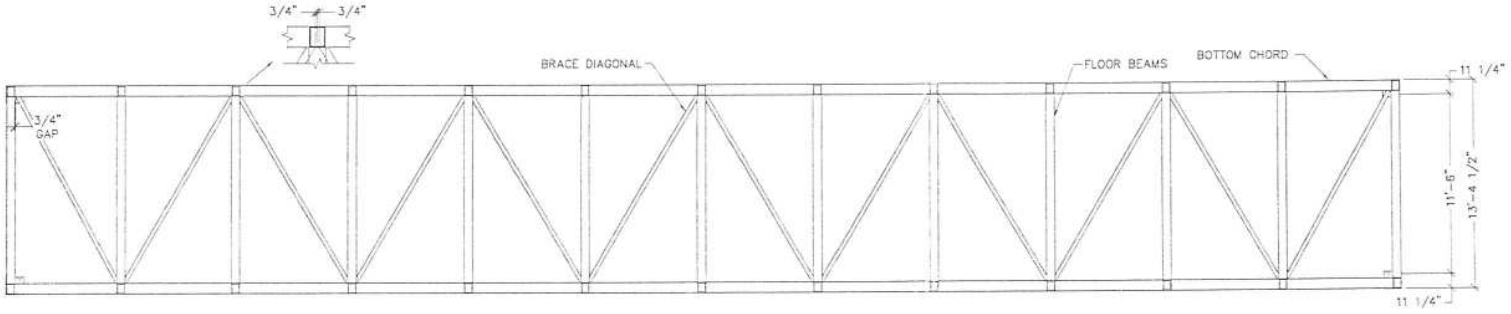

PLAN VIEW

GENERAL NOTES:

ALLOWABLE DESIGN STRESSES ARE IN ACCORDANCE WITH THE STEEL CONSTRUCTION MANUAL 13th EDITION, BY AISC.

1) MATERIALS: UNLESS NOTED OTHERWISE

a) TUBING:	ASTM A500 Gr C OR A847	Fy = 50 ksi MIN.
b) SHAPES:	ASTM A992 OR A588	Fy = 50 ksi
c) PLATES:	ASTM A588 OR A242	Fy = 50 ksi
d) ANCHOR ROD:	ASTM F1554 Gr 55	Fy = 55 ksi (GALVANIZED)

2) THE GAS METAL ARC WELDING OR FLUX CORED ARC WELDING PROCESS WILL BE USED.

3) ALL TOP AND BOTTOM CHORD SHOP SPLICES TO BE COMPLETE PENETRATION TYPE WELDS.

4) DESIGN LOADINGS:
a) 85 psf UNIFORM LIVE LOAD
b) 40,000 lb VEHICLE LOADING
c) 25 psf WIND LOADING AGAINST HEIGHT OF STRUCTURE AS IF ENCLOSED.

5) FINISH:
ALL SURFACES OF STEEL SHALL BE CLEANED IN ACCORDANCE WITH STEEL STRUCTURES PAINTING COUNCIL SURFACE PREPARATION SPECIFICATIONS NO. 6 COMMERCIAL BLAST CLEANING, SSPC-SP6 – LATEST EDITION.

TWO COAT SYSTEM:

PRIMER COAT OF CORDTHANE 1 GALVPAC ONE PACK ZINC PRIMER, BY SHERWIN WILLIAMS, 3.0–4.0 DFT.

FINISH COAT OF FAST CLAD DTM URETHANE, BY SHERWIN WILLIAMS, 6.0–9.0 DFT. COLOR TO BE DETERMINED BY CUSTOMER.

6) ALL WELDS SHALL BE SEALED

LIFTING WEIGHT = 31000 LBS

MEMBERS	SIZE
TOP CHORD	HSS 8x6
BOTTOM CHORD	HSS 8x6
END VERTICAL	HSS 8x6
MID VERTICAL	HSS 8x6
END DIAGONAL	HSS 6x4
MID DIAGONAL	HSS 5x4
BRACE DIAGONAL	HSS 3x3
FLOOR BEAMS	W 12
SAFETY RAIL	HSS 3x2
PICKETS	BAR 1/2" SQ.
SIDE DAM	BENT PL 1/4"
END DAM	PL 1/4"
ANCHOR ROD	1"ø (BY OTHERS)

A	ISSUED FOR APPROVAL

BIG R Manufacturing LLC
P.O. BOX 1290, GREELEY, COLORADO 80632
PHONE: (970) 356-9600 FAX: (970) 356-9621
TOLL FREE: 1-800-234-0734 www.bigrmfg.com

90'-0" x 12'-0" BRIDGE

CITY OF SARATOGA

SARATOGA CREEK BRIDGE SARATOGA, CA

REGISTERED PROFESSIONAL ENGINEER
David G. Rogers
No. 39877
EXP 12-31-09
CIVIL
STATE OF CALIFORNIA

08-00468

DESIGN BY DGR

DRAWN BY RDH

CHECKED BY DGR

SHEET NO. E1 OF E3

CONCRETE NOTES:

1) GALVANIZED DECK SHALL BE VULCRAFT 1.5VLR 18 GAGE, G60 CLASS COATING. DECK SHALL BE SHOP ATTACHED TO FLOOR BEAMS VIA WELDING, SELF DRILLING FASTENERS OR POWER ACTUATED FASTENERS. MINIMUM OF TWO FASTENERS PER SHEET PER FLOOR BEAM. LONGITUDINAL SHEET LAP SHALL BE ATTACHED WITH SELF-DRILLING FASTENERS AT 36" MINIMUM SPACING. DECK SHALL SPAN A MINIMUM OF 3 BAYS.

2) MATERIALS
   a) REGULAR WEIGHT CONCRETE: f'c = 4000 psi 28-DAY
   b) REINFORCING: GRADE 60 MEETING ASTM A615

3) CONCRETE DESIGN, QUALITY, MIXING AND PLACEMENT SHALL BE IN ACCORDANCE WITH BUILDING CODE REQUIREMENTS FOR STRUCTURAL CONCRETE ACI 318-02 AND SPECIFICATIONS FOR STRUCTURAL CONCRETE ACI 301-02.

4) COMPRESSION TEST SPECIMENS SHALL BE TAKEN DURING CONSTRUCTION TO INSURE COMPLIANCE WITH CONCRETE STRENGTH REQUIREMENTS. EVALUATION AND ACCEPTANCE OF THE COMPRESSIVE STRENGTH OF CONCRETE SHALL BE IN ACCORDANCE WITH THE REQUIREMENTS OF ACI 318-02. ALL CONCRETE, WHICH FAILS TO MEET THE REQUIREMENTS, IS SUBJECT TO REMOVAL AND REPLACEMENT AT THE COST OF THE CONTRACTOR.

5) THE CONTRACTOR MUST EXERCISE CARE TO CONTROL TRAFFIC AND STORAGE OF MATERIALS ON THE FORM DECK BEFORE POURING SLAB.

6) LONGITUDINAL BARS MAY BE SPLICED IF REQUIRED. SPLICE SHALL BE LOCATED AT THE ONE-THIRD POINT OF THE BAY SPAN AND STAGGERED EVERY OTHER LONGITUDINAL BAR. SPLICE LENGTH FOR BARS SHALL BE 40-INCHES.

NOTE: CONCRETE BY OTHERS
ALL REBAR BY OTHERS

REBAR SCHEDULE

Mark	Type	Quantity	Length	Remarks
4D1	Straight	91	11'-4"	EPOXY
6D1	Straight	47	89'-8"	* EPOXY

DIGIT PRECEDING LETTER DENOTES SIZE OF REBAR

* SEE NOTE 6 FOR SPLICING

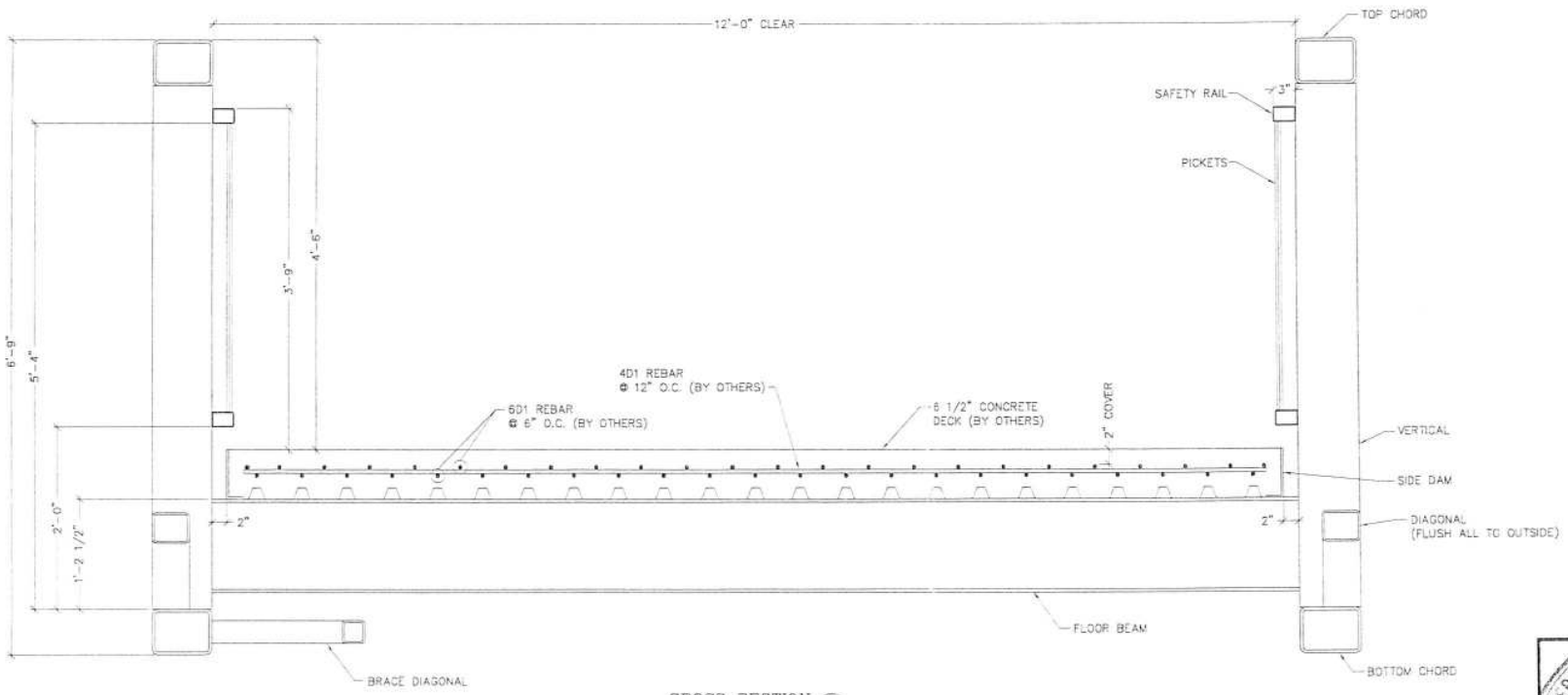

CROSS SECTION (A / E1)

A	ISSUED FOR APPROVAL

BIG R Manufacturing LLC
P.O. BOX 1290, GREELEY, COLORADO 80632
PHONE: (970) 356-9600 FAX: (970) 356-9621
TOLL FREE: 1-800-234-0734 www.bigrmfg.com

90'-0" x 12'-0" BRIDGE

CITY OF SARATOGA

SARATOGA CREEK BRIDGE SARATOGA, CA

REGISTERED PROFESSIONAL ENGINEER
David G. Rogers
No. 59877
Exp. 12-31-09
CIVIL
STATE OF CALIFORNIA

08-00468

DESIGN: BY DGR
DRAWN: BY RDH
CHECKED BY DGR

SHEET NO. E2 OF E3

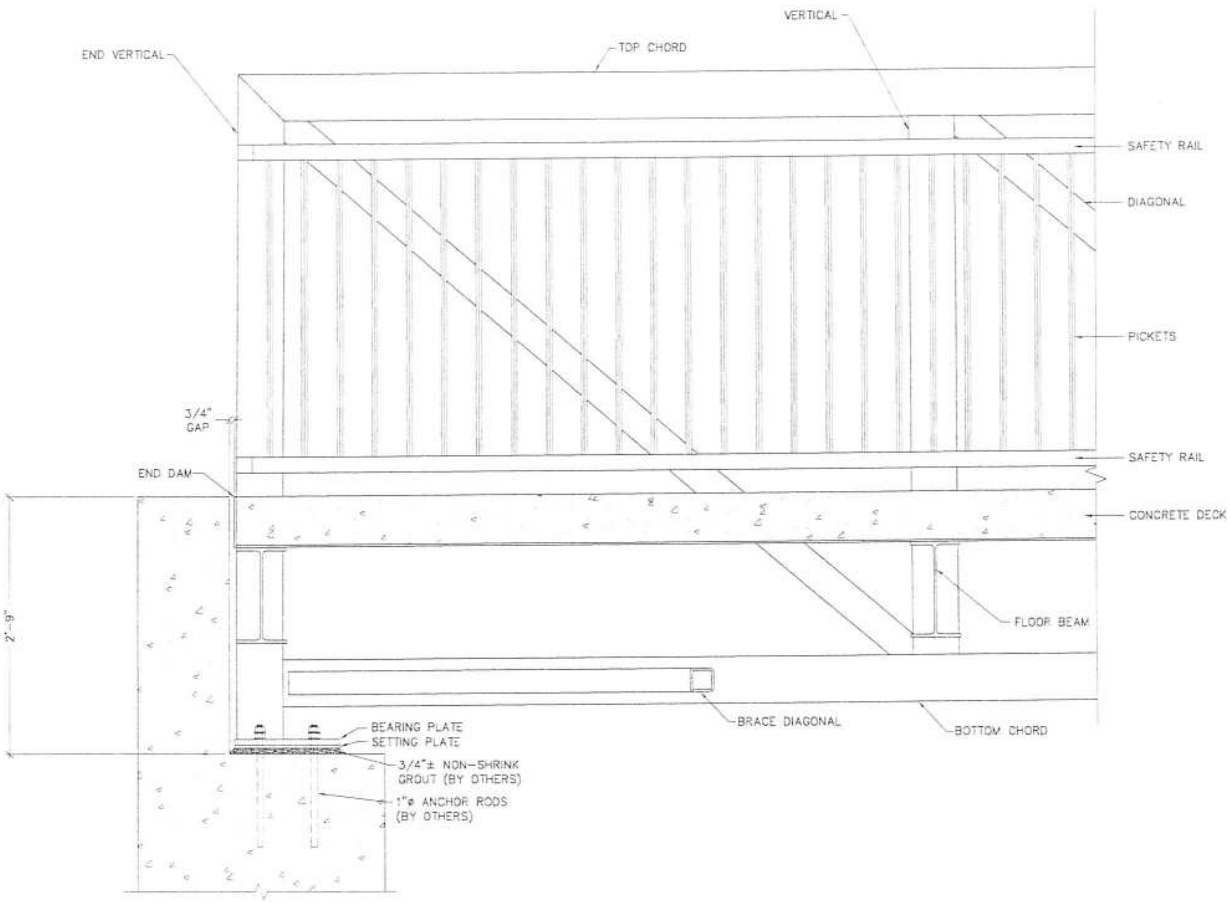

INSIDE ELEVATION

A	ISSUED FOR APPROVAL

BIG R Manufacturing LLC
P.O. BOX 1290, GREELEY, COLORADO 80632
PHONE: (970) 356-9600 FAX: (970) 356-9621
TOLL FREE: 1-800-234-0734 www.bigrmfg.com

90'-0" x 12'-0" BRIDGE

CITY OF SARATOGA

SARATOGA CREEK BRIDGE SARATOGA, CA

REGISTERED PROFESSIONAL ENGINEER
David G. Rogers
No. 39877
EXP 12-31-09
CIVIL
STATE OF CALIFORNIA

08-00468

DESIGN BY DGR
DRAWN BY RDH
CHECKED BY DGR
SHEET NO. E3 OF E3

MEMBERS	QTY	THICKNESS	SIZE	HOLES
BEARING PLATE	4	3/4"	1'-1 1/4"x 1'-1 1/2"	1 1/4"x 3"
SETTING PLATE	4	3/8"	1'-1 1/4"x 1'-1 1/2"	1 1/4"

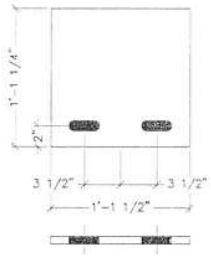

BEARING PLATE
(EXPANSION & FIXED END)

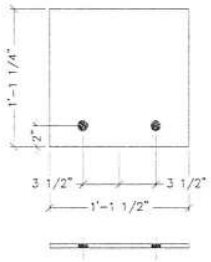

SETTING PLATE
(EXPANSION & FIXED END)

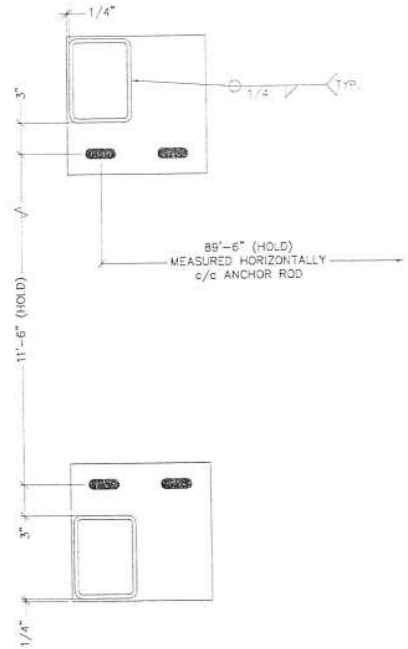

PLAN SHOWING BEARING
PLATE CONNECTION

A	ISSUED FOR APPROVAL

BIG R Manufacturing LLC
P.O. BOX 1290, GREELEY, COLORADO 80632
PHONE: (970) 356-9600 FAX: (970) 356-9621
TOLL FREE: 1-800-234-0734 www.bigrmfg.com

90'-0" x 12'-0" BRIDGE

CITY OF SARATOGA

SARATOGA CREEK BRIDGE SARATOGA CA

REGISTERED PROFESSIONAL ENGINEER
David G. Rogers
No. 39877
EXP 12-31-09
CIVIL
STATE OF CALIFORNIA

08-00468

DESIGN BY DGR

DRAWN BY RDH

CHECKED BY DGR

SHEET NO. B1 OF B1

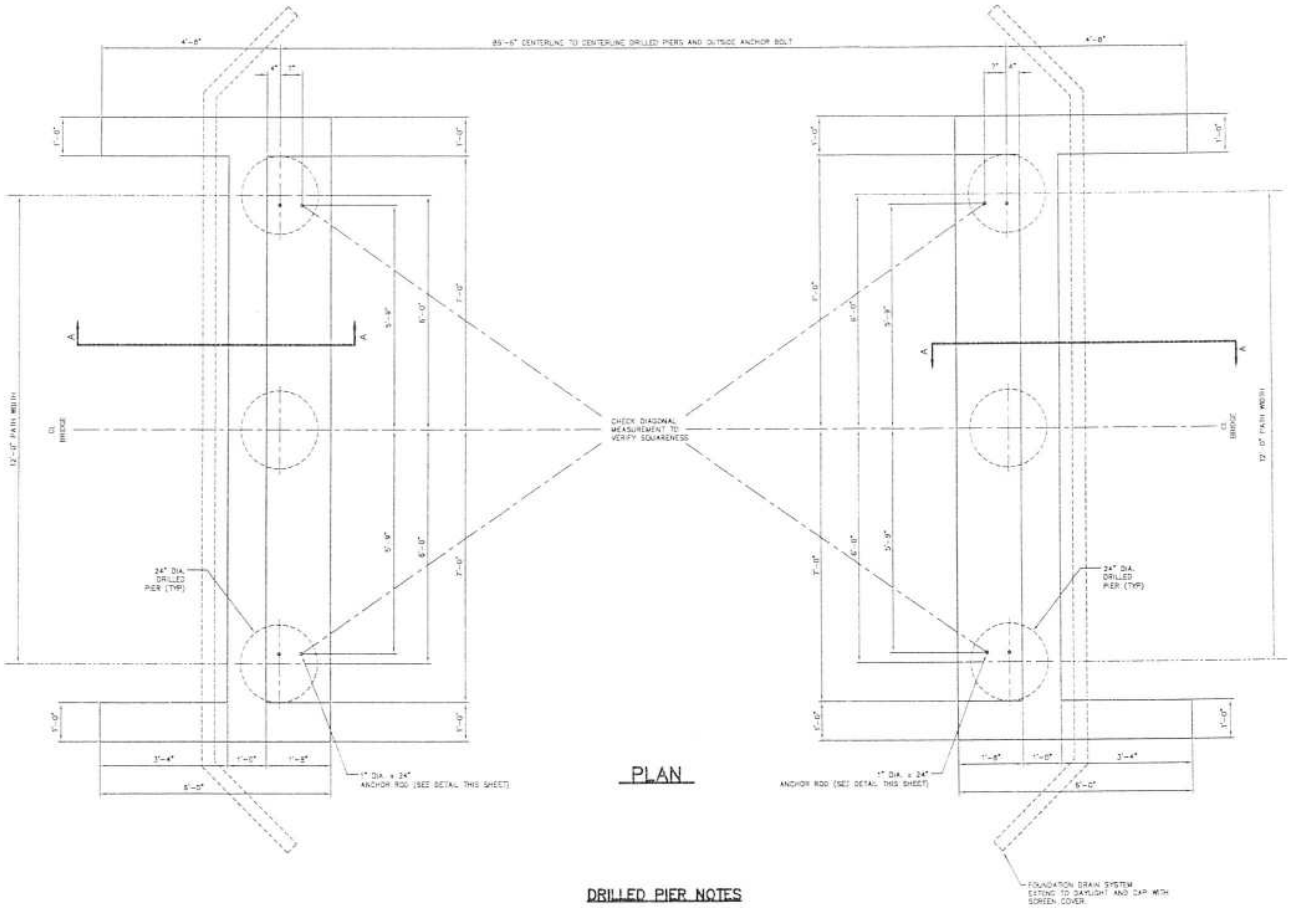

PLAN

GENERAL NOTES

A. DRILLED PIER ALLOWABLE SKIN FRICTION CAPACITY OF 500 PSF WAS DETERMINED FROM INFORMATION FOUND WITHIN THE GEOTECHNICAL ENGINEERING REPORT NO. E0476, AS PREPARED BY COTTON, SHIRES & ASSOCIATES, LOS GATOS, CA. IF UPON EXCAVATION AND DRILLING IT IS DETERMINED THAT THE DESIGN ALLOWABLE CAPACITIES CANNOT BE MET, IMMEDIATELY NOTIFY THE ENGINEER TO DETERMINE APPROPRIATE DESIGN CHANGES. CONTRACTOR WILL BE RESPONSIBLE FOR VERIFYING THESE ALLOWABLE CAPACITIES.

B. ABUTMENT DESIGN WAS BASED ON LOAD REACTIONS FOR A 90' x 12' WIDE PEDESTRIAN BRIDGE (BRIDGE NO. BR08-00468), AS SUPPLIED BY BIG R MANUFACTURING, GREELEY, CO.
   1. BRIDGE DEAD WEIGHT OF 110,000 POUNDS
   2. UNIFORM LIVE LOAD OF 85 PSF
   3. VEHICLE LOAD OF 40,000 POUNDS
   4. WIND LOAD OF 25 PSF AGAINST FULL ENCLOSED HEIGHT OF BRIDGE

C. ABUTMENT DETAILS ARE SIMILAR FOR ABUTMENTS ON EACH SIDE OF THE CROSSING. TOP OF ABUTMENT ELEVATIONS ARE THE SAME ON BOTH SIDES OF THE CROSSING.

D. BACKFILLING OF ABUTMENTS TO BE DONE WITH GOOD, CLEAN, GRANULAR MATERIAL, PLACED IN 8" LOOSE LIFTS AND COMPACTED TO 95% OF ITS MAXIMUM DRY DENSITY AS SHOWN BY ASTM D-698 STANDARD PROCTOR TEST.

E. GROUNDWATER INTRUSION COULD OCCUR. THUS THE EXCAVATION SHOULD BE PUMPED DRY BEFORE PLACEMENT OF FORMWORK AND CONCRETE.

F. MATERIALS:

CONCRETE: $f'c$ = 4000 PSI 28-DAY STRENGTH (AIR ENTRAINED)
REINFORCING: GRADE 60, Fy = 60,000 PSI

THE DESIGN OF THIS ABUTMENT HAS CONSIDERED ONLY THE STRUCTURAL INTEGRITY OF THE ABUTMENT ITSELF IN CONJUNCTION WITH THE DRILLED PIER CAPACITY LISTED (SEE NOTE A). THE DESIGN OF SLOPE STABILIZATION, SCOUR CONTROL, OR ANY OTHER SITE SPECIFIC ISSUES SHALL BE THE RESPONSIBILITY OF THE OWNER AND/OR THE PROJECT ENGINEER.

CONCRETE NOTES

1. BAR REINFORCEMENT SHALL BE GRADE 60 MINIMUM AND CONFORM TO THE REQUIREMENTS OF ASTM A 615.

2. CONCRETE AND REINFORCING TO BE AS SHOWN ON THESE DRAWINGS AND TO BE FURNISHED AND INSTALLED BY OTHERS. THE COMPRESSIVE STRENGTH OF THE CONCRETE ($f'c$) MUST BE A MINIMUM OF 4,000 PSI (28 DAY STRENGTH) WITH A MAXIMUM AGGREGATE SIZE OF 3/4".

4. CONCRETE COVER AS SHOWN ON THESE DRAWINGS SHALL BE STRICTLY MAINTAINED.

5. CONCRETE DESIGN, QUALITY, MIXING, AND PLACING SHALL BE IN ACCORDANCE WITH BUILDING CODE REQUIREMENTS FOR STRUCTURAL CONCRETE ACI 318 AND SPECIFICATIONS FOR STRUCTURAL CONCRETE ACI 301.

6. COMPRESSION TEST SPECIMENS SHALL BE TAKEN DURING CONSTRUCTION TO INSURE COMPLIANCE WITH CONCRETE STRENGTH REQUIREMENTS. EVALUATION AND ACCEPTANCE OF THE COMPRESSIVE STRENGTH OF CONCRETE SHALL BE IN ACCORDANCE WITH THE REQUIREMENTS OF ACI 318, CHAPTER 5 "CONCRETE QUALITY, MIXING, AND PLACING". ALL CONCRETE WHICH FAILS TO MEET THE ACI REQUIREMENTS IS SUBJECT TO REMOVAL AND REPLACEMENT AT THE COST OF THE CONTRACTOR.

7. THESE SPECIFICATIONS SHALL BE THE MINIMUM REQUIREMENTS FOR THE FOUNDATION SYSTEM. MORE STRINGENT REQUIREMENTS SPECIFIED BY LOCAL GOVERNING BODIES MAY BE APPLICABLE.

LENGTH (INCHES)			
BAR SIZE	HOOK X	SPLICE	BEND DIA
#4	8"	21"	3.00"
#5	10"	26"	3.75"
#6	20"	31"	4.50"

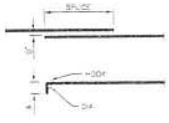

THE TABLES SHOWN ARE FOR $f'c$ = 4000 PSI (MINIMUM) AND Fy = 60,000 PSI

STANDARD SPLICE AND HOOK LENGTH DETAILS

NORMAL WEIGHT CONCRETE (145 PCF)

DRILLED PIER NOTES

1. PIERS SHALL BE DRILLED PLUMB WITH ALL SOIL MATERIAL REMOVED FROM THE SHAFT.

2. DUE TO THE POSSIBLE PRESENCE OF GROUNDWATER AND LOOSE SOIL, A STEEL CASING SHALL BE USED DURING INSTALLATION OF THE PIERS. THE CASING SHOULD BE EXTENDED TO BOTTOM OF DRILLED PIER ELEVATION. CASING SHOULD BE SLOWLY REMOVED AS CONCRETE IS PLACED.

3. WATER WILL BE PRESENT IN THE PIER HOLE AND MUST BE PUMPED DRY, OR USE OF THE TREMIE METHOD OF CONCRETE/WATER REPLACEMENT.

4. THE REINFORCING CAGE SHALL BE FULLY ASSEMBLED PRIOR TO PLACEMENT IN THE DRILLED SHAFT. BLOCKS AND OTHER SPACING DEVICES SHALL BE USED TO PREVENT THE BOTTOM OF THE REINFORCING FROM TOUCHING THE BOTTOM OF THE SHAFT, AS WELL AS PROPERLY ALIGN THE REINFORCING TO PROVIDE THE INDICATED SIDE WALL COVER.

5. CONCRETE PLACEMENT SHOULD BE DIRECTED THROUGH A TREMIE. THE TREMIE SHALL MAINTAIN AT LEAST 5' INTO THE WET CONCRETE DURING PLACEMENT, AND SHOULD BE SLOWLY EXTRACTED AS CONCRETE IS ADDED. IT SHALL BE PLACED VERTICAL THROUGH THE CENTER OF THE SHAFT WITHOUT HITTING THE SIDES OF THE PIER OR REINFORCEMENT TO REDUCE SEGREGATION OF AGGREGATES. CONCRETE SHALL HAVE A MINIMUM SLUMP OF 5" (BUT NOT MORE THAN 7") TO AVOID HONEY-COMBING. AS THE CASING IS EXTRACTED, CARE SHOULD BE TAKEN TO MAINTAIN A POSITIVE HEAD OF PLASTIC CONCRETE AND MINIMIZE THE INTRUSION OF WATER SEEPAGE OR SLOUGHING SOILS.

6. DRILLED PIERS SHALL BE ALLOWED TO PROPERLY CURE FOR A MINIMUM OF SEVEN DAYS PRIOR TO THE PLACEMENT OF FORM WORK AND REINFORCING FOR THE PIER CAPS.

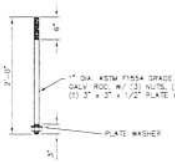

ANCHOR ROD DETAIL

8 REQUIRED

BIG R Manufacturing LLC
P.O. BOX 1290, GREELEY, COLORADO 80632
PHONE: (970) 356-9600 FAX: (970) 356-9621
TOLL FREE: 1-800-234-0734 www.bigrmfg.com

SARATOGA CREEK BRIDGE

ABUTMENTS

SARATOGA, CA

REGISTERED PROFESSIONAL ENGINEER
DARYL G. GRIFFITHS
No. 39877
EXP 12-31-09
CIVIL
STATE OF CALIFORNIA

08-00468

DESIGN BY DGR

DRAWN BY DGR

CHECKED BY DGR

SHEET NO. 1 OF 2

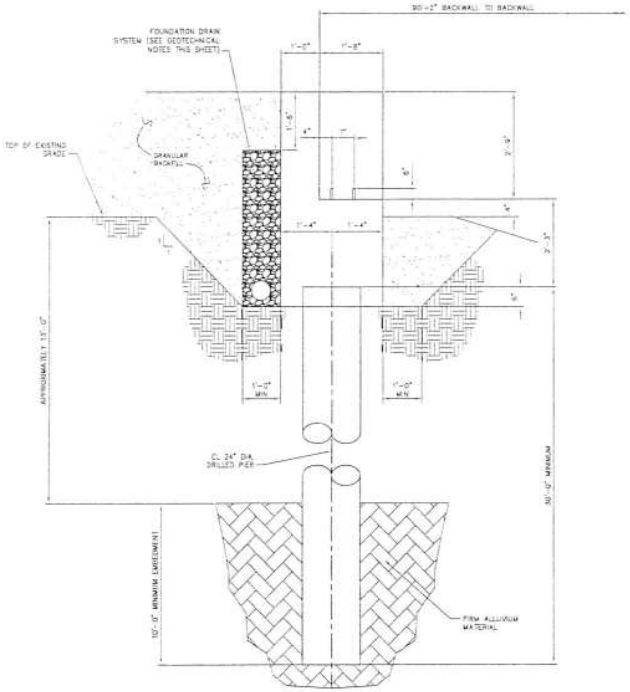

ABUTMENT SECTION A–A

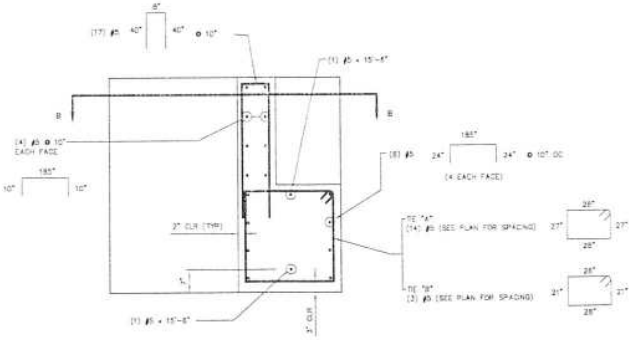

PIER CAP REINFORCING SECTION A–A

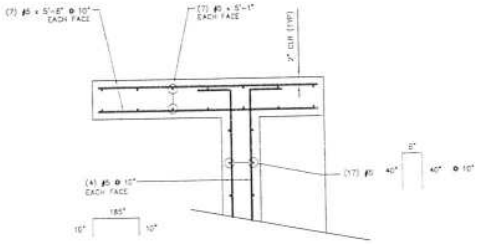

SIDE WING WALL SECTION B–B

FOUNDATION DRAIN:

A MINIMUM 12–INCH WIDE CONTINUOUS BLANKET OF EITHER CALTRANS CLASS 2 PERMEABLE MATERIAL OR 3/4–INCH X 1/2–INCH CLEAN CRUSH DRAINROCK ENCLOSED IN MIRAFI 140N FILTER FABRIC. DRAIN SHALL BE A 4–INCH DIAMETER PVC SCHEDULE 40 PERFORATED DRAIN PIPE, PLACED NEAR THE BOTTOM OF THE DRAINROCK (PERFORATIONS DOWN), SURROUNDED BY A MINIMUM OF 4–INCHES OF DRAINROCK WITH AT LEAST 2–INCHES OF DRAINROCK UNDERLYING THE PIPE. DRAIN SHALL SLOPE A MINIMUM OF 1/2–PERCENT AND COLLECT INTO A 4–INCH DIAMETER NON–PERFORATED SHCEDULE 40 PVC PIPE SLOPED AT A MINIMUM 1–PERCENT TO DISCHARGE TO DAYLIGHT, WITH A SCREENED COVER PLATE.

CONTRACTOR NOTE:
DO NOT FABRICATE DRILLED PIER REINFORCING CAGE PRIOR TO DETERMINING FINAL PIER LENGTH. MINIMUM 10'–0" EMBEDMENT INTO FIRM ALLUVIUM MATERIAL MUST BE OBTAINED, IRREGARDLESS OF WHERE TOP OF FIRM ALLUVIUM MATERIAL IS ENCOUNTERED.

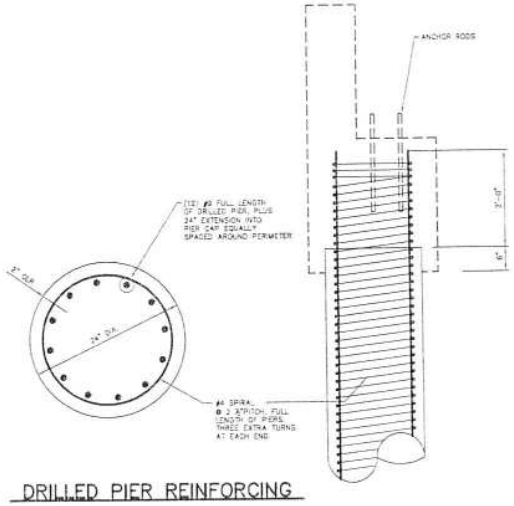

DRILLED PIER REINFORCING

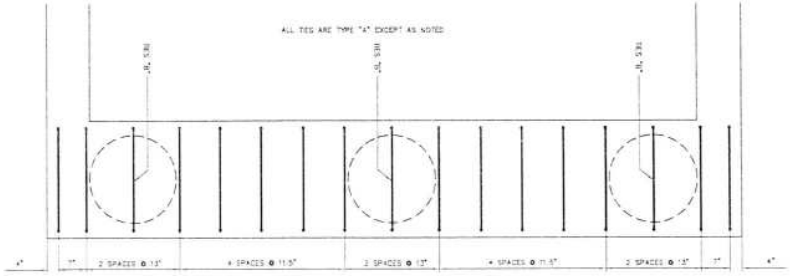

TIE SPACING PLAN

REGISTERED PROFESSIONAL ENGINEER
David G. Rogers
No. 39877
EXP 12-31-09
CIVIL
STATE OF CALIFORNIA

BIGR Manufacturing LLC
P.O. BOX 1390, GREELEY, COLORADO 80633
PHONE: (970) 356-9600 FAX: (970) 356-9621
TOLL FREE: 1-800-234-0734 www.bigrmfg.com

SARATOGA CREEK BRIDGE

ABUTMENTS

SARATOGA, CA

08-00468

DESIGN BY DGR

DRAWN BY DGR

CHECKED BY DGR

SHEET NO. 2 OF 2